我们追求卓越

We make excellence

ELT FLUID 成立于2013年，是意大利领先的螺纹插装阀和电磁比例控制阀及液压集成阀块制造商。

伊尔特液压 位于长沙，成立于2022年，是 ELT FLUID 在中国的合资公司，生产制造并销售ELT FLUID开发的所有产品。

桑特液压 位于长沙，成立于2000年，是负载控制阀和比例控制阀及螺纹插装阀集成阀块的领先制造商。

桑特液压和伊尔特液压紧密合作，不仅向客户提供产品，还向客户提供量身定制的解决方案。和客户合作开发的能力是我们成功的关键，我们经验丰富的工程师为客户量身定制解决方案，充分满足客户的期望和要求。即使是最复杂的需求也总会给出正确的答案。最新的CAD和CAM 技术使我们能够向客户提供最快速的市场服务响应，最先进的FMS生产系统使我们确保持续稳定的最高质量水平。无论大批量生产还是特别定制，从一个想法到批量产品交货，桑特液压和伊尔特液压将是您身边可靠的创新合作伙伴。

ELT FLUID founded in 2013, is one Italy leading manufacturer of screw-in cartridge valves and electro proportional control valves.

ELT FLUID (Changsha) founded in 2022, as a joint venture in China, manufacture and distribute all of products developed by ELT FLUID.

SANT HYDRAULIC located in Changsha, founded in 2000, is a leading manufacturer of load control valves, proportional control valves and hydraulic manifolds integrated with screw-in cartridge valves.

Together with ELT FLUID, SANT HYDRAULIC not only supplies products, but also provides customized solutions. The capability of co-design with customers has always proved to be our key success factor. Our experienced engineers tailor customized solutions that fulfill all possible customer wishes and requirements. They almost always know the correct answer even for the most complex requirements. The latest CAD and CAM technologies enable us to provide customers the most responsive service in the marketplace. Our most up-to-date FMS and production techniques ensure a constant and highest quality level. Whether it is for large production volumes or individual special order, SANT Hydraulic and ELT FLUID will be at your side as a reliable innovation partner from the idea to mass production delivery.

Chapters Index

1. Electric valves On-Off

2. Electro-proportional valves

3. Pressure control valves

4. Flow control valves

5. Directional control valves

6. Load control valves

7. Special solutions

8. 9. 10. Coils Standard bodies Cavity

S. Service (Emergency manual override, general conditions, technical specfica-tions)

Electric valves

Solenoid valve 2 ways on-off pilot operated
Max. Pressure: 350 bar (5.075 psi)

Poppet type, normally closed

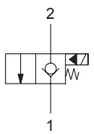

Model	Flow	Page
E08N-20	40 l/min (10,6 gpm)	1.01.001.1
E10N-20	70 l/min (18,6 gpm)	1.02.001.1
E11N-20	70 l/min (18,6 gpm)	1.06.001.1
E12N-20	150 l/min (40 gpm)	1.03.001.1
E13N-20	150 l/min (40 gpm)	1.07.001.1

Poppet type, normally open

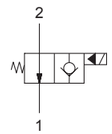

Model	Flow	Page
E08N-21	40 l/min (10,6 gpm)	1.01.002.1
E10N-21	70 l/min (18,6 gpm)	1.02.002.1
E11N-21	70 l/min (18,6 gpm)	1.06.002.1
E12N-21	150 l/min (40 gpm)	1.03.002.1
E13N-21	150 l/min (40 gpm)	1.07.002.1

Poppet type, normally closed, bidirectional

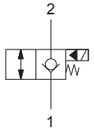

Model	Flow	Page
E08N-22	40 l/min (10,6 gpm)	1.01.003.1
E10N-22	70 l/min (18,6 gpm)	1.02.003.1
E11N-22	70 l/min (18,6 gpm)	1.06.003.1
E12N-22	110 l/min (29 gpm)	1.03.003.1
E13N-22	110 l/min (29 gpm)	1.07.003.1
E16N-22	160 l/min (42 gpm)	1.04.001.1
E20N-22	300 l/min (79 gpm)	1.05.001.1

Poppet type, normally open, bidirectional

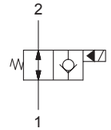

Model	Flow	Page
E08N-23	40 l/min (10,6 gpm)	1.01.004.1
E10N-23	70 l/min (18,6 gpm)	1.02.004.1
E11N-23	70 l/min (18,6 gpm)	1.06.004.1
E12N-23	110 l/min (29 gpm)	1.03.004.1
E13N-23	110 l/min (29 gpm)	1.07.004.1
E16N-23	160 l/min (42 gpm)	1.04.002.1
E20N-23	300 l/min (79 gpm)	1.05.002.1

Poppet type, normally closed

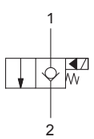

Model	Flow	Page
E08N-24	40 l/min (10,6 gpm)	1.01.005.1
E10N-24	70 l/min (18,6 gpm)	1.02.005.1
E11N-24	70 l/min (18,6 gpm)	1.06.005.1
E12N-24	150 l/min (40 gpm)	1.03.005.1
E13N-24	150 l/min (40 gpm)	1.07.005.1

Poppet type, normally open

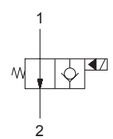

Model	Flow	Page
E08N-25	40 l/min (10,6 gpm)	1.01.006.1
E10N-25	70 l/min (18,6 gpm)	1.02.006.1
E11N-25	70 l/min (18,6 gpm)	1.06.006.1
E12N-25	150 l/min (40 gpm)	1.03.006.1
E13N-25	150 l/min (40 gpm)	1.07.006.1

Electric valves

Solenoid valve 2 ways on-off pilot operated
Max. Pressure: 350 bar (5.075 psi)

Poppet type, normally closed, bidirectional

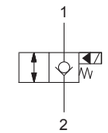

Model	Flow	Page
E08N-26	40 l/min (10,6 gpm)	1.01.007.1
E10N-26	70 l/min (18,6 gpm)	1.02.007.1
E11N-26	70 l/min (18,6 gpm)	1.06.007.1
E12N-26	150 l/min (40 gpm)	1.03.007.1
E13N-26	150 l/min (40 gpm)	1.07.007.1

Poppet type, normally open, bidirectional

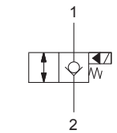

Model	Flow	Page
E08N-27	40 l/min (10,6 gpm)	1.01.008.1
E10N-27	70 l/min (18,6 gpm)	1.02.008.1
E11N-27	70 l/min (18,6 gpm)	1.06.008.1
E12N-27	150 l/min (40 gpm)	1.03.008.1
E13N-27	150 l/min (40 gpm)	1.07.008.1

Poppet type double lock, normally closed, bidirectional

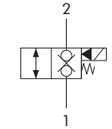

Model	Flow	Page
E08N-28	40 l/min (10,6 gpm)	1.01.009.1
E10N-28	70 l/min (18,6 gpm)	1.02.009.1
E11N-28	70 l/min (18,6 gpm)	1.06.009.1
E12N-28	110 l/min (29 gpm)	1.03.009.1
E13N-28	110 l/min (29 gpm)	1.07.009.1
E16N-28	160 l/min (42 gpm)	1.04.003.1
E20N-28	300 l/min (79 gpm)	1.05.003.1

Poppet type double lock, normally open, bidirectional

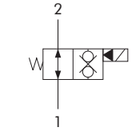

Model	Flow	Page
E08N-29	40 l/min (10,6 gpm)	1.01.010.1
E10N-29	70 l/min (18,6 gpm)	1.02.010.1
E11N-29	70 l/min (18,6 gpm)	1.06.010.1
E12N-29	110 l/min (29 gpm)	1.03.010.1
E13N-29	110 l/min (29 gpm)	1.07.010.1
E16N-29	160 l/min (42 gpm)	1.04.004.1
E20N-29	300 l/min (79 gpm)	1.05.004.1

Poppet type, normally closed, bidirectional

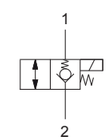

Model	Flow	Page
E08N-22K	2 l/min (0,5 gpm)	1.08.001.1

Poppet type, normally open, bidirectional

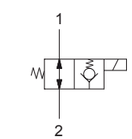

Model	Flow	Page
E08N-23K	2 l/min (0,5 gpm)	1.08.002.1

Solenoid valve 2 ways on-off direct acting
Max. pressure: 210 bar (3.045 psi)

Poppet type double lock, normally closed, bidirectional

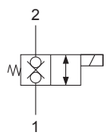

Model	Flow	Page
E08N-24K	15 l/min (4 gpm)	1.08.003.1

Solenoid valve 2 ways on-off pilot operated Low-Flow
Max. Pressure: 300 bar (4.350 psi)

Poppet type, normally closed

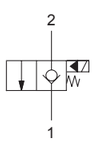

Model	Flow	Page
E08N-20L	30 l/min (8 gpm)	1.01.011.1

Poppet type, normally open

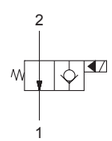

Model	Flow	Page
E08N-21L	30 l/min (8 gpm)	1.01.012.1

Poppet type, normally closed, Bidirectional

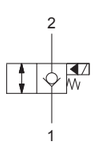

Model	Flow	Page
E08N-22L	30 l/min (8 gpm)	1.01.013.1

Poppet type, normally open, bidirectional

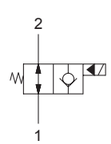

Model	Flow	Page
E08N-23L	30 l/min (8 gpm)	1.01.014.1

Solenoid valve 2 ways on-off direct acting
Max. Pressure: 210 bar (3.046 psi)

Poppet type, normally closed

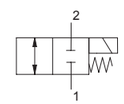

Model	Flow	Page
E08N-2S0	10 l/min (2,6 gpm)	1.09.001.1
E10N-2S0	25l/min (6,6 gpm)	1.10.001.1

Poppet type, normally open

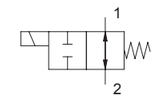

Model	Flow	Page
E08N-2S1	10 l/min (2,6 gpm)	1.09.002.1
E10N-2S1	25 l/min (6,6 gpm)	1.10.001.1

Electric valves

Solenoid valve 3 ways on-off direct acting
Max. Pressure: 210 bar (3.045 psi)

Spool type, 3 ways, 2 position

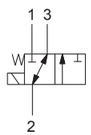

Model	Flow	Page
E08N-30	12 l/min (3,2 gpm)	1.11.001.1
E10N-30	20 l/min (5,3 gpm)	1.12.001.1

Spool type, 3 ways, 2 position

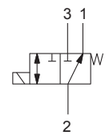

Model	Flow	Page
E08N-31	12 l/min (3,2 gpm)	1.11.002.1
E10N-31	20 l/min (5,3 gpm)	1.12.002.1
E12N-31	50 l/min (23,8 gpm)	1.13.001.1

Spool type, 3 ways, 2 position

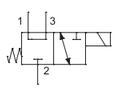

Model	Flow	Page
E08N-32	12 l/min (3,2 gpm)	1.11.003.1

Spool type, 3 ways, 2 position

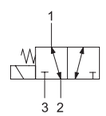

Model	Flow	Page
E08N-33	12 l/min (3,2 gpm)	1.11.004.1

Poppet type, 3 ways, 2 position

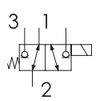

Model	Flow	Page
E10N-3T1	20 l/min (5,3 gpm)	1.12.003.1

Electric valves

Solenoid valve 4 ways on-off direct acting
Max. Pressure: 210 bar (3.045 psi)

Spool type, 4 ways, 2 position

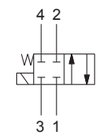

Model	Flow	Page
E08N-4A0	12 l/min (3,2 gpm)	1.15.001.1
E10N-4A0	20 l/m (4,4 gpm)	1.15.001.1

Spool type, 4 ways, 2 position

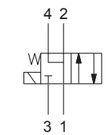

Model	Flow	Page
E08N-4B0	12 l/min (3,2 gpm)	1.14.003.1
E10N-4B0	20 l/m(4,4 gpm)	1.15.003.1

Spool type, 4 ways, 2 position

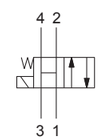

Model	Flow	Page
E08N-4C0	11 l/min (2,9 gpm)	1.14.005.1
E10N-4C0	25 l/m (6,6 gpm)	1.15.005.1

Spool type, 4 ways, 2 position

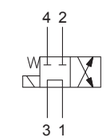

Model	Flow	Page
E08N-4D0	11 l/min (2,9 gpm)	1.14.007.1
E10N-4D0	25 l/m (6,6 gpm)	1.15.007.1

Spool type, 4 ways, 2 position

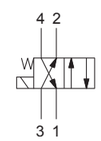

Model	Flow	Page
E08N-4X0	12 l/min (3,2 gpm)	1.14.010.1
E10N-4X0	20 l/m (5,3 gpm)	1.15.012.1

Spool type, 4 ways, 2 position

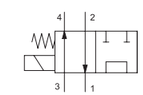

Model	Flow	Page
E10N-4E0	25 l/min (6,6 gpm)	1.15.009.1

Electric valves

Solenoid valve 4 ways on-off direct acting
Max. Pressure: 210 bar (3.045 psi)

Spool type, 4 ways, 2 position

Model	Flow	Page
E10N-4G0	25 l/min (6,6 gpm)	1.15.010.1

Spool type, 4 ways, 2 position

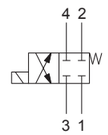

Model	Flow	Page
E08N-4A1	12 l/min (3,2 gpm)	1.14.002.1
E10N-4A1	20 l/m (4,4 gpm)	1.15.002.1

Spool type, 4 ways, 2 position

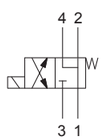

Model	Flow	Page
E08N-4B1	12 l/min (3,2 gpm)	1.14.004.1
E10N-4B1	20 l/m (4,4 gpm)	1.15.004.1

Spool type, 4 ways, 2 position

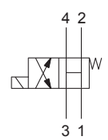

Model	Flow	Page
E08N-4C1	11 l/min (2,9 gpm)	1.14.006.1
E10N-4C1	25 l/min (6,6 gpm)	1.15.006.1

Spool type, 4 ways, 2 position

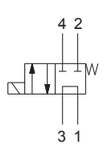

Model	Flow	Page
E08N-4D1	11 l/min (2,9 gpm)	1.14.008.1
E10N-4D1	25 l/min (6,6 gpm)	1.15.008.1

Spool type, 4 ways, 2 position

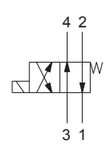

Model	Flow	Page
E08N-4X1	12 l/min (3,2 gpm)	1.14.011.1
E10N-4X1	20 l/m (5,3 gpm)	1.15.013.1

Hydraulic symbols Product selection

Electric valves

Solenoid valve 4 ways on-off direct acting
Max. Pressure: 210 bar (3.045 psi)

Spool type, 4 ways, 2 position

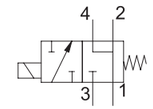

Model	Flow	Page
E08N-4U1	12 l/min (3,2 gpm)	1.14.009.1

Spool type, 4 ways, 2 position

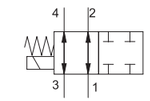

Model	Flow	Page
E10N-4R0	20 l/min (5,3 gpm)	1.15.011.1

Spool type, 4 ways, 3 position, Closed Center

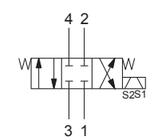

Model	Flow	Page
E08N-4A	12 l/min (3,2 gpm)	1.16.001.1
E10N-4A	20 l/m (5,3 gpm)	1.17.001.1

Spool type, 4 ways, 3 position, "Motor Spool"

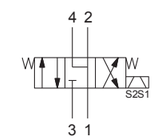

Model	Flow	Page
E08N-4B	12 l/min (3,2 gpm)	1.16.002.1
E10N-4B	20 l/m (5,3 gpm)	1.17.002.1

Spool type, 4 ways, 3 position, Open Center

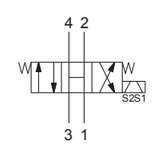

Model	Flow	Page
E08N-4C	11 l/min (2,9 gpm)	1.16.003.1
E10N-4C	25 l/m (6,6 gpm)	1.17.003.1

Spool type, 4 ways, 3 position, Tandem Center

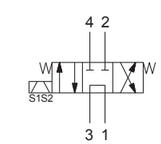

Model	Flow	Page
E08N-4D	11 l/min (2,9 gpm)	1.16.004.1
E10N-4D	25 l/min (6,6 gpm)	1.17.004.1

TCGE-0524-IR00

Electric valves

Solenoid valve 4 ways on-off direct acting
Max. Pressure: 210 bar (3.045 psi)

Spool type, 4 ways, 3 position

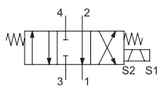

Model	Flow	Page
E08N-4N	12 l/min (3,2 gpm)	1.16.005.1

Solenoid valve 4 ways on-off direct acting
Max. Pressure: 350 bar (5.075 psi)

Spool type, 4 ways, 3 position, Open Center

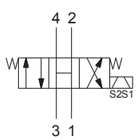

Model	Flow	Page
E10NH-4C	40 l/m (10,6 gpm)	1.17.005.1

Spool type, 4 ways, 3 position, Tandem Center

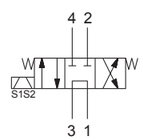

Model	Flow	Page
E10NH-4D	40 l/m (10,6 gpm)	1.17.006.1

Solenoid valve 5 ways on-off direct acting
Max. Pressure: 250 bar (3.625 psi)

Spool type, 5 ways, 3 position, Closed Center

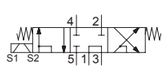

Model	Flow	Page
E08N-5M	13 l/m (3,5 gpm)	1.18.001.1

Spool type, 5 ways, 3 position, "Motor Spool"

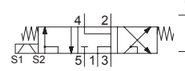

Model	Flow	Page
E08N-5W	13 l/m (3,5 gpm)	1.18.002.1

Proportional Valves

Electro proportional valve 2 ways pilot operated
Max. Pressure: 210 bar (3.045 psi)

Poppet pilot operated, normally closed

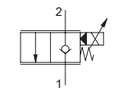

Model	Flow	Page
E08P-20	20 l/min (5,3 gpm)	2.01.001.1
E08PH-20	40 l/min (10,7 gpm	2.01.002.1
E10P-20	60 l/min (15,8 gpm)	2.02.001.1
E12P-20	90 l/min (23,7 gpm)	2.03.001.1
E16P-20	90 l/min (23,7 gpm)	2.04.001.1

Poppet pilot operated, normally open

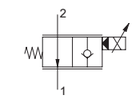

Model	Flow	Page
E08P-21	20 l/min (7,9 gpm)	2.01.003.1
E10P-21	60 l/min (15,8 gpm)	2.02.002.1
E12P-21	90 l/min (23,7 gpm)	2.03.002.1

Electro proportional valve 2 ways 2 positons direct acting
Max. Pressure: 210 bar (3.045 psi)

Spool type, Normally closed

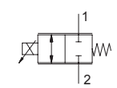

Model	Flow	Page
E08P-2S0	10 l/min (2,64 gpm)	2.05.001.1
E10P-2S0	40 l/min (10,6 gpm)	2.06.001.1

Electro proportional valve 4 ways 3 positons direct acting
Max. Pressure: 210 bar (3.045 psi)

Proportional, Spool type

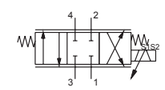

Model	Flow	Page
E08P-4A	12 l/min (3,2 gpm)	2.07.001.1
E10P-4A	20 l/min (5,3 gpm)	2.08.001.1

Proportional, Spool type

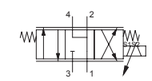

Model	Flow	Page
E08P-4B	12 l/min (3,2 gpm)	2.07.002.1
E10P-4B	20 l/min (5,3 gpm)	2.08.002.1

Electro proportional pressure control valve
Max. Pressure: 350 bar (5.075 psi)

Relief valve, direct acting, poppet type, increasing pressure with increasing current

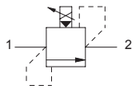

Model	Flow	Page
PE08MP-20	2 l/min (0,5 gpm)	2.09.001.1

Relief valve, direct acting, poppet type, increasing pressure with increasing current

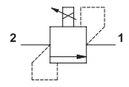

Model	Flow	Page
PE08MP-21	2 l/min (0,5 gpm)	2.09.002.1

Relief valve, pilot operated, spool type, increasing pressure with increasing current

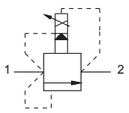

Model	Flow	Page
PE10MP-22	100 l/min (26,4 gpm)	2.10.001.1

Relief valve, differential area, poppet type, increasing pressure with increasing current

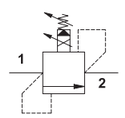

Model	Flow	Page
PE10MP-27	100 l/min (26,4 gpm)	2.10.002.1

Electro proportional pressure reducing/relieving valve
Max. Pressure: 50 bar (725 psi)

Differential area, increasing pressure with increasing current

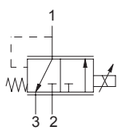

Model	Flow	Page
PE08RP-3X2	4 l/min (1,05 gpm)	2.11.001.1

Electro proportional spool valve, free way, flow control
Max. Pressure: 300 bar (4.350 psi)

Differential area, increasing pressure with increasing current

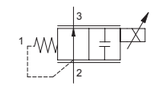

Model	Flow	Page
FE10PS-33	30 l/min (7,92 gpm)	2.12.001.1

Differential area, increasing pressure with increasing current

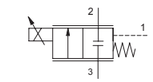

Model	Flow	Page
FE10PS-34	30 l/min (7,92 gpm)	2.12.002.1

Differential area, increasing pressure with increasing current

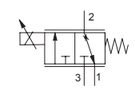

Model	Flow	Page
FE10PS-35	30 l/min (7,92 gpm)	2.12.003.1

Proportional Valves

Electro proportional compensated 2 way flow control valves
Max. Pressure: 300 bar (4.350 psi)

Unidirectional pressure compensated, spool type, normally closed

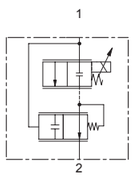

Model	Flow	Page
FE10PC-22	30 l/min (7,92 gpm)	2.13.001.1
FE12PC-22	50 l/min (13,2 gpm)	2.14.001.1

Unidirectional pressure compensated, spool type, normally open

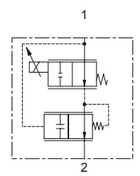

Model	Flow	Page
FE10PC-27	30 l/min (7,92 gpm)	2.13.002.1
FE12PC-27	50 l/min (13,2 gpm)	2.14.002.1

Electro proportional compensated 3 way flow control valves
Max. Pressure: 300 bar (4.350 psi)

Unidirectional pressure compensated, spool type, normally closed

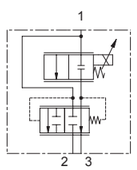

Model	Flow	Page
FE08PC-32	20 l/min (5.3 gpm)	2.15.001.1
FE10PC-32	30 l/min (7,92 gpm)	2.16.001.1
FE12PC-32	55 l/min (14,5 gpm)	2.17.001.1

Unidirectional pressure compensated, spool type, normally open

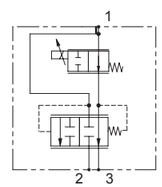

Model	Flow	Page
FE08PC-37	20 l/min (5.3 gpm)	2.15.002.1

Pressure Valves

Pressure control valves
Max. Pressure: 350 bar (5.075 psi)

Relief valve, direct acting poppet type

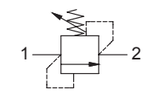

Model	Flow	Page
P06M-20	15 l/min (3,96 gpm)	3.01.001.1
P08M-20	20 l/min (5,3 gpm)	3.02.001.1

Relief valve, direct acting, poppet type

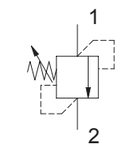

Model	Flow	Page
P081M-20	40 l/min (10,55 gpm)	3.02.002.1

Relief valve, direct acting, differential area, poppet type

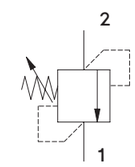

Model	Flow	Page
P08M-21	30 l/min (7,9 gpm)	3.02.003.1
P10M-21	70 l/min (18,5 gpm)	3.03.001.1

Relief valve, pilot operated, spool type.

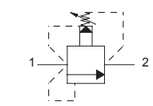

Model	Flow	Page
P10M-22	100 l/min (26,4 gpm)	3.03.002.1

Bi-directional relief valve, direct acting, differential area, poppet type

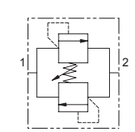

Model	Flow	Page
P10M-23	70 l/min (18,7 gpm)	3.03.003.1

Pressure Valves

Pressure control valves
Max. Pressure: 350 bar (5.075 psi)

Pressure reducing/relieving, differential area, spool type

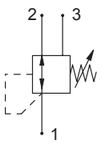

Model	Flow	Page
P08R-32	12 l/min (3,17 gpm)	3.04.001.1
P10R-32	30 l/min (7,93 gpm)	3.05.002.1

Pressure reducing/relieving, pilot operated spool type
Max Pressure 300 bar (3.351 psi)

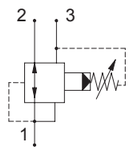

Model	Flow	Page
P10R-31	50 l/min (13,2 gpm)	3.05.001.1

Sequence valve, direct acting, normally closed, internal pilot
Max. Pressure 210 bar (3.046 psi)

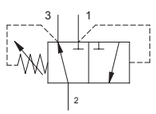

Model	Flow	Page
P10S-35	30 l/min (7,93 gpm)	3.06.001.1

Sequence valve, direct acting, normally closed, internal pilot

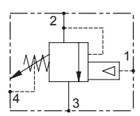

Model	Flow	Page
P10U-40	30 l/min (7,93 gpm)	3.07.001.1

Flow control valves

Flow control valve 2 way
Max. Pressure: 350 bar (5.075 psi)

Bidirectional, needle valve

Model	Flow	Page
F08S-20	40 l/min (10,7 gpm)	4.01.001.1
F10S-20	60 l/min (15,9 gpm)	4.02.001.1
F12S-20	110 l/min (29 gpm)	4.03.001.1

Unidirectional, needle, valve

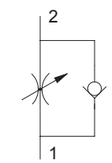

Model	Flow	Page
F08S-21	40 l/min (10,7 gpm)	4.01.002.1
F10S-21	60 l/min (15,9 gpm)	4.02.002.1

Manual operated pressure compensated 2 way flow control valves
Max. Pressure: 300 bar (4.350 psi)

Unidirectional pressure compensated

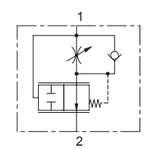

Model	Flow	Page
F10C-22	30 l/min (7,9 gpm)	4.06.001.1
F12C-22	50 l/min (13,2 gpm)	4.07.001.1

Manual operated pressure compensated 3 way flow control valves
Max. Pressure: 300 bar (4.350 psi)

Unidirectional pressure compensated

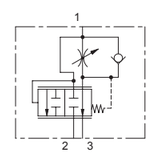

Model	Flow	Page
F10C-32	30 l/min (7,9 gpm)	4.08.001.1
F12C-32	60 l/min (15,9 gpm)	4.09.001.1

Fix setting pressure compensated 2 way flow control valve
Max. Pressure: 300 bar (4.350 psi)

Unidirectional pressure compensated

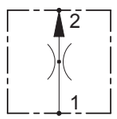

Model	Flow	Page
F08C-21F	7,5 l/min (2 gpm)	4.04.001.1
F10C-21F	17 l/min (4,5 gpm)	4.05.001.1

Fix setting pressure compensated 3 way flow control valve
Max. Pressure: 300 bar (4.350 psi)

Unidirectional pressure compensated

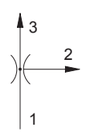

Model	Flow	Page
F10C-32F	22 l/min (5,8 gpm)	4.08.002.1
F12C-32F	50 l/min (13,2 gpm)	4.09.002.1

Manual operated pressure compensated fix orifice 3 way flow control valves
Max. Pressure: 300 bar (4.350 psi)

Unidirectional pressure compensated

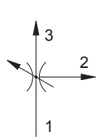

Model	Flow	Page
F10C-33	23 l/min (6,07 gpm)	4.08.003.1

Flow divider and combiner
Max. Pressure: 350 bar (5.075 psi)

Flow divider and combiner

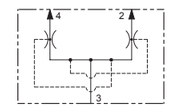

Model	Flow	Page
FD10C-33	57 l/min (7,5 gpm)	4.10.001.1
FD12C-33	90 l/min (15,05 gpm)	4.11.001.1
FD16C-33	90 l/min (15,05 gpm)	4.12.001.1

Flow control valve 3 way piloted
Max. Pressure: 350 bar (5.075 psi)

Logic element, spool type, normally closed

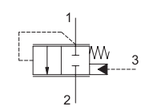

Model	Flow	Page
L10S-3C00-0	70 l/min (18,7 gpm)	4.14.002.1
L12S-3C00-0	150 l/min (18,7 gpm)	4.15.002.1
L16S-3C00-0	200 l/min (52,8 gpm)	4.16.001.1

Logic element, spool type, normally closed

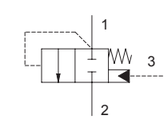

Model	Flow	Page
L08S-3300-0	30 l/min (7,9 gpm)	4.13.001.1

Logic element, spool type, normally open

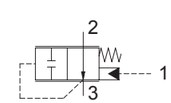

Model	Flow	Page
L08S-3301-4	20 l/min (18,7 gpm)	4.13.002.1
L10S-3301-4	40 l/min (18,7 gpm)	4.14.001.1
L12S-3301-4	40 l/min (18,7 gpm)	4.15.001.1

Flow control valve 3 way piloted
Max. Pressure: 350 bar (5.075 psi)

Logic element, poppet type

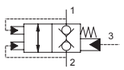

Model	Flow	Page
L10P-3C00-3	70 l/min (18,5 gpm)	4.14.003.1
L16P-3C00-3	200 l/min (52,8 gpm)	4.16.002.1

Logic element 3 way,pilot operated low side oil hydrostatic washing valve
Max. Pressure: 350 bar (5.075 psi)

Logic element, spool type, closed center

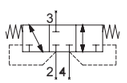

Model	Flow	Page
L10S-3400-7	30 l/min (7,9 gpm)	4.17.002.1

Logic element 4 way, pilot operated
Max. Pressure: 300 bar (4,350 psi)

Logic element spool type

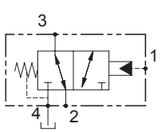

Model	Flow	Page
L10S-4401-3	40 l/min(10,5 gpm)	4.17.003.1

Logic element 4 way, priority on demand
Max. Pressure: 250 bar (3.625 psi)

Logic element, spool type

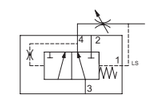

Model	Flow	Page
L10S-4401-8	40 l/min (10,5 gpm)	4.17.004.1

Logic element 4 way, dynamic priority on demand
Max. Pressure: 250 bar (3.625 psi)

Logic element, spool type

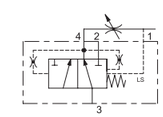

Model	Flow	Page
L10S-4401-9	40 l/min (10,5 gpm)	4.17.005.1

Directional valves
Max. Pressure: 350 bar (5.075 psi)

Insert check valve, poppet type

Model	Flow	Page
R01S-50	10 l/min (2,7 gpm)	5.01.001.1

Insert check valve, poppet type

Model	Flow	Page
R01S-51	10 l/min (2,7 gpm)	5.01.002.1

Check valve, ball type

Model	Flow	Page
R06S-11	20 l/min (5,4 gpm)	5.02.001.1

Check valve, poppet type

Model	Flow	Page
R08S-20	40 l/min (10,7 gpm)	5.03.001.1
R10S-20	70 l/min (18,7 gpm)	5.04.001.1
R12S-20	110 l/min (29 gpm)	5.05.001.1
R16S-20	160 l/min (42 gpm)	5.06.001.1
R20S-20	300 l/min (79 gpm)	5.07.001.1

Check valve, poppet type

Model	Flow	Page
R08S-21	40 l/min (10,7 gpm)	5.03.002.1
R10S-21	70 l/min (18,7 gpm)	5.04.002.1
R12S-21	110 l/min (29 gpm)	5.05.002.1
R16S-21	160 l/min (42 gpm)	5.06.002.1
R20S-21	300 l/min (79 gpm)	5.07.002.1

Directional valves
Max. Pressure: 350 bar (5.075 psi)

Pilot operated valve, poppet type

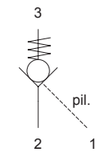

Model	Flow	Page
R08PA-10	30 l/min (7,9 gpm)	5.08.001.1

Insert shuttle valve, poppet type

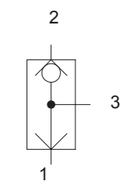

Model	Flow	Page
SPB 1/8"G	4 l/min (1,05 gpm)	5.09.001.1

Shuttle valve, poppet type

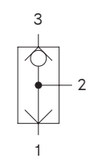

Model	Flow	Page
SL08C-1	30 l/min (7,9 gpm)	5.10.001.1

Load Valves

Load control valves
Max. Pressure: 350 bar (5.075 psi)

Counter balance valve, direct acting, poppet type

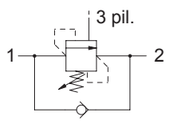

Model	Flow	Page
C08NL	15 l/min (4 gpm)	6.01.002.1
C08N	40 l/min (10 gpm)	6.01.001.1
C10N	60 l/min (15,9 gpm)	6.02.001.1

Counter balance valve, direct acting, poppet type, relief compensated

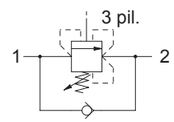

Model	Flow	Page
C10S	60 l/min (15,9 gpm)	6.02.002.1

Counter balance valve, direct acting, poppet type, fully compensated

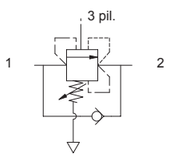

Model	Flow	Page
C08C	40 l/min (10 gpm)	6.01.003.1

Special solutions

Special Solutions
Max. Pressure: 50 bar (725 psi)

Double proportional pressure reducing valve block

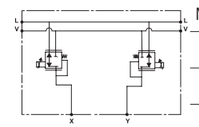

Model	Flow	Page
MP01-A	4 l/min (1,06 gpm)	7.01.001.1

Double proportional pressure reducing valve block

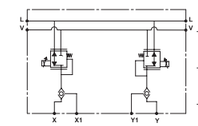

Model	Flow	Page
MP01-B	4 l/min (1,06 gpm)	7.02.001.1

Products

Code:	page
C08C	6.01.003.1-2
C08N	6.01.001.1-2
C08NL	6.01.002.1-2
C10N	6.02.001.1-2
C10S	6.02.002.1-2
E08N-20	1.01.001.1-2
E08N-20L	1.01.011.1-2
E08N-21	1.01.002.1-2
E08N-21L	1.01.012.1-2
E08N-22	1.01.003.1-2
E08N-22K	1.08.001.1-2
E08N-22L	1.01.013.1-2
E08N-23	1.01.004.1-2
E08N-23K	1.08.002.1-2
E08N-23L	1.01.014.1-2
E08N-24	1.01.005.1-2
E08N-24K	1.08.003.1-2
E08N-25	1.01.006.1-2
E08N-26	1.01.007.1-2
E08N-27	1.01.008.1-2
E08N-28	1.01.009.1-2
E08N-29	1.01.010.1-2
E08N-2S0	1.09.001.1-2
E08N-2S1	1.09.002.1-2
E08N-30	1.11.001.1-2
E08N-31	1.11.002.1-2
E08N-32	1.11.003.1-2
E08N-33	1.11.004.1-2
E08N-4A	1.16.001.1-2
E08N-4A0	1.15.001.1-2

Code:	page
E08N-4A1	1.14.002.1-2
E08N-4B	1.16.002.1-2
E08N-4B0	1.14.003.1-2
E08N-4B1	1.14.004.1-2
E08N-4C	1.16.003.1-2
E08N-4C0	1.14.005.1-2
E08N-4C1	1.14.006.1-2
E08N-4D	1.16.004.1-2
E08N-4D0	1.14.007.1-2
E08N-4D1	1.14.008.1-2
E08N-4N	1.16.005.1-2
E08N-4U1	1.14.009.1-2
E08N-4X0	1.14.010.1-2
E08N-4X1	1.14.011.1-2
E08N-5M	1.18.001.1-2
E08N-5W	1.18.002.1-2
E08P-20	2.01.001.1-2
E08P-21	2.01.003.1-2
E08P-2S0	2.05.001.1-2
E08P-4A	2.07.001.1-2
E08P-4B	2.07.002.1-2
E08PH-20	2.01.002.1-2
E10N-20	1.02.001.1-2
E10N-21	1.02.002.1-2
E10N-22	1.02.003.1-2
E10N-23	1.02.004.1-2
E10N-24	1.02.005.1-2
E10N-25	1.02.006.1-2
E10N-26	1.02.007.1-2
E10N-27	1.02.008.1-2

Code:	page
E10N-28	1.02.009.1-2
E10N-29	1.02.010.1-2
E10N-2S0	1.10.001.1-2
E10N-2S1	1.10.001.1-2
E10N-30	1.12.001.1-2
E10N-31	1.12.002.1-2
E10N-3T1	1.12.003.1-2
E10N-4A	1.17.001.1-2
E10N-4A0	1.15.001.1-2
E10N-4A1	1.15.002.1-2
E10N-4B	1.17.002.1-2
E10N-4B0	1.15.003.1-2
E10N-4B1	1.15.004.1-2
E10N-4C	1.17.003.1-2
E10N-4C0	1.15.005.1-2
E10N-4C1	1.15.006.1-2
E10N-4D	1.17.004.1-2
E10N-4D0	1.15.007.1-2
E10N-4D1	1.15.008.1-2
E10N-4E0	1.15.009.1-2
E10N-4G0	1.15.010.1-2
E10N-4R0	1.15.011.1-2
E10N-4X0	1.15.012.1-2
E10N-4X1	1.15.013.1-2
E10NH-4C	1.17.005.1-2
E10NH-4D	1.17.006.1-2
E10P-20	2.02.001.1-2
E10P-21	2.02.002.1-2
E10P-2S0	2.06.001.1-2
E10P-4A	2.08.001.1-2

Code:	page
E10P-4B	2.08.002.1-2
E11N-20	1.06.001.1-2
E11N-21	1.06.002.1-2
E11N-22	1.06.003.1-2
E11N-23	1.06.004.1-2
E11N-24	1.06.005.1-2
E11N-25	1.06.006.1-2
E11N-26	1.06.007.1-2
E11N-27	1.06.008.1-2
E11N-28	1.06.009.1-2
E11N-29	1.06.010.1-2
E12N-20	1.03.001.1-2
E12N-21	1.03.002.1-2
E12N-22	1.03.003.1-2
E12N-23	1.03.004.1-2
E12N-24	1.03.005.1-2
E12N-25	1.03.006.1-2
E12N-26	1.03.007.1-2
E12N-27	1.03.008.1-2
E12N-28	1.03.009.1-2
E12N-29	1.03.010.1-2
E12N-31	1.13.001.1-2
E12P-20	2.03.001.1-2
E12P-21	2.03.002.1-2
E13N-20	1.07.001.1-2
E13N-21	1.07.002.1-2
E13N-22	1.07.003.1-2
E13N-23	1.07.004.1-2
E13N-24	1.07.005.1-2
E13N-25	1.07.006.1-2

Products

Code:	page
E13N-26	1.07.007.1-2
E13N-27	1.07.008.1-2
E13N-28	1.07.009.1-2
E13N-29	1.07.010.1-2
E16N-22	1.04.001.1-2
E16N-23	1.04.002.1-2
E16N-28	1.04.003.1-2
E16N-29	1.04.004.1-2
E16P-20	2.04.001.1-2
E20N-22	1.05.001.1-2
E20N-23	1.05.002.1-2
E20N-28	1.05.003.1-2
E20N-29	1.05.004.1-2
F08C-21F	4.04.001.1-2
F08S-20	4.01.001.1-2
F08S-21	4.01.002.1-2
F10C-21F	4.05.001.1-2
F10C-22	4.06.001.1-2
F10C-32	4.08.001.1-2
F10C-32F	4.08.002.1-2
F10C-33	4.08.003.1-2
F10S-20	4.02.001.1-2
F10S-21	4.02.002.1-2
F12C-22	4.07.001.1-2
F12C-32	4.09.001.1-2
F12C-32F	4.09.002.1-2
F12S-20	4.03.001.1-2
FD10C-33	4.10.001.1-2
FD12C-33	4.11.001.1-2
FD16C-33	4.12.001.1-2

Code:	page
FE08PC-32	2.15.001.1-2
FE08PC-37	2.15.002.1-2
FE10PC-22	2.13.001.1-2
FE10PC-27	2.13.002.1-2
FE10PC-32	2.16.001.1-2
FE10PS-33	2.12.001.1-2
FE10PS-34	2.12.002.1-2
FE10PS-35	2.12.003.1-2
FE12PC-22	2.14.001.2-2
FE12PC-27	2.14.002.1-2
FE12PC-32	2.17.001.1-2
L08S-3300-0	4.13.001.1-2
L08S-3301-4	4.13.002.1-2
L10P-3C00-3	4.14.003.1-2
L10S-3301-4	4.14.001.1-2
L10S-3400-6	4.17.001.1-2
L10S-3400-7	4.17.002.1-2
L10S-4401-3	4.17.003.1-2
L10S-4401-8	4.17.004.1-2
L10S-4401-9	4.17.005.1-2
L10S-3C00-0	4.14.002.1-2
L12S-3301-4	4.15.001.1-2
L12S-3C00-0	4.15.002.1-2
L16P-3C00-3	4.16.002.1-2
L16S-3C00-0	4.16.001.1-2
MP01-A	7.01.001.1-2
MP01-B	7.02.001.1-2
P08R-32	3.04.001.1-2
P10R-31	3.05.001.1-2
P10R-32	3.05.002.1-2

Code:	page
P06M-20	3.01.001.1-2
P08M-20	3.02.001.1-2
P08M-21	3.02.003.1-2
P08R-32	3.04.001.1-2
P081M-20	3.02.002.1-2
P10M-21	3.03.001.1-2
P10M-22	3.03.002.1-2
P10M-23	3.03.003.1-2
P10R-31	3.05.001.1-2
P10R-32	3.05.002.1-2
P10S-35	3.06.001.1-2
P10U-40	3.07.001.1-2
PE08MP-20	2.09.001.1-2
PE08MP-21	2.09.002.1-2
PE08RP-3X2	2.11.001.1-2
PE10MP-22	2.10.001.1-2
PE10MP-27	2.10.002.1-2
R01S-50	5.01.001.1-2
R01S-51	5.01.002.1-2
R06S-11	5.02.001.1-2
R08PA-10	5.08.001.1-2
R08S-20	5.03.001.1-2
R08S-21	5.03.002.1-2
R10S-20	5.04.001.1-2
R10S-21	5.04.002.1-2
R12S-20	5.05.001.1-2
R12S-21	5.05.002.1-2
R16S-20	5.06.001.1-2
R16S-21	5.06.002.1-2
R20S-20	5.07.001.1-2

Code:	page
R20S-21	5.07.002.1-2
SL08C-1	5.10.001.1-2
SPB 1/8"G	5.09.001.1-2

Electric valves On-Off 1.

Electro-proportional valves 2.

Pressure control valves 3.

Flow control valves 4.

Directional control valves 5.

Load control valves 6.

Special solutions 7.

Coils, standard bodies, cavities 8. 9. 10.

Service (Emergency manual override, general conditions, technical specifications) S.

E08N-20

Solenoid valve 2 ways 2 positions, poppet pilot operated, normally closed

Description

Electric cartridge valve on/off designed to hold the load or block flow at high pressure application, where low leakage is requested.

Operation mode

COIL NOT POWERED: the valve in closed position blocks the flow from 2 to 1.
COIL POWERED: the valve allows flow from 2 to 1.

GENERAL DATA

Weight without coil: 0,16 Kg (0,36 lbs).
Ambient temperature range: -30 °C a 60 °C with standard seals (NBR).
Max. proof pressure: 420 bar (6.090 psi).
Flow Max: 40 l/min (10,7 gpm).
Cartridge materials: high strength steel, internal parts hardened and grinding.

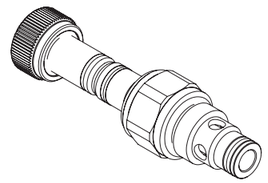

Drawing

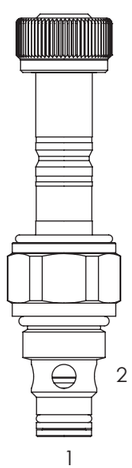

Hydraulic symbol

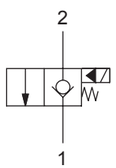

Pressure drop

Oil viscosity: 46 cSt (217 SSU) Fluid temperature: 40 °C

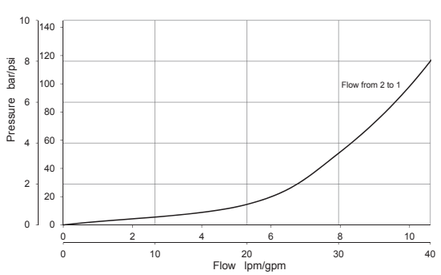

TECHNICAL DATA

HYDRAULIC

Max. working pressure:	350 bar (5.075 psi)
Flow rate:	min 0,5 l/min (0,1 gpm) max 40 l/min (10,7 gpm)
Fluid: *Viscosity:*	Mineral based oil From 15cSt to 250 cSt
Leakage:	0,25 cc/min (5 drops/min) P max. 350 bar (5.075 psi)
Standard seals:	O-ring NBR Back up ring PTFE
Cavity:	SCN0820
Installation torque:	30 Nm
Coil nut torque:	2 Nm
Max contamination level:	NAS 8 ISO 4406 19/17/14
Fluid temperature range:	From -20 °C to +80 °C
Fatigue cycle life:	1.000.000 cycle at 350 bar
Seal kit std.:	5AG0024

ELECTRIC

Type of voltage:	DC
Insulation index:	H
Nominal voltage:	+/- 10 %
Power at 20 °C:	20,5 W
ED:*	100% with ambient temperature range -20 °C +40 °C
Coil code: *(see page 9.01.002)*	S130-20S

**Note:* For temperature or special conditions contact our sales department.

E08N-20

Inches
Millimeters

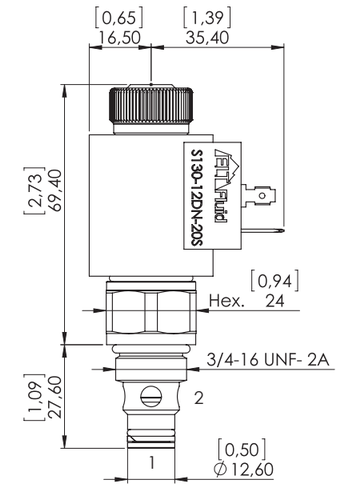

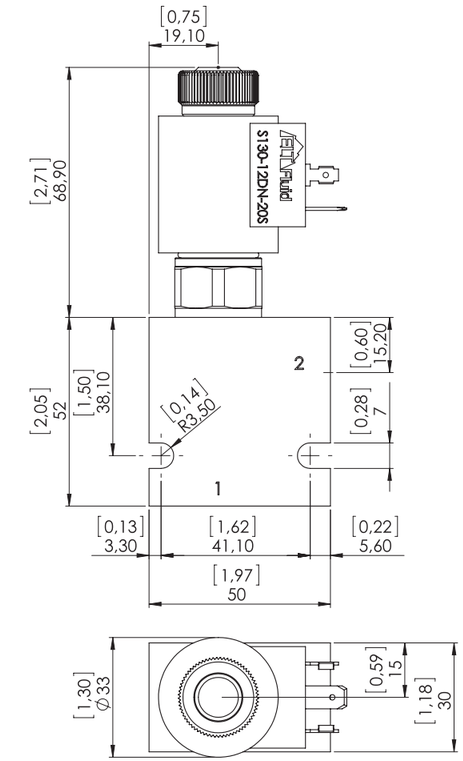

STANDARD HOUSING

Ordering code:	See page 9.02.001
Material:*	Aluminium/Steel Max working pressure for aluminum body: 210 bar Max working pressure for steel body: 350 bar

**Note:* To correctly select the material, in relation to application, see page S.003.

Ordering code

E08N-20 - -

Seals
- None (std. NBR)
- **Y**- Polyurethane
- For other options contact Sales dept.

*Options**
- None (std. without override)
- **T**- Pull
- **S**- Screw out

Connector
- **DN**- Din
- **DU**- Deutsch
- **AM**- Amp Junior

Voltage
- None (std. without coil)
- **12**- Vdc
- **24**- Vdc

Material std. housing
- **A**- Aluminium
- **S**- Steel

Housing size ports
- None (std. only cartridge)
- **2B**- 1/4" BSP
- **3B**- 3/8" BSP
- **2S**- SAE 6
- **3S**- SAE 8

**Note:* Information about manual override is available at page S.001

E08N-21

Solenoid valve 2 ways 2 positions, poppet pilot operated, normally open

Description

Electric cartridge valve on/off designed to hold the load or block flow at high pressure application, where low leakage is requested.

Operation mode

COIL NOT POWERED: the valve allows flow from 2 to 1.
COIL POWERED: the valve in closed position blocks the flow from 2 to 1.

GENERAL DATA

Weight without coil: 0,16 Kg (0,36 lbs).
Ambient temperature range: -30 °C a 60 °C with standard seals (NBR).
Max. proof pressure: 420 bar (6.090 psi).
Flow Max: 40 l/min (10,7 gpm).
Cartridge materials: high strength steel, internal parts hardened and grinding.

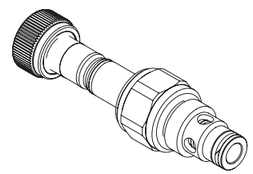

Drawing

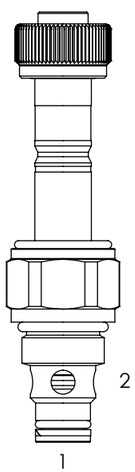

Hydraulic symbol

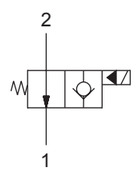

Pressure drop

Oil viscosity: 46 cSt (217 SSU) Fluid temperature: 40 °C

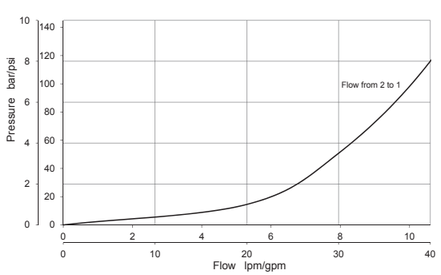

TECHNICAL DATA

HYDRAULIC

Max. working pressure:	350 bar (5.075 psi)
Flow rate:	min 0,5 l/min (0,1 gpm) max 40 l/min (10,7 gpm)
Fluid: *Viscosity:*	Mineral based oil From 15cSt to 250 cSt
Leakage:	0,25 cc/min (5 drops/min) P max. 350 bar (5.075 psi)
Standard seals:	O-ring NBR Back up ring PTFE
Cavity:	SCN0820
Installation torque:	30 Nm
Coil nut torque:	2 Nm
Max contamination level:	NAS 8 ISO 4406 19/17/14
Fluid temperature range:	From -20 °C to +80 °C
Fatigue cycle life:	1.000.000 cycle at 350 bar
Seal kit std.:	5AG0024

ELECTRIC

Type of voltage:	DC
Insulation index:	H
Nominal voltage:	+/- 10 %
Power at 20 °C:	20,5 W
ED:*	100% with ambient temperature range -20 °C +40 °C
Coil code: *(see page 9.01.002)*	S130-20S

**Note:* For temperature or special conditions contact our sales department.

E08N-21

Inches
Millimeters

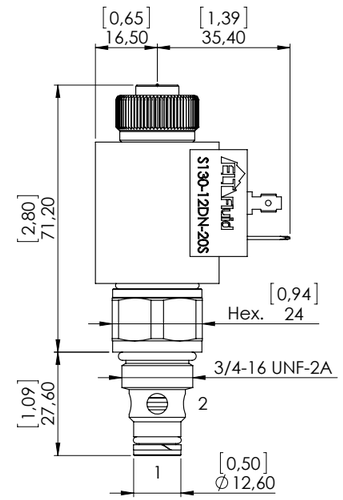

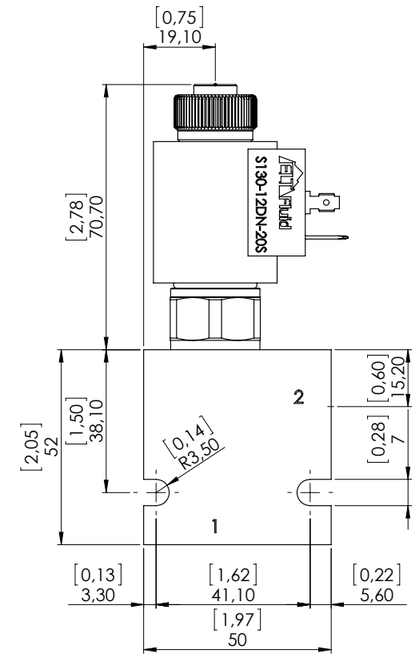

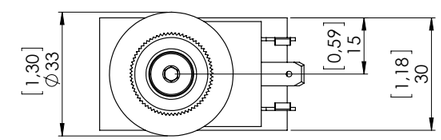

STANDARD HOUSING

Ordering code:	See page 9.02.001
Material:*	Aluminium/Steel Max working pressure for aluminum body: 210 bar Max working pressure for steel body: 350 bar

**Note:* To correctly select the material, in relation to application, see page S.003.

Ordering code

E08N-21 - -

Seals
- None (std. NBR)
- **Y**- Polyurethane
- For other options contact Sales dept.

*Options**
- None (std. without override)
- **P**- Push
- **PT**- Push and twist
- **SV**- Screw in

Connector
- **DN**- Din
- **DU**- Deutsch
- **AM**- Amp Junior

Voltage
- None (std. without coil)
- **12**- Vdc
- **24**- Vdc

Material std. housing
- **A**- Aluminium
- **S**- Steel

Housing size ports
- None (std. only cartridge)
- **2B**- 1/4" BSP
- **3B**- 3/8" BSP
- **2S**- SAE 6
- **3S**- SAE 8

**Note:* Information about manual override is available at page S.001

E08N-22

Solenoid valve 2 ways 2 positions, poppet pilot operated, normally closed

Description

Electric cartridge valve on/off designed to hold the load or block flow at high pressure application, where low leakage is requested.

Operation mode

COIL NOT POWERED: the valve in closed position blocks the flow from 2 to 1.
COIL POWERED: the valve allows flow in both directions.
From 2 to 1 and from 1 to 2.

GENERAL DATA

Weight without coil: 0,16 Kg (0,36 lbs).
Ambient temperature range: -30 °C a 60 °C with standard seals (NBR).
Max. proof pressure: 420 bar (6.090 psi).
Flow Max: 40 l/min (10,7 gpm).
Cartridge materials: high strength steel, internal parts hardened and grinding.

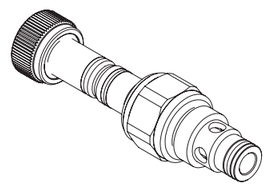

Drawing

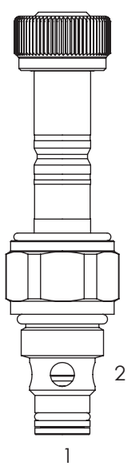

Hydraulic symbol

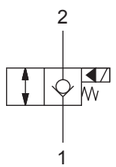

Pressure drop

Oil viscosity: 46 cSt (217 SSU) Fluid temperature: 40 °C

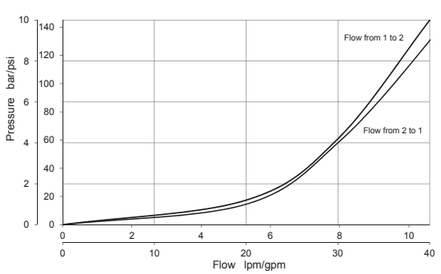

TECHNICAL DATA

HYDRAULIC

Max. working pressure:	350 bar (5.075 psi)
Flow rate:	min 0,5 l/min (0,1 gpm) max 40 l/min (10,7 gpm)
Fluid: *Viscosity:*	Mineral based oil From 15cSt to 250 cSt
Leakage:	0,25 cc/min (5 drops/min) P max. 350 bar (5.075 psi)
Standard seals:	O-ring NBR Back up ring PTFE
Cavity:	SCN0820
Installation torque:	30 Nm
Coil nut torque:	2 Nm
Max contamination level:	NAS 8 ISO 4406 19/17/14
Fluid temperature range:	From -20 °C to +80 °C
Fatigue cycle life:	1.000.000 cycle at 350 bar
Seal kit std.:	5AG0024

ELECTRIC

Type of voltage:	DC
Insulation index:	H
Nominal voltage:	+/- 10 %
Power at 20 °C:	20,5 W
ED:*	100% with ambient temperature range -20 °C +40 °C
Coil code: *(see page 9.01.002)*	S130-20S

**Note:* For temperature or special conditions contact our sales department.

E08N-22

Inches
Millimeters

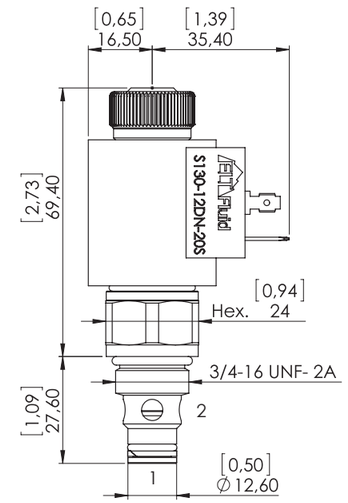

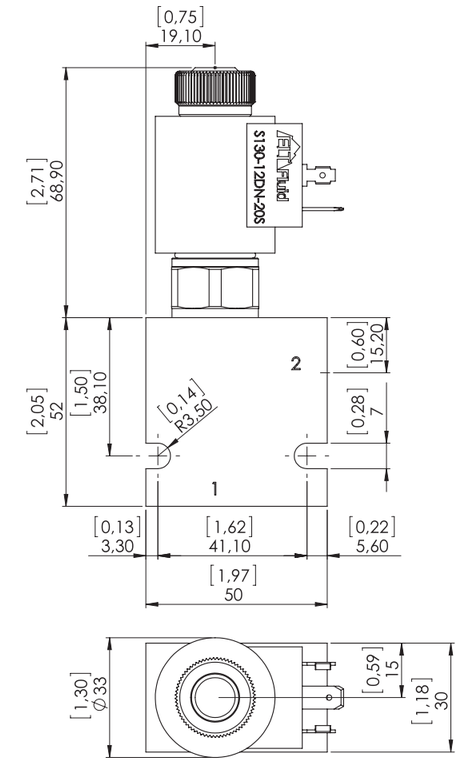

STANDARD HOUSING

Ordering code:	See page 9.02.001
Material:*	Aluminium/Steel Max working pressure for aluminum body: 210 bar Max working pressure for steel body: 350 bar

**Note:* To correctly select the material, in relation to application, see page S.003.

Ordering code

E08N-22 - -

Seals
- None (std. NBR)
- **Y**- Polyurethane
- For other options contact Sales dept.

*Options**
- None (std. without override)
- **S**- Screw out
- **T**- Pull

Connector
- **DN**- Din
- **DU**- Deutsch
- **AM**- Amp Junior

Voltage
- None (std. without coil)
- **12**- Vdc
- **24**- Vdc

Material std. housing
- **A**- Aluminium
- **S**- Steel

Housing size ports
- None (std. only cartridge)
- **2B**- 1/4" BSP
- **3B**- 3/8" BSP
- **2S**- SAE 6
- **3S**- SAE 8

**Note:* Information about manual override is available at page S.001

E08N-23

Solenoid valve 2 ways 2 positions, poppet pilot operated, normally open

Description

Electric cartridge valve on/off designed to hold the load or block flow at high pressure application, where low leakage is requested.

Operation mode

COIL NOT POWERED: the valve allows flow in both directions.
From 2 to 1 and from 1 to 2.
COIL POWERED: the valve in closed position blocks the flow from 2 to 1.

GENERAL DATA

Weight without coil: 0,16 Kg (0,36 lbs).
Ambient temperature range: -30 °C a 60 °C with standard seals (NBR).
Max. proof pressure: 420 bar (6.090 psi).
Flow Max: 40 l/min (10,7 gpm).
Cartridge materials: high strength steel, internal parts hardened and grinding.

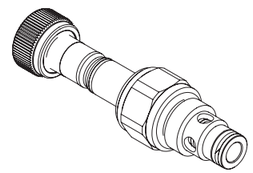

Drawing

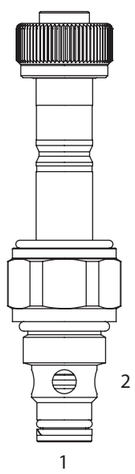

Hydraulic symbol

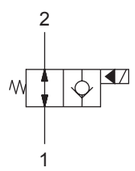

Pressure drop

Oil viscosity: 46 cSt (217 SSU) Fluid temperature: 40 °C

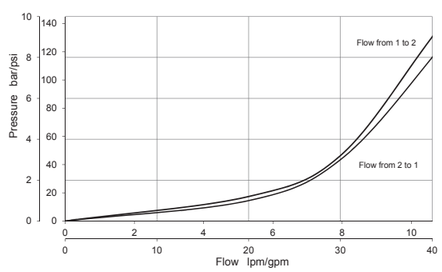

TECHNICAL DATA

HYDRAULIC

Max. working pressure:	350 bar (5.075 psi)
Flow rate:	min 0,5 l/min (0,1 gpm) max 40 l/min (10,7 gpm)
Fluid: *Viscosity:*	Mineral based oil From 15cSt to 250 cSt
Leakage:	0,25 cc/min (5 drops/min) P max. 350 bar (5.075 psi)
Standard seals:	O-ring NBR Back up ring PTFE
Cavity:	SCN0820
Installation torque:	30 Nm
Coil nut torque:	2 Nm
Max contamination level:	NAS 8 ISO 4406 19/17/14
Fluid temperature range:	From -20 °C to +80 °C
Fatigue cycle life:	1.000.000 cycle at 350 bar
Seal kit std.:	5AG0024

ELECTRIC

Type of voltage:	DC
Insulation index:	H
Nominal voltage:	+/- 10 %
Power at 20 °C:	20,5 W
ED:*	100% with ambient temperature range -20 °C +40 °C
Coil code: *(see page 9.01.002)*	S130-20S

**Note:* For temperature or special conditions contact our sales department.

E08N-23

Inches
Millimeters

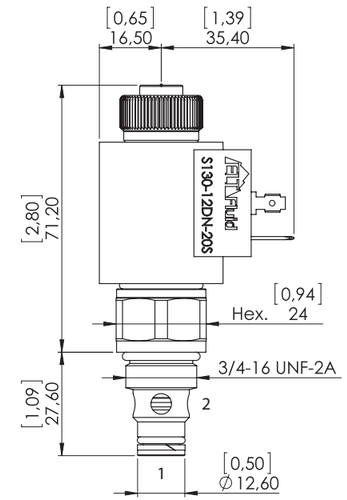

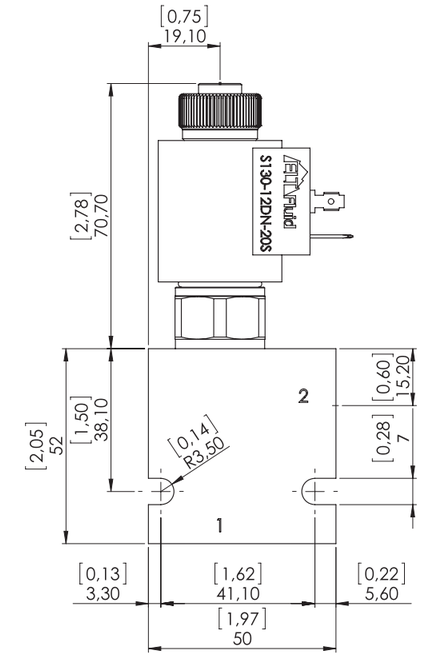

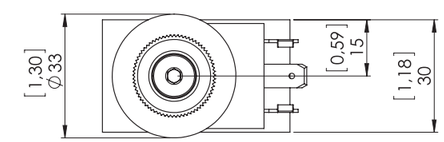

STANDARD HOUSING

Ordering code:	See page 9.02.001
Material:*	Aluminium/Steel Max working pressure for aluminum body: 210 bar Max working pressure for steel body: 350 bar

**Note:* To correctly select the material, in relation to application, see page S.003.

Ordering code

E08N-23 - -

Seals
- None (std. NBR)
- **Y**- Polyurethane
- For other options contact Sales dept.

*Options**
- None (std. without override)
- **P**- Push
- **PT**- Push and twist
- **SV**- Screw in

Connector
- **DN**- Din
- **DU**- Deutsch
- **AM**- Amp Junior

Voltage
- None (std. without coil)
- **12**- Vdc
- **24**- Vdc

Material std. housing
- **A**- Aluminium
- **S**- Steel

Housing size ports
- None (std. only cartridge)
- **2B**- 1/4" BSP
- **3B**- 3/8" BSP
- **2S**- SAE 6
- **3S**- SAE 8

**Note:* Information about manual override is available at page S.001

E08N-24

Solenoid valve 2 ways 2 positions, poppet pilot operated, normally closed

Description

Electric cartridge valve on/off designed to hold the load or block flow at high pressure application, where low leakage is requested.

Operation mode

COIL NOT POWERED: the valve in closed position blocks the flow from 1 to 2.
COIL POWERED: the valve allows flow from 1 to 2.

GENERAL DATA

Weight without coil: 0,16 Kg (0,36 lbs).
Ambient temperature range: -30 °C a 60 °C with standard seals (NBR).
Max. proof pressure: 420 bar (6.090 psi).
Flow Max: 40 l/min (10,7 gpm).
Cartridge materials: high strength steel, internal parts hardened and grinding.

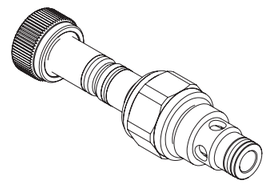

Drawing

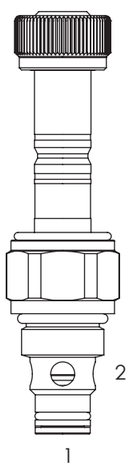

Hydraulic symbol

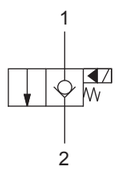

Pressure drop

Oil viscosity: 46 cSt (217 SSU) Fluid temperature: 40 °C

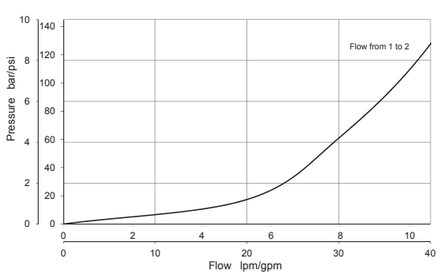

TECHNICAL DATA

HYDRAULIC	
Max. working pressure:	350 bar (5.075 psi)
Flow rate:	min 0,5 l/min (0,1 gpm) max 40 l/min (10,7 gpm)
Fluid: *Viscosity:*	Mineral based oil From 15cSt to 250 cSt
Leakage:	0,25 cc/min (5 drops/min) P max. 350 bar (5.075 psi)
Standard seals:	O-ring NBR Back up ring PTFE
Cavity:	SCN0820
Installation torque:	30 Nm
Coil nut torque:	2 Nm
Max contamination level:	NAS 8 ISO 4406 19/17/14
Fluid temperature range:	From -20 °C to +80 °C
Fatigue cycle life:	1.000.000 cycle at 350 bar
Seal kit std.:	5AG0012
ELECTRIC	
Type of voltage:	DC
Insulation index:	H
Nominal voltage:	+/- 10 %
Power at 20 °C:	20,5 W
ED:*	100% with ambient temperature range -20 °C +40 °C
Coil code: *(see page 9.01.002)*	S130-20S

Note: For temperature or special conditions contact our sales department.

E08N-24

Inches
Millimeters

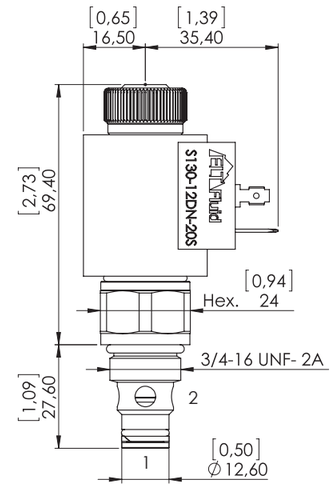

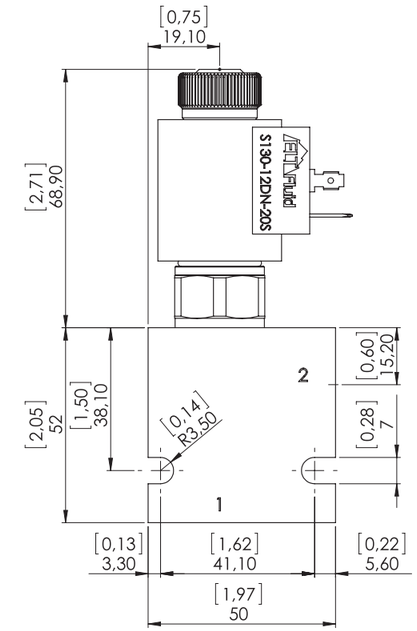

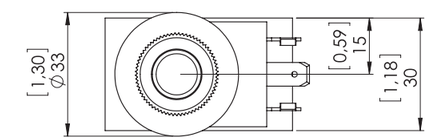

STANDARD HOUSING

Ordering code:	See page 9.02.001
Material:*	Aluminium/Steel Max working pressure for aluminum body: 210 bar Max working pressure for steel body: 350 bar

Note: To correctly select the material, in relation to application, see page S.003.

Ordering code

E08N-24 - -

Seals
- None (std. NBR)
- **Y**- Polyurethane
- For other options contact Sales dept.

Options*
- None (std. without override)
- **S**- Screw out
- **T**- Pull

Connector
- **DN**- Din
- **DU**- Deutsch
- **AM**- Amp Junior

Voltage
- None (std. without coil)
- **12**- Vdc
- **24**- Vdc

Material std. housing
- **A**- Aluminium
- **S**- Steel

Housing size ports
- None (std. only cartridge)
- **2B**- 1/4" BSP
- **3B**- 3/8" BSP
- **2S**- SAE 6
- **3S**- SAE 8

Note: Information about manual override is available at page S.001

E08N-25

Solenoid valve 2 ways 2 positions, poppet pilot operated, normally open

Description

Electric cartridge valve on/off designed to hold the load or block flow at high pressure application, where low leakage is requested.

Operation mode

COIL NOT POWERED: the valve allows flow from 1 to 2.
COIL POWERED: the valve in closed position blocks the flow from 1 to 2.

GENERAL DATA

Weight without coil: 0,16 Kg (0,36 lbs).
Ambient temperature range: -30 °C a 60 °C with standard seals (NBR).
Max. proof pressure: 420 bar (6.090 psi).
Flow Max: 40 l/min (10,7 gpm).
Cartridge materials: high strength steel, internal parts hardened and grinding.

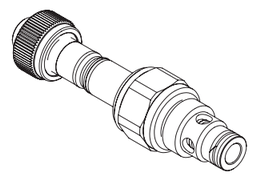

Drawing

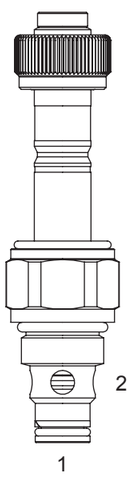

Hydraulic symbol

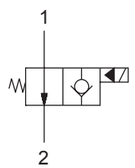

Pressure drop

Oil viscosity: 46 cSt (217 SSU) Fluid temperature: 40 °C

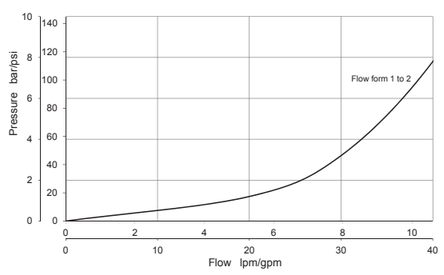

TECHNICAL DATA

HYDRAULIC

Max. working pressure:	350 bar (5.075 psi)
Flow rate:	min 0,5 l/min (0,1 gpm) max 40 l/min (10,7 gpm)
Fluid: *Viscosity:*	Mineral based oil From 15cSt to 250 cSt
Leakage:	0,25 cc/min (5 drops/min) P max. 350 bar (5.075 psi)
Standard seals:	O-ring NBR Back up ring PTFE
Cavity:	SCN0820
Installation torque:	30 Nm
Coil nut torque:	2 Nm
Max contamination level:	NAS 8 ISO 4406 19/17/14
Fluid temperature range:	From -20 °C to +80 °C
Fatigue cycle life:	1.000.000 cycle at 350 bar
Seal kit std.:	5AG0012

ELECTRIC

Type of voltage:	DC
Insulation index:	H
Nominal voltage:	+/- 10 %
Power at 20 °C:	20,5 W
ED:*	100% with ambient temperature range -20 °C +40 °C
Coil code: *(see page 9.01.002)*	S130-20S

**Note:* For temperature or special conditions contact our sales department.

E08N-25

Inches
Millimeters

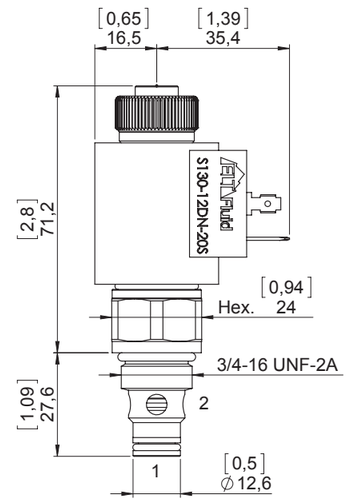

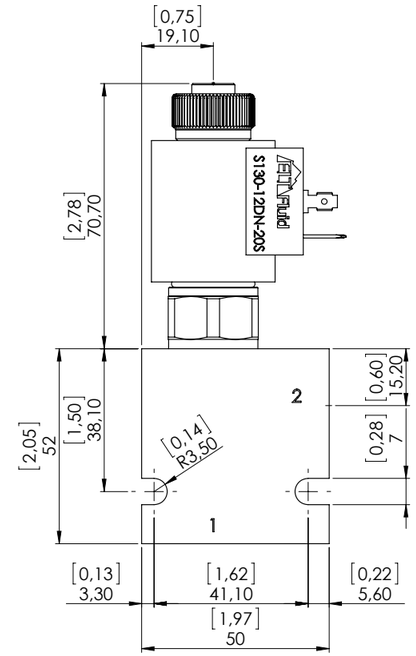

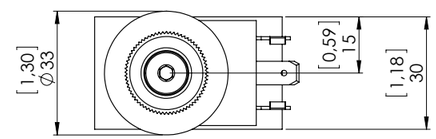

STANDARD HOUSING

Ordering code:	See page 9.02.001
Material:*	Aluminium/Steel Max working pressure for aluminum body: 210 bar Max working pressure for steel body: 350 bar

**Note:* To correctly select the material, in relation to application, see page S.003.

Ordering code

E08N-25 - -

Seals
- None (std. NBR)
- **Y**- Polyurethane
- For other options contact Sales dept.

*Options**
- None (std. without override)
- **P**- Push
- **PT**- Push and twist
- **SV**- Screw in

Connector
- **DN**- Din
- **DU**- Deutsch
- **AM**- Amp Junior

Voltage
- None (std. without coil)
- **12**- Vdc
- **24**- Vdc

Material std. housing
- **A**- Aluminium
- **S**- Steel

Housing size ports
- None (std. only cartridge)
- **2B**- 1/4" BSP
- **3B**- 3/8" BSP
- **2S**- SAE 6
- **3S**- SAE 8

**Note:* Information about manual override is available at page S.001

E08N-26

Solenoid valve 2 ways 2 positions, poppet pilot operated, normally closed

Description

Electric cartridge valve on/off designed to hold the load or block flow at high pressure application, where low leakage is requested.

Operation mode

COIL NOT POWERED: the valve in closed position blocks the flow from 1 to 2.
COIL POWERED: the valve allows flow in both directions.
From 1 to 2 and from 2 to 1.

GENERAL DATA

Weight without coil: 0,16 Kg (0,36 lbs).
Ambient temperature range: -30 °C a 60 °C with standard seals (NBR).
Max. proof pressure: 420 bar (6.090 psi).
Flow Max: 40 l/min (10,7 gpm).
Cartridge materials: high strength steel, internal parts hardened and grinding.

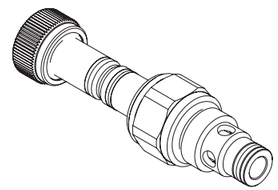

Drawing

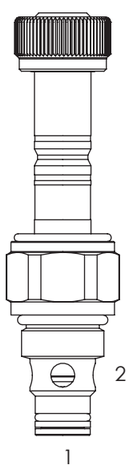

Hydraulic symbol

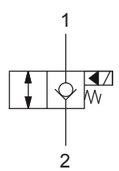

Pressure drop

Oil viscosity: 46 cSt (217 SSU) Fluid temperature: 40 °C

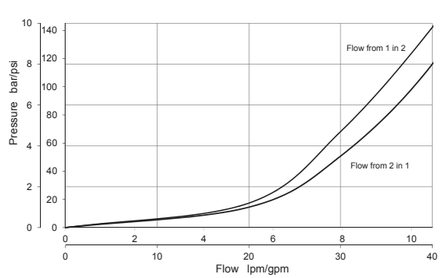

TECHNICAL DATA

HYDRAULIC

Max. working pressure:	350 bar (5.075 psi)
Flow rate:	min 0,5 l/min (0,1 gpm) max 40 l/min (10,6 gpm)
Fluid: *Viscosity:*	Mineral based oil From 15cSt to 250 cSt
Leakage:	0,25 cc/min (5 drops/min) P max. 350 bar (5.000 psi)
Standard seals:	O-ring NBR Back up ring PTFE
Cavity:	SC08200
Installation torque:	30 Nm
Coil nut torque:	2 Nm
Max contamination level:	NAS 8 ISO 4406 19/17/14
Fluid temperature range:	From -20 °C to +80 °C
Fatigue cycle life:	1.000.000 cycle at 350 bar
Seal kit std.:	5AG0012

ELECTRIC

Type of voltage:	DC
Insulation index:	H
Nominal voltage:	+/- 10 %
Power at 20 °CC:	20,5 W
ED:*	100% with ambient temperature range -20 °C +40 °C
Coil code: *(see page 9.01.002)*	S130-20S

**Note:* For temperature or special conditions contact our sales department.

E08N-26

Inches
Millimeters

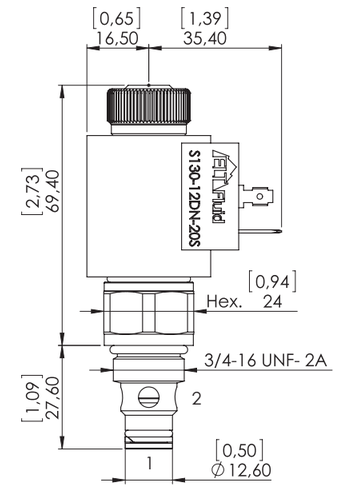

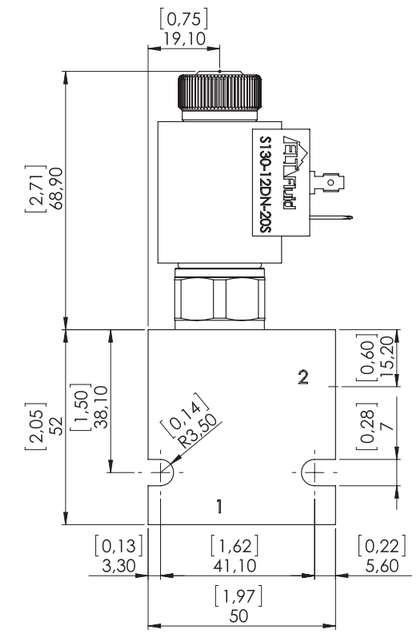

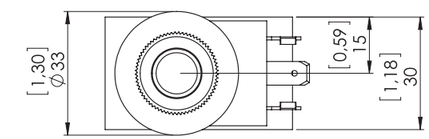

STANDARD HOUSING

Ordering code:	See page 9.02.001
Material:*	Aluminium/Steel Max working pressure for aluminum body: 210 bar Max working pressure for steel body: 350 bar

**Note:* To correctly select the material, in relation to application, see page S.003.

Ordering code

E08N-26 - -

Seals
- None (std. NBR)
- **Y**- Polyurethane
- For other options contact Sales dept.

*Options**
- None (std. without override)
- **S**- Screw out
- **T**- Pull

Connector
- **DN**- Din
- **DU**- Deutsch
- **AM**- Amp Junior

Voltage
- None (std. without coil)
- **12**- Vdc
- **24**- Vdc

Material std. housing
- **A**- Aluminium
- **S**- Steel

Housing size ports
- None (std. only cartridge)
- **2B**- 1/4" BSP
- **3B**- 3/8" BSP
- **2S**- SAE 6
- **3S**- SAE 8

**Note:* Information about manual override is available at page S.001

E08N-27

Solenoid valve 2 ways 2 positions, poppet piloat operated, normally open

Description

Electric cartridge valve on/off designed to hold the load or block flow at high pressure application, where low leakage is requested.

Operation mode

COIL NOT POWERED: the valve allows flow in both directions. From 1 to 2 and from 2 to 1.
COIL POWERED: the valve in closed position blocks the flow from 1 to 2.

GENERAL DATA

Weight without coil: 0,16 Kg (0,36 lbs).
Ambient temperature range: -30 °C a 60 °C with standard seals (NBR).
Max. proof pressure: 420 bar (6.090 psi).
Flow Max: 40 l/min (10,7 gpm).
Cartridge materials: high strength steel, internal parts hardened and grinding.

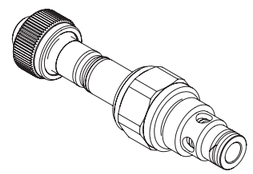

Drawing

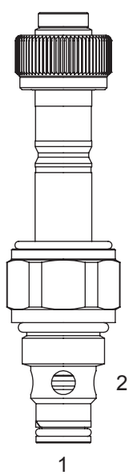

Hydraulic symbol

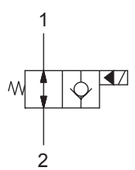

Pressure drop

Oil viscosity: 46 cSt (217 SSU) Fluid temperature: 40 °C

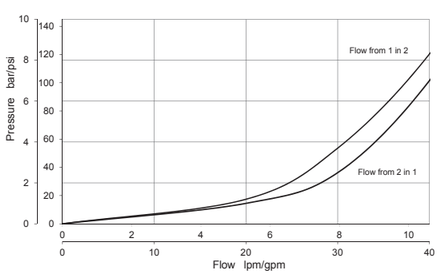

TECHNICAL DATA

HYDRAULIC

Max. working pressure:	350 bar (5.075 psi)
Flow rate:	min 0,5 l/min (0,1 gpm) max 40 l/min (10,7 gpm)
Fluid: *Viscosity:*	Mineral based oil From 15cSt to 250 cSt
Leakage:	0,25 cc/min (5 drops/min) P max. 350 bar (5.075 psi)
Standard seals:	O-ring NBR Back up ring PTFE
Cavity:	SCN0820
Installation torque:	30 Nm
Coil nut torque:	2 Nm
Max contamination level:	NAS 8 ISO 4406 19/17/14
Fluid temperature range:	From -20 °C to +80 °C
Fatigue cycle life:	1.000.000 cycle at 350 bar
Seal kit std.:	5AG0012

ELECTRIC

Type of voltage:	DC
Insulation index:	H
Nominal voltage:	+/- 10 %
Power at 20 °C:	20,5 W
ED:*	100% with ambient temperature range -20 °C +40 °C
Coil code: *(see page 9.01.002)*	S130-20S

**Note:* For temperature or special conditions contact our sales department.

E08N-27

Inches
Millimeters

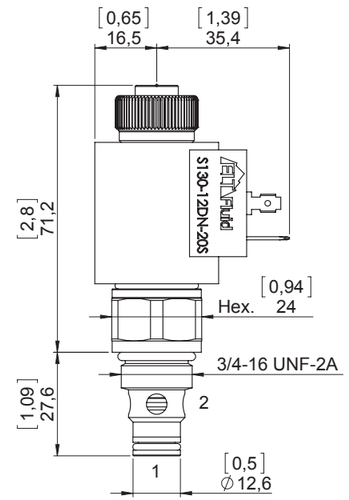

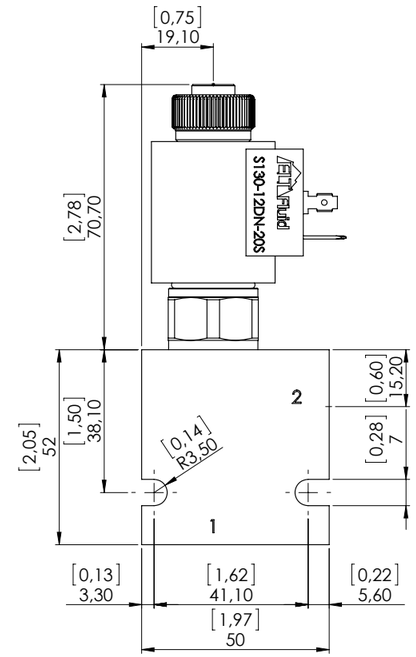

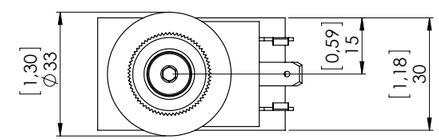

STANDARD HOUSING

Ordering code:	See page 9.02.001
Material:*	Aluminium/Steel Max working pressure for aluminum body: 210 bar Max working pressure for steel body: 350 bar

**Note:* To correctly select the material, in relation to application, see page S.003.

Ordering code

E08N-27 - -

Seals
- None (std. NBR)
- **Y**- Polyurethane
- For other options contact Sales dept.

*Options**
- None (std. without override)
- **P**- Push
- **PT**- Push and twist
- **SV**- Screw in

Connector
- **DN**- Din
- **DU**- Deutsch
- **AM**- Amp Junior

Voltage
- None (std. without coil)
- **12**- Vdc
- **24**- Vdc

Material std. housing
- **A**- Aluminium
- **S**- Steel

Housing size ports
- None (std. only cartridge)
- **2B**- 1/4" BSP
- **3B**- 3/8" BSP
- **2S**- SAE 6
- **3S**- SAE 8

**Note:* Information about manual override is available at page S.001

E08N-28

Solenoid valve 2 ways 2 positions, poppet pilot operated, normally closed

Description

Electric cartridge valve on/off designed to hold the load in both directions in high pressure applications, where low leakage is requested.

Operation mode

COIL NOT POWERED: the valve in closed position blocks flow in both directions. From 2 to 1 and 1 to 2.
COIL POWERED: the valve allows flow in both directions.
From 2 to 1 and from 1 to 2.

GENERAL DATA

Weight without coil: 0,16 Kg (0,36 lbs).
Ambient temperature range: -30 °C a 60 °C with standard seals (NBR).
Max. proof pressure: 420 bar (6.090 psi).
Flow Max: 40 l/min (10,7 gpm).
Cartridge materials: high strength steel, internal parts hardened and grinding.

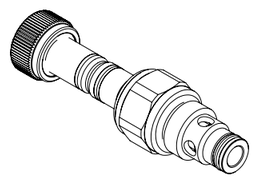

Drawing

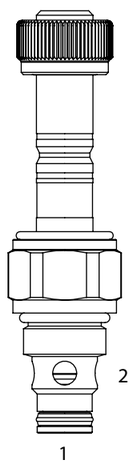

Hydraulic symbol

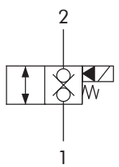

Pressure drop

Oil viscosity: 46 cSt (217 SSU) Fluid temperature: 40 °C

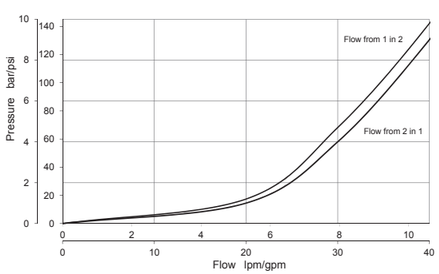

TECHNICAL DATA

HYDRAULIC

Max. working pressure:	350 bar (5.075 psi)
Flow rate:	min 0,5 l/min (0,1 gpm) max 40 l/min (10,7 gpm)
Fluid: *Viscosity:*	Mineral based oil From 15cSt to 250 cSt
Leakage:	0,5 cc/min (10 drops/min) P max. 350 bar (5.075 psi)
Standard seals:	O-ring NBR Seals Polyurethane
Cavity:	SCN0820
Installation torque:	30 Nm
Coil nut torque:	2 Nm
Max contamination level:	NAS 8 ISO 4406 19/17/14
Fluid temperature range:	From -20 °C to +80 °C
Fatigue cycle life:	1.000.000 cycle at 350 bar
Seal kit std.:	5AG0018

ELECTRIC

Type of voltage:	DC
Insulation index:	H
Nominal voltage:	+/- 10 %
Power at 20 °C:	20,5 W
ED:*	100% with ambient temperature range -20 °C +40 °C
Coil code: *(see page 9.01.002)*	S130-20S

**Note:* For temperature or special conditions contact our sales department.

E08N-28

Inches
Millimeters

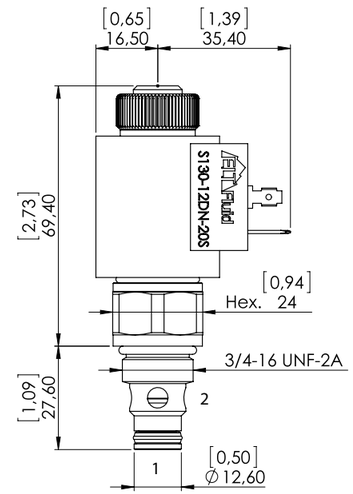

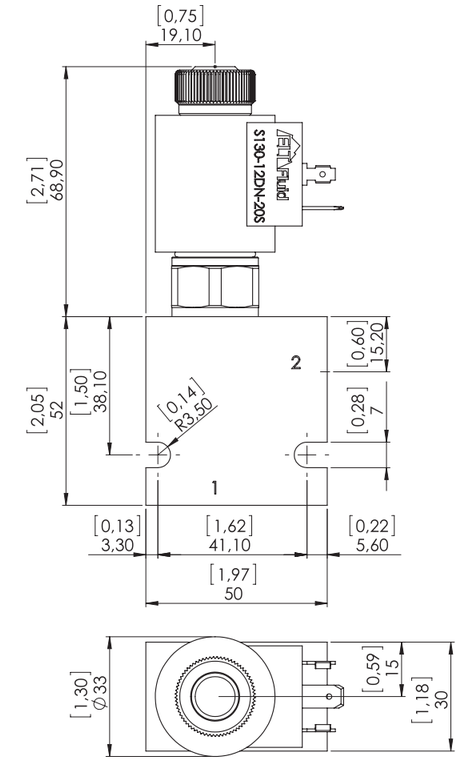

STANDARD HOUSING

Ordering code:	See page 9.02.001
Material:*	Aluminium/Steel Max working pressure for aluminum body: 210 bar Max working pressure for steel body: 350 bar

**Note:* To correctly select the material, in relation to application, see page S.003.

Ordering code

E08N-28 - -

Seals
- None (std. NBR)
- **Y**- Polyurethane
- For other options contact Sales dept.

*Options**
- None (std. without override)
- **S**- Screw out
- **T**- Pull

Connector
- **DN**- Din
- **DU**- Deutsch
- **AM**- Amp Junior

Voltage
- None (std. without coil)
- **12**- Vdc
- **24**- Vdc

Material std. housing
- **A**- Aluminium
- **S**- Steel

Housing size ports
- None (std. only cartridge)
- **2B**- 1/4" BSP
- **3B**- 3/8" BSP
- **2S**- SAE 6
- **3S**- SAE 8

**Note:* Information about manual override is available at page S.001

E08N-29

Solenoid valve 2 ways 2 positions, poppet pilot operated, normally open

Description

Electric cartridge valve on/off designed to hold the load in both directions in high pressure applications, where low leakage is requested.

Operation mode

COIL NOT POWERED: the valve allows flow in both directions. From 1 to 2 and from 2 to 1.
COIL POWERED: the valve in closed position blocks flow in both directions. From 2 to 1 and 1 to 2.

GENERAL DATA

Weight without coil: 0,16 Kg (0,36 lbs).
Ambient temperature range: -30 °C a 60 °C with standard seals (NBR).
Max. proof pressure: 420 bar (6.090 psi).
Flow Max: 40 l/min (10,7 gpm).
Cartridge materials: high strength steel, internal parts hardened and grinding.

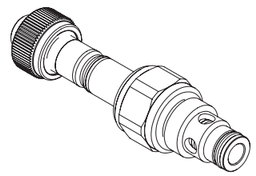

Drawing

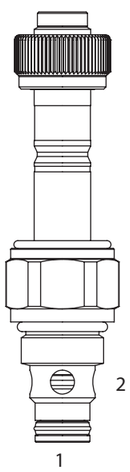

Hydraulic symbol

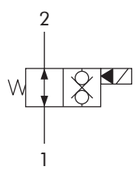

Pressure drop

Oil viscosity: 46 cSt (217 SSU) Fluid temperature: 40 °C

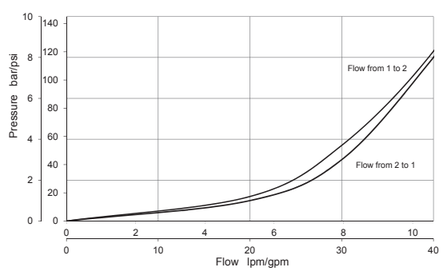

TECHNICAL DATA

HYDRAULIC

Max. working pressure:	350 bar (5.075 psi)
Flow rate:	min 0,5 l/min (0,1 gpm) max 40 l/min (10,7 gpm)
Fluid: *Viscosity:*	Mineral based oil From 15cSt to 250 cSt
Leakage:	0,5 cc/min (10 drops/min) P max. 350 bar (5.075 psi)
Standard seals:	O-ring NBR Seals Polyurethane
Cavity:	SCN0820
Installation torque:	30 Nm
Coil nut torque:	2 Nm
Max contamination level:	NAS 8 ISO 4406 19/17/14
Fluid temperature range:	From -20 °C to +80 °C
Fatigue cycle life:	1.000.000 cycle at 350 bar
Seal kit std.:	5AG0018

ELECTRIC

Type of voltage:	DC
Insulation index:	H
Nominal voltage:	+/- 10 %
Power at 20 °C:	20,5 W
ED:*	100% with ambient temperatur range -20 °C +40 °C
Coil code: *(see page 9.01.002)*	S130-20S

**Note:* For temperature or special conditions contact our sales department.

E08N-29

Inches
Millimeters

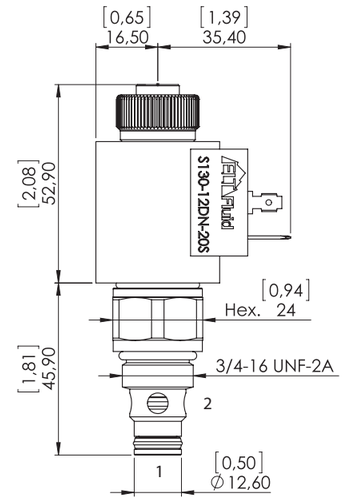

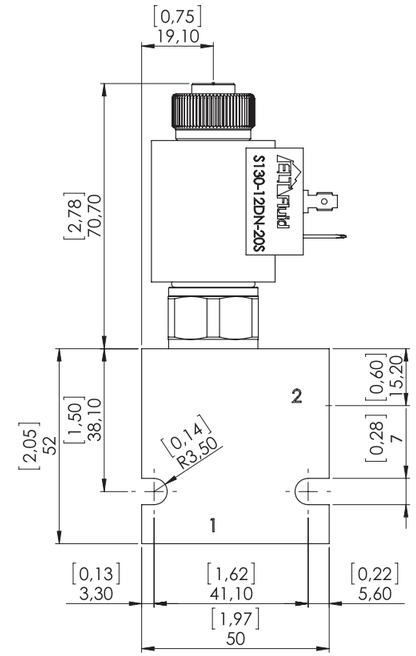

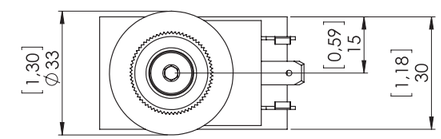

STANDARD HOUSING

Ordering code:	See page 9.02.001
Material:*	Aluminium/Steel Max working pressure for aluminum body: 210 bar Max working pressure for steel body: 350 bar

**Note:* To correctly select the material, in relation to application, see page S.003.

Ordering code

E08N-29 - -

Seals
- None (std. NBR) + Polyurethane
- **Y**- Polyurethane
- For other options contact Sales dept.

*Options**
- None (std. without override)
- **P**- Push
- **PT**- Push and twist
- **SV**- Screw in

Connector
- **DN**- Din
- **DU**- Deutsch
- **AM**- Amp Junior

Voltage
- None (std. without coil)
- **12**- Vdc
- **24**- Vdc

Material std. housing
- **A**- Aluminium
- **S**- Steel

Housing size ports
- None (std. only cartridge)
- **2B**- 1/4" BSP
- **3B**- 3/8" BSP
- **2S**- SAE 6
- **3S**- SAE 8

**Note:* Information about manual override is available at page S.001

E08N-20L

Solenoid valve 2 ways 2 positions, poppet pilot operated, normally closed

Description

Electric cartridge valve on/off designed to hold the load or block flow at high pressure application, where low leakage is requested.

Operation mode

COIL NOT POWERED: the valve in closed position blocks the flow from 2 to 1.
COIL POWERED: the valve allows flow from 2 to 1.

GENERAL DATA

Weight without coil: 0,12 Kg (0,27 lbs).
Ambient temperature range: -30 °C a 60 °C with standard seals (NBR).
Max. proof pressure: 350 bar (5.075 psi).
Flow Max: 30 l/min (8 gpm).
Cartridge materials: high strength steel, internal parts hardened and grinding.

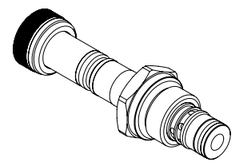

Drawing

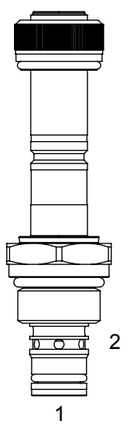

Hydraulic symbol

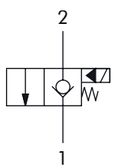

Pressure drop

Oil viscosity: 46 cSt (217 SSU) Fluid temperature: 40 °C

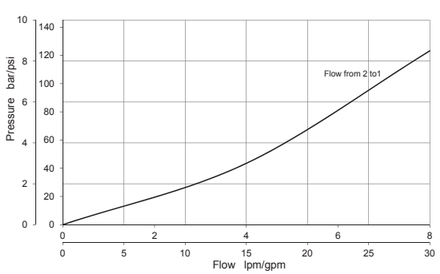

TECHNICAL DATA

HYDRAULIC

Max. working pressure:	300 bar (4.350 psi)
Flow rate:	min 0,5 l/min (0,1 gpm) max 30 l/min (8 gpm)
Fluid: *Viscosity:*	Mineral based oil From 15cSt to 250 cSt
Leakage:	0,25 cc/min (5 drops/min) P max. 350 bar (5.075 psi)
Standard seals:	O-ring NBR Back up ring PTFE
Cavity:	SCN0820
Installation torque:	30 Nm
Coil nut torque:	2 Nm
Max contamination level:	NAS 8 ISO 4406 19/17/14
Fluid temperature range:	From -20 °C to +80 °C
Fatigue cycle life:	1.000.000 cycle at 300 bar
Seal kit std.:	5AG0024

ELECTRIC

Type of voltage:	DC
Insulation index:	F
Nominal voltage:	+/- 10 %
Power at 20 °C:	18 W
ED:*	100% with ambient temperature range -20 °C +40 °C
Coil code: *(see page 9.01.002)*	S130-18P

**Note:* For temperature or special conditions contact our sales department.

E08N-20L

Inches
Millimeters

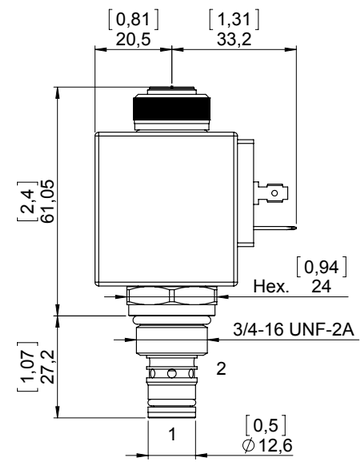

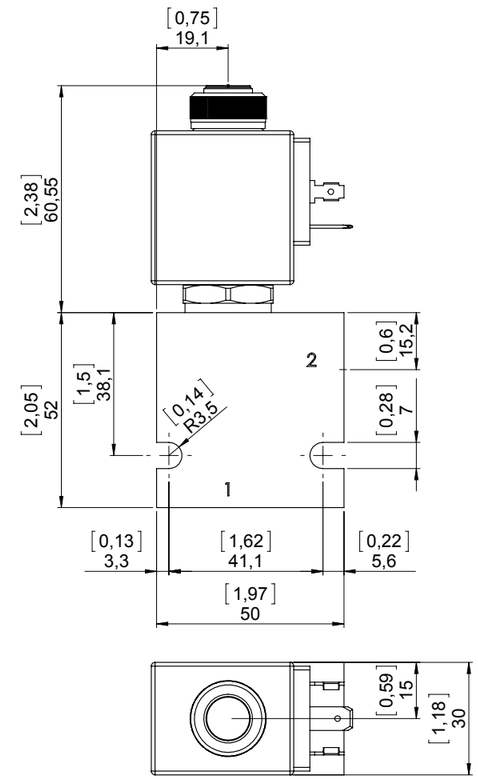

STANDARD HOUSING

Ordering code:	See page 9.02.001
Material:*	Aluminium/Steel Max working pressure for aluminum body: 210 bar Max working pressure for steel body: 350 bar

**Note:* To correctly select the material, in relation to application, see page S.003.

Ordering code

E08N-20L - - -

Seals
- None (std. NBR)
- **Y**- Polyurethane
- For other options contact Sales dept.

Options*
- None (std. without override)
- **S**- Screw out
- **T**- Pull

Voltage
- None (std. without coil)
- **12**- Vdc
- **24**- Vdc

Screen Filter
- None (std. without filter)
- **F**- Filter

Material std. housing
- **A**- Aluminium
- **S**- Steel

Housing size ports
- None (std. only cartridge)
- **2B**- 1/4" BSP
- **3B**- 3/8" BSP
- **2S**- SAE 6
- **3S**- SAE 8

Connector
- **DN**- Din
- **DU**- Deutsch
- **AM**- Amp Junior

**Note:* Information about manual override is available at page S.001

E08N-21L

Solenoid valve 2 ways 2 positions, poppet pilot operated, normally open

Description

Electric cartridge valve on/off designed to hold the load or block flow at high pressure application, where low leakage is requested.

Operation mode

COIL NOT POWERED: the valve allows flow from 2 to 1.
COIL POWERED: the valve in closed position blocks the flow from 2 to 1.

GENERAL DATA

Weight without coil: 0,12 Kg (0,27 lbs).
Ambient temperature range: -30 °C a 60 °C with standard seals (NBR).
Max. proof pressure: 350 bar (5.075 psi).
Flow Max: 30 l/min (8 gpm).
Cartridge materials: high strength steel, internal parts hardened and grinding.

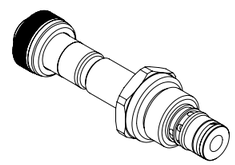

Drawing

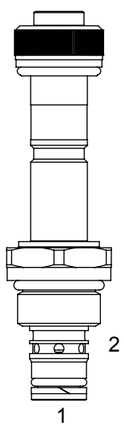

Hydraulic symbol

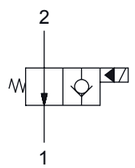

TECHNICAL DATA

HYDRAULIC	
Max. working pressure:	300 bar (4.350 psi)
Flow rate:	min 0,5 l/min (0,1 gpm) max 30 l/min (8 gpm)
Fluid: *Viscosity:*	Mineral based oil From 15cSt to 250 cSt
Leakage:	0,25 cc/min (5 drops/min) P max. 350 bar (5.075 psi)
Standard seals:	O-ring NBR Back up ring PTFE
Cavity:	SCN0820
Installation torque:	30 Nm
Coil nut torque:	2 Nm
Max contamination level:	NAS 8 ISO 4406 19/17/14
Fluid temperature range:	From -20 °C to +80 °C
Fatigue cycle life:	1.000.000 cycle at 300 bar
Seal kit std.:	5AG0024
ELECTRIC	
Type of voltage:	DC
Insulation index:	F
Nominal voltage:	+/- 10 %
Power at 20 °C:	18 W
ED:*	100% with ambient temperature range -20 °C +40 °C
Coil code: *(see page 9.01.002)*	S130-18P

**Note:* For temperature or special conditions contact our sales department.

Pressure drop

Oil viscosity: 46 cSt (217 SSU) Fluid temperature: 40 °C

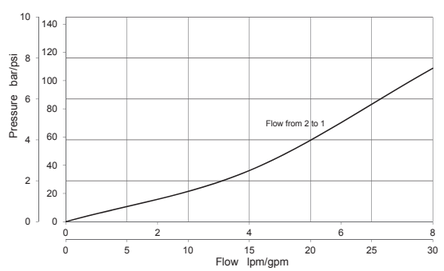

E08N-21L

Inches
Millimeters

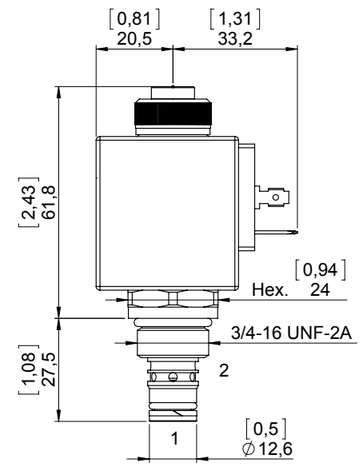

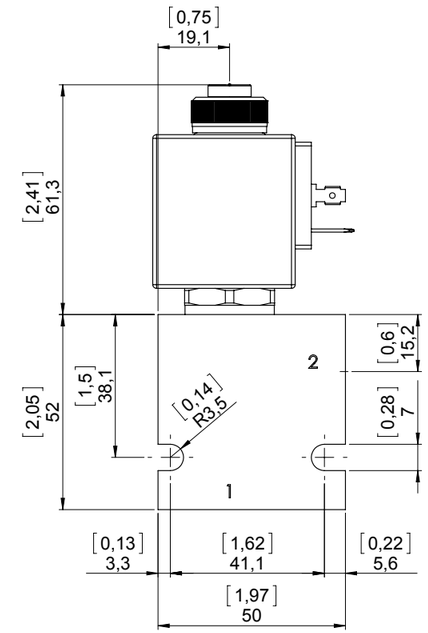

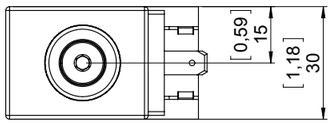

STANDARD HOUSING

Ordering code:	See page 9.02.001
Material:*	Aluminium/Steel Max working pressure for aluminum body: 210 bar Max working pressure for steel body: 350 bar

**Note:* To correctly select the material, in relation to application, see page S.003.

Ordering code

E08N-21L - - -

Seals
- None (std. NBR)
- **Y**- Polyurethane
- For other options contact Sales dept.

Options*
- None (std. without override)
- **P**- Push
- **PT**- Push and twist
- **SV**- Screw in
- **EC**- Push pin

**Note:* Information about manual override is available at page S.001

Voltage
- None (std. without coil)
- **12**- Vdc
- **24**- Vdc

Screen Filter
- None (std. without filter)
- **F**- Filter

Material std. housing
- **A**- Aluminium
- **S**- Steel

Housing size ports
- None (std. only cartridge)
- **2B**- 1/4" BSP
- **3B**- 3/8" BSP
- **2S**- SAE 6
- **3S**- SAE 8

Connector
- **DN**- Din
- **DU**- Deutsch
- **AM**- Amp Junior

E08N-22L

Solenoid valve 2 ways 2 positions, poppet pilot operated, normally closed

Description

Electric cartridge valve on/off designed to hold the load or block flow at high pressure application, where low leakage is requested.

Operation mode

COIL NOT POWERED: the valve in closed position blocks the flow from 2 to 1.
COIL POWERED: the valve allows flow in both directions.
From 2 to 1 and from 1 to 2.

GENERAL DATA

Weight without coil: 0,12 Kg (0,27 lbs).
Ambient temperature range: -30 °C a 60 °C with standard seals (NBR).
Max. proof pressure: 350 bar (5.075 psi).
Flow Max: 30 l/min (8 gpm).
Cartridge materials: high strength steel, internal parts hardened and grinding.

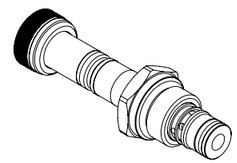

Drawing

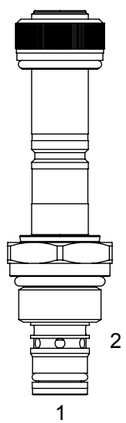

Hydraulic symbol

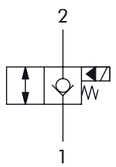

Pressure drop

Oil viscosity: 46 cSt (217 SSU) Fluid temperature: 40 °C

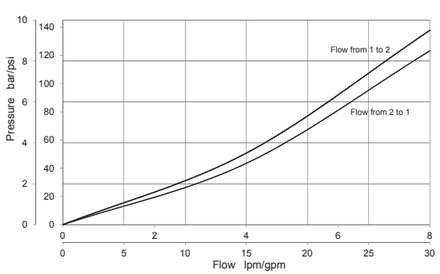

TECHNICAL DATA

HYDRAULIC

Max. working pressure:	300 bar (4.350 psi)
Flow rate:	min 0,5 l/min (0,1 gpm) max 30 l/min (8 gpm)
Fluid: *Viscosity:*	Mineral based oil From 15cSt to 250 cSt
Leakage:	0,25 cc/min (5 drops/min) P max. 350 bar (5.075 psi)
Standard seals:	O-ring NBR Back up ring PTFE
Cavity:	SCN0820
Installation torque:	30 Nm
Coil nut torque:	2 Nm
Max contamination level:	NAS 8 ISO 4406 19/17/14
Fluid temperature range:	From -20 °C to +80 °C
Fatigue cycle life:	1.000.000 di cicli a 300 bar
Seal kit std.:	5AG0024

ELECTRIC

Type of voltage:	DC
Insulation index:	F
Nominal voltage:	+/- 10 %
Power at 20 °C:	18 W
ED:*	100% with ambient temperature range -20 °C +40 °C
Coil code: *(see page 9.01.002)*	S130-18P

**Note:* For temperature or special conditions contact our sales department.

E08N-22L

Inches
Millimeters

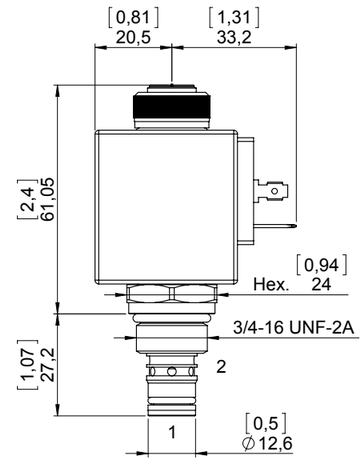

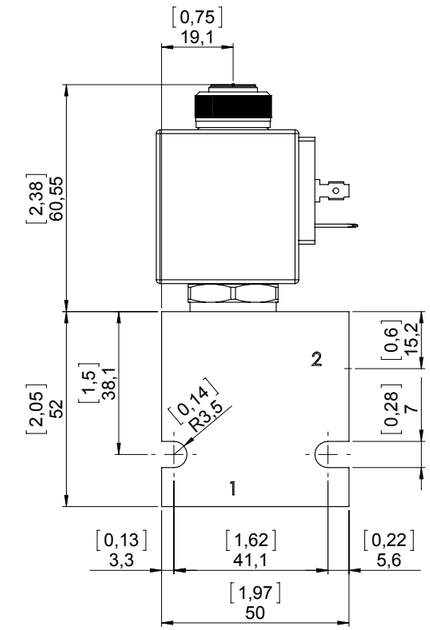

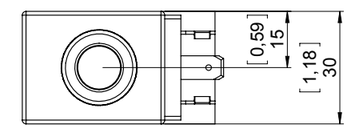

STANDARD HOUSING

Ordering code:	See page 9.02.001
Material:*	Aluminium/Steel Max working pressure for aluminum body: 210 bar Max working pressure for steel body: 350 bar

**Note:* To correctly select the material, in relation to application, see page S.003.

Ordering code

E08N-22L - - -

Seals
- None (std. NBR)
- **Y**- Polyurethane
- For other options contact Sales dept.

*Options**
- None (std. without override)
- **S**- Screw out
- **T**- Pull

Voltage
- None (std. without coil)
- **12**- Vdc
- **24**- Vdc

Screen Filter
- None (std. without filter)
- **F**- Filter

Material std. housing
- **A**- Aluminium
- **S**- Steel

Housing size ports
- None (std. only cartridge)
- **2B**- 1/4" BSP
- **3B**- 3/8" BSP
- **2S**- SAE 6
- **3S**- SAE 8

Connector
- **DN**- Din
- **DU**- Deutsch
- **AM**- Amp Junior

**Note:* Information about manual override is available at page S.001

E08N-23L

Solenoid valve 2 ways 2 positions, poppet pilot operated, normally closed

Description

Electric cartridge valve on/off designed to hold the load or block flow at high pressure application, where low leakage is requested.

Operation mode

COIL NOT POWERED: the valve allows flow in both directions. From 2 to 1 and from 1 to 2.
COIL POWERED: the valve in closed position blocks the flow from 2 to 1.

GENERAL DATA

Weight without coil: 0,12 Kg (0,27 lbs).
Ambient temperature range: -30 °C a 60 °C with standard seals (NBR).
Max. proof pressure: 350 bar (5.075 psi).
Flow Max: 30 l/min (8 gpm).
Cartridge materials: high strength steel, internal parts hardened and grinding.

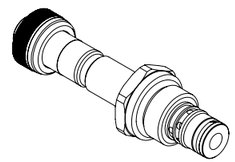

Drawing

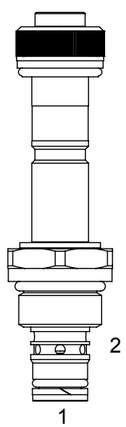

Hydraulic symbol

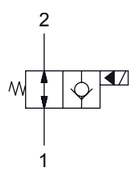

Pressure drop

Oil viscosity: 46 cSt (217 SSU) Fluid temperature: 40 °C

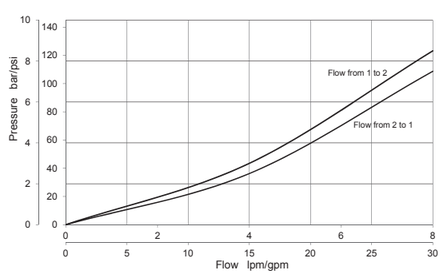

TECHNICAL DATA

HYDRAULIC

Max. working pressure:	300 bar (4.350 psi)
Flow rate:	min 0,5 l/min (0,1 gpm) max 30 l/min (8 gpm)
Fluid: *Viscosity:*	Mineral based oil From 15cSt to 250 cSt
Leakage:	0,25 cc/min (5 drops/min) P max. 350 bar (5.075 psi)
Standard seals:	O-ring NBR Back up ring PTFE
Cavity:	SCN0820
Installation torque:	30 Nm
Coil nut torque:	2 Nm
Max contamination level:	NAS 8 ISO 4406 19/17/14
Fluid temperature range:	From -20 °C to +80 °C
Fatigue cycle life:	1.000.000 cycle at 300 bar
Seal kit std.:	5AG0024

ELECTRIC

Type of voltage:	DC
Insulation index:	F
Nominal voltage:	+/- 10 %
Power at 20 °C:	18 W
ED:*	100% with ambient temperature range -20 °C +40 °C
Coil code: *(see page 9.01.002)*	S130-18P

**Note:* For temperature or special conditions contact our sales department.

E08N-23L

Inches
Millimeters

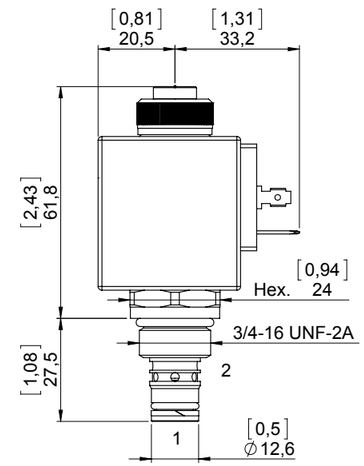

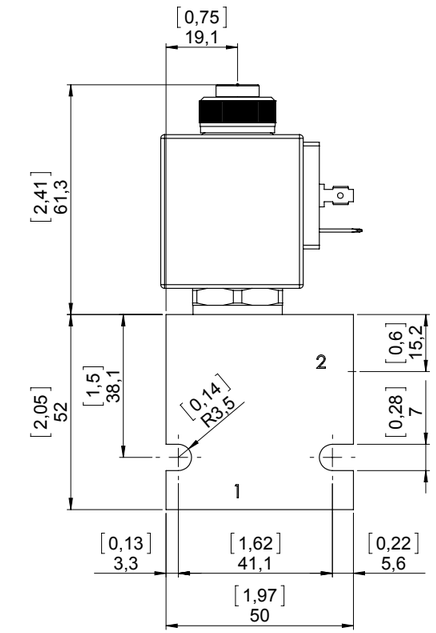

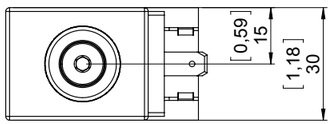

STANDARD HOUSING

Ordering code:	See page 9.02.001
Material:*	Aluminium/Steel Max working pressure for aluminum body: 210 bar Max working pressure for steel body: 350 bar

**Note:* To correctly select the material, in relation to application, see page S.003.

Ordering code

E08N-23L - - -

Seals
- None (std. NBR)
- **Y**- Polyurethane
- For other options contact Sales dept.

*Options**
- None (std. without override)
- **P**- Push
- **PT**- Push and twist
- **SV**- Screw in
- **EC**- Push pin

**Note:* Information about manual override is available at page S.001

Voltage
- None (std. without coil)
- **12**- Vdc
- **24**- Vdc

Screen Filter
- None (std. without filter)
- **F**- Filter

Material std. housing
- **A**- Aluminium
- **S**- Steel

Housing size ports
- None (std. only cartridge)
- **2B**- 1/4" BSP
- **3B**- 3/8" BSP
- **2S**- SAE 6
- **3S**- SAE 8

Connector
- **DN**- Din
- **DU**- Deutsch
- **AM**- Amp Junior

E10N-20

Solenoid valve 2 ways 2 positions, poppet pilot operated, normally closed

Description

Electric cartridge valve on/off designed to hold the load or block flow at high pressure application, where low leakage is requested.

Operation mode

COIL NOT POWERED: the valve in closed position blocks the flow from 2 to 1.
COIL POWERED: the valve allows flow from 2 to 1.

GENERAL DATA

Weight without coil: 0,19 Kg (0,42 lbs).
Ambient temperature range: -30 °C a 60 °C with standard seals (NBR).
Max. proof pressure: 420 bar (6.090 psi).
Flow Max: 70 l/min (18,7 gpm).
Cartridge materials: high strength steel, internal parts hardened and grinding.

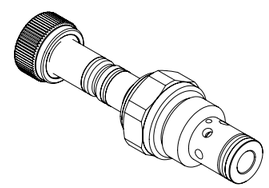

Drawing

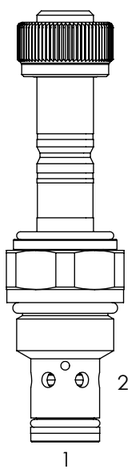

Hydraulic symbol

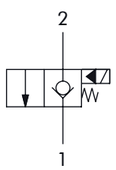

Pressure drop

Oil viscosity: 46 cSt (217 SSU) Fluid temperature: 40 °C

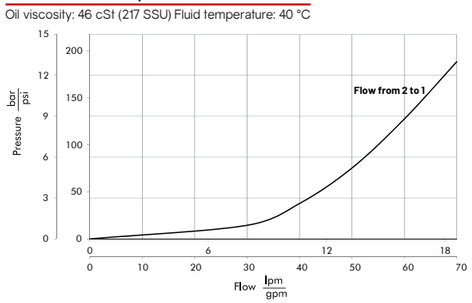

TECHNICAL DATA

HYDRAULIC

Max. working pressure:	350 bar (5.075 psi)
Flow rate:	min 2 l/min (0,5 gpm) max 70 l/min (18,7 gpm)
Fluid: *Viscosity:*	Mineral based oil From 15cSt to 250 cSt
Leakage:	0,25 cc/min (5 drops/min) P max. 350 bar (5.075 psi)
Standard seals:	O-ring NBR Back up ring PTFE
Cavity:	SCN1020
Installation torque:	40 Nm
Coil nut torque:	2 Nm
Max contamination level:	NAS 8 ISO 4406 19/17/14
Fluid temperature range:	From -20 °C to +80 °C
Fatigue cycle life:	1.000.000 cycle at 350 bar
Seal kit std.:	5AG0025

ELECTRIC

Type of voltage:	DC
Insulation index:	H
Nominal voltage:	+/- 10 %
Power at 20 °C:	20,5 W
ED:*	100% with ambient temperature range -20 °C +40 °C
Coil code: *(see page 9.01.002)*	S130-20S

**Note:* For temperature or special conditions contact our sales department.

E10N-20

Inches
Millimeters

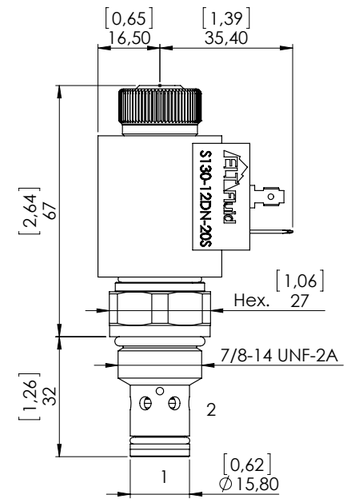

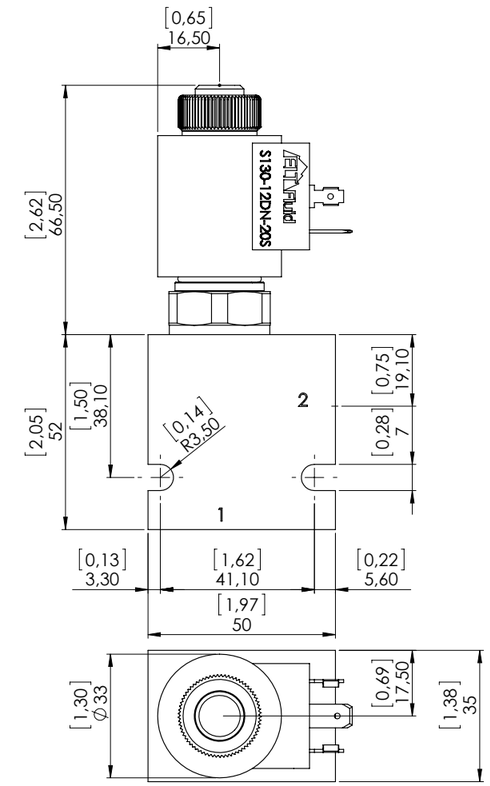

STANDARD HOUSING

Ordering code:	See page 9.03.001
Material:*	Aluminium/Steel Max working pressure for aluminum body: 210 bar Max working pressure for steel body: 350 bar

**Note:* To correctly select the material, in relation to application, see page S.003.

Ordering code

E10N-20 - -

Seals
- None (std. NBR)
- **Y**- Polyurethane
- For other options contact Sales dept.

*Options**
- None (std. without override)
- **S**- Screw out
- **T**- Pull

Connector
- **DN**- Din
- **DU**- Deutsch
- **AM**- Amp Junior

Voltage
- None (std. without coil)
- **12**- Vdc
- **24**- Vdc

Material std. housing
- **A**- Aluminium
- **S**- Steel

Housing size ports
- None (std. only cartridge)
- **3B**- 3/8" BSP
- **4B**- 1/2" BSP
- **3S**- SAE 8
- **4S**- SAE 10

**Note:* Information about manual override is available at page S.001

E10N-21

Solenoid valve 2 ways 2 positions, poppet pilot operated, normally open

Description

Electric cartridge valve on/off designed to hold the load or block flow at high pressure application, where low leakage is requested.

Operation mode

COIL NOT POWERED: the valve allows flow from 2 to 1.
COIL POWERED: the valve in closed position blocks the flow from 2 to 1.

GENERAL DATA

Weight without coil: 0,19 Kg (0,42 lbs).
Ambient temperature range: -30 °C a 60 °C with standard seals (NBR).
Max. proof pressure: 420 bar (6.090 psi).
Flow Max: 70 l/min (18,7 gpm).
Cartridge materials: high strength steel, internal parts hardened and grinding.

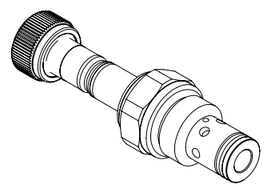

Drawing

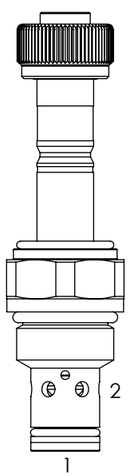

Hydraulic symbol

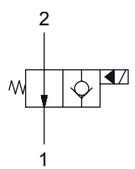

Pressure drop

Oil viscosity: 46 cSt (217 SSU) Fluid temperature: 40 °C

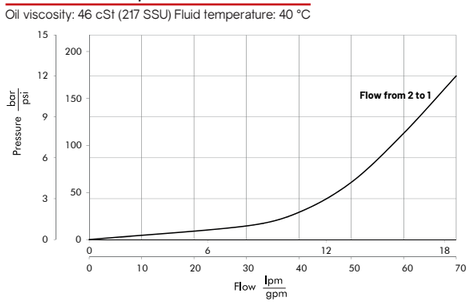

TECHNICAL DATA

HYDRAULIC

Max. working pressure:	350 bar (5.075 psi)
Flow rate:	min 2 l/min (0,5 gpm) max 70 l/min (18,7 gpm)
Fluid: *Viscosity:*	Mineral based oil From 15cSt to 250 cSt
Leakage:	0,25 cc/min (5 drops/min) P max. 350 bar (5.075 psi)
Standard seals:	O-ring NBR Back up ring PTFE
Cavity:	SCN1020
Installation torque:	40 Nm
Coil nut torque:	2 Nm
Max contamination level:	NAS 8 ISO 4406 19/17/14
Fluid temperature range:	From -20 °C to +80 °C
Fatigue cycle life:	1.000.000 cycle at 350 bar
Seal kit std.:	5AG0025

ELECTRIC

Type of voltage:	DC
Insulation index:	H
Nominal voltage:	+/- 10 %
Power at 20 °C:	20,5 W
ED:*	100% with ambient temperature range -20 °C +40 °C
Coil code: *(see page 9.01.002)*	S130-20S

**Note:* For temperature or special conditions contact our sales department.

E10N-21

Inches
Millimeters

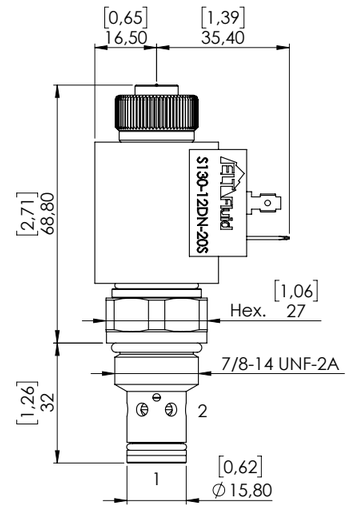

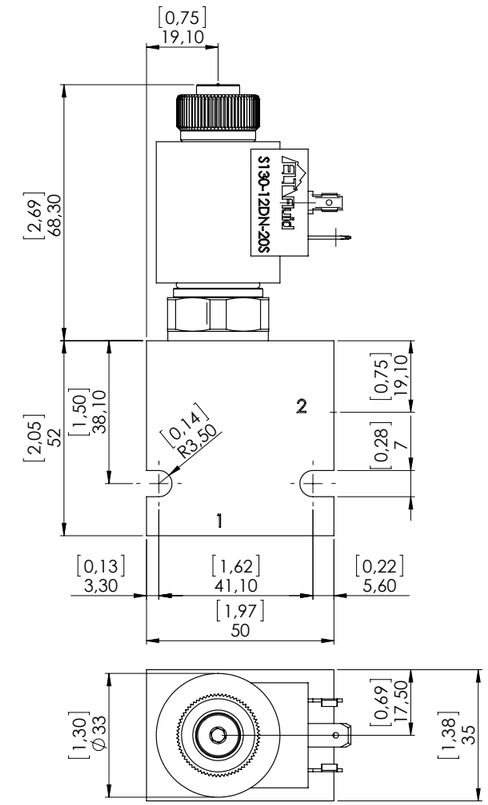

STANDARD HOUSING

Ordering code:	See page 9.03.001
Material:*	Aluminium/Steel Max working pressure for aluminum body: 210 bar Max working pressure for steel body: 350 bar

**Note:* To correctly select the material, in relation to application, see page S.003.

Ordering code

E10N-21 - -

Seals
- None (std. NBR)
- **Y**- Polyurethane
- For other options contact Sales dept.

*Options**
- None (std. without override)
- **P**- Push
- **PT**- Push and twist
- **SV**- Screw in

Connector
- **DN**- Din
- **DU**- Deutsch
- **AM**- Amp Junior

Voltage
- None (std. without coil)
- **12**- Vdc
- **24**- Vdc

Material std. housing
- **A**- Aluminium
- **S**- Steel

Housing size ports
- None (std. only cartridge)
- **3B**- 3/8" BSP
- **4B**- 1/2" BSP
- **3S**- SAE 8
- **4S**- SAE 10

**Note:* Information about manual override is available at page S.001

E10N-22

Solenoid valve 2 ways 2 positions, poppet pilot operated, normally closed

Description

Electric cartridge valve on/off designed to hold the load or block flow at high pressure application where low leakage is requested.

Operation mode

COIL NOT POWERED: the valve in closed position blocks the flow from 2 to 1.
COIL POWERED: the valve allows flow in both directions.
From 2 to 1 and from 1 to 2.

GENERAL DATA

Weight without coil: 0,19 Kg (0,42 lbs).
Ambient temperature range: -30 °C a 60 °C with standard seals (NBR).
Max. proof pressure: 420 bar (6.090 psi).
Flow Max: 70 l/min (18,7 gpm).
Cartridge materials: high strength steel, internal parts hardened and grinding.

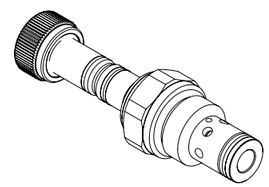

Drawing

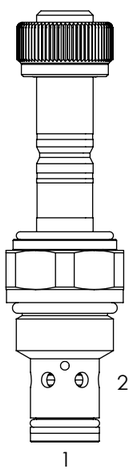

Hydraulic symbol

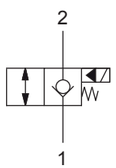

Pressure drop

Oil viscosity: 46 cSt (217 SSU) Fluid temperature: 40 °C

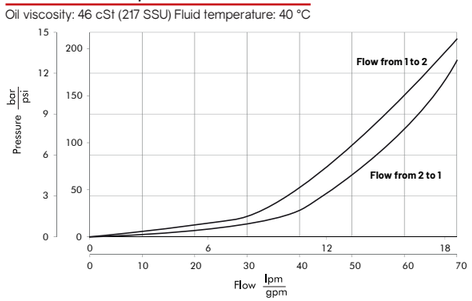

TECHNICAL DATA

HYDRAULIC

Max. working pressure:	350 bar (5.075 psi)
Flow rate:	min 2 l/min (0,5 gpm) max 70 l/min (18,7 gpm)
Fluid: *Viscosity:*	Mineral based oil From 15cSt to 250 cSt
Leakage:	0,25 cc/min (5 drops/min) P max. 350 bar (5.075 psi)
Standard seals:	O-ring NBR Back up ring PTFE
Cavity:	SCN1020
Installation torque:	40 Nm
Coil nut torque:	2 Nm
Max contamination level:	NAS 8 ISO 4406 19/17/14
Fluid temperature range:	From -20 °C to +80 °C
Fatigue cycle life:	1.000.000 cycle at 350 bar
Seal kit std.:	5AG0025

ELECTRIC

Type of voltage:	DC
Insulation index:	H
Nominal voltage:	+/- 10 %
Power at 20 °C:	20,5 W
ED:*	100% with ambient temperature range -20 °C +40 °C
Coil code: *(see page 9.01.002)*	S130-20S

**Note:* For temperature or special conditions contact our sales department.

E10N-22

Inches
Millimeters

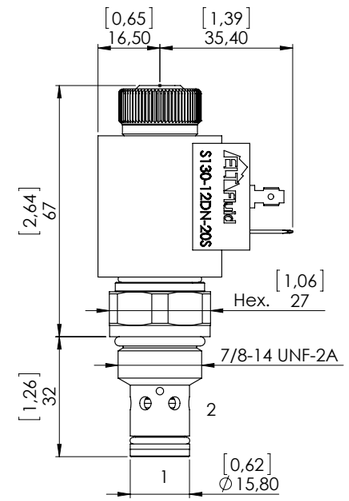

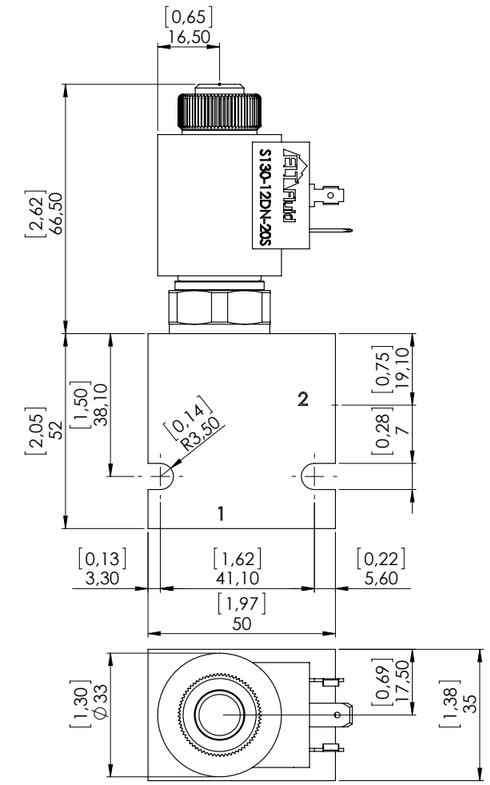

STANDARD HOUSING

Ordering code:	See page 9.03.001
Material:*	Aluminium/Steel Max working pressure for aluminum body: 210 bar Max working pressure for steel body: 350 bar

**Note:* To correctly select the material, in relation to application, see page S.003.

Ordering code

E10N-22 - -

Seals
- None (std. NBR)
- **Y**- Polyurethane
- For other options contact Sales dept.

*Options**
- None (std. without override)
- **S**- Screw out
- **T**- Pull

Connector
- **DN**- Din
- **DU**- Deutsch
- **AM**- Amp Junior

Voltage
- None (std. without coil)
- **12**- Vdc
- **24**- Vdc

Material std. housing
- **A**- Aluminium
- **S**- Steel

Housing size ports
- None (std. only cartridge)
- **3B**- 3/8" BSP
- **4B**- 1/2" BSP
- **3S**- SAE 8
- **4S**- SAE 10

**Note:* Information about manual override is available at page S.001

E10N-23

Solenoid valve 2 ways 2 positions, poppet pilot operated, normally open

Description

Electric cartridge valve on/off designed to hold the load or block flow at high pressure application, where low leakage is requested.

Operation mode

COIL NOT POWERED: the valve allows flow in both directions.
From 2 to 1 and from 1 to 2.
COIL POWERED: the valve in closed position blocks the flow from 2 to 1.

GENERAL DATA

Weight without coil: 0,19 Kg (0,42 lbs).
Ambient temperature range: -30 °C a 60 °C with standard seals (NBR).
Max. proof pressure: 420 bar (6.090 psi).
Flow Max: 70 l/min (18,7 gpm).
Cartridge materials: high strength steel, internal parts hardened and grinding.

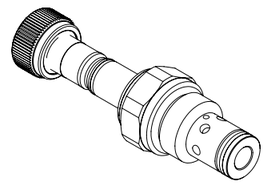

Drawing

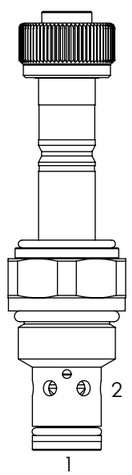

Hydraulic symbol

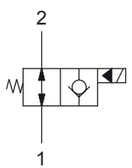

Pressure drop

Oil viscosity: 46 cSt (217 SSU) Fluid temperature: 40 °C

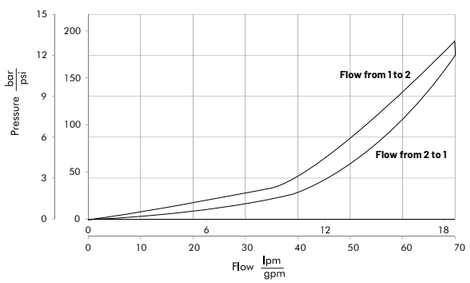

TECHNICAL DATA

HYDRAULIC

Max. working pressure:	350 bar (5.075 psi)
Flow rate:	min 2 l/min (0,5 gpm) max 70 l/min (18,7 gpm)
Fluid: *Viscosity:*	Mineral based oil From 15cSt to 250 cSt
Leakage:	0,25 cc/min (5 drops/min) P max. 350 bar (5.075 psi)
Standard seals:	O-ring NBR Back up ring PTFE
Cavity:	SCN1020
Installation torque:	40 Nm
Coil nut torque:	2 Nm
Max contamination level:	NAS 8 ISO 4406 19/17/14
Fluid temperature range:	From -20 °C to +80 C°
Fatigue cycle life:	1.000.000 cycle at 350 bar
Seal kit std.:	5AG0025

ELECTRIC

Type of voltage:	DC
Insulation index:	H
Nominal voltage:	+/- 10 %
Power at 20 °C:	20,5 W
ED:*	100% with ambient temperature range -20 °C +40 °C
Coil code: *(see page 9.01.002)*	S130-20S

**Note:* For temperature or special conditions contact our sales department.

E10N-23

Inches
Millimeters

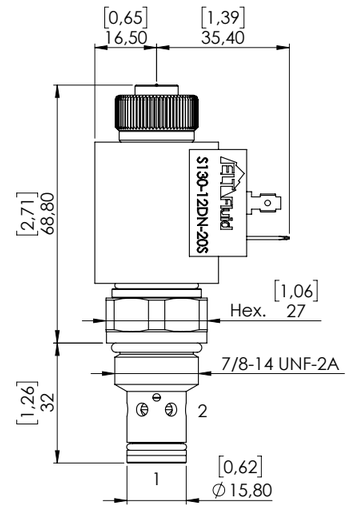

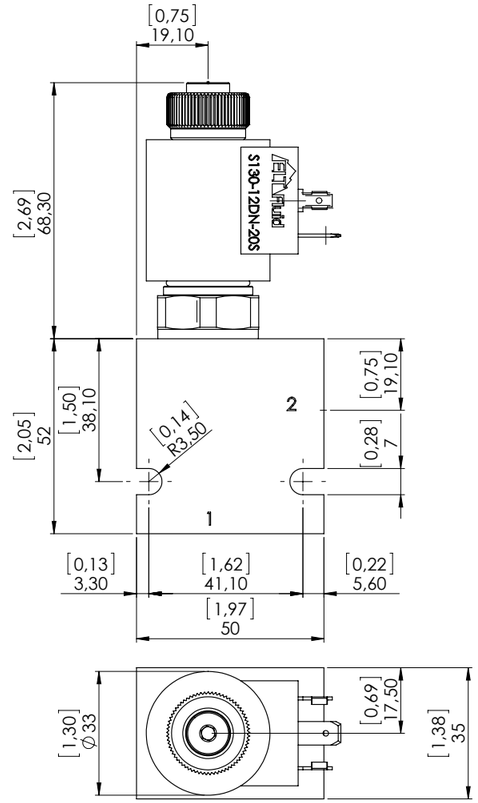

STANDARD HOUSING

Ordering code:	See page 9.03.001
Material:*	Aluminium/Steel Max working pressure for aluminum body: 210 bar Max working pressure for steel body: 350 bar

**Note:* To correctly select the material, in relation to application, see page S.003.

Ordering code

E10N-23 - - -

Seals
- None (std. NBR)
- **Y**- Polyurethane
- For other options contact Sales dept.

*Options**
- None (std. without override)
- **P**- Push
- **PT**- Push and twist
- **SV**- Screw in

Connector
- **DN**- Din
- **DU**- Deutsch
- **AM**- Amp Junior

Voltage
- None (std. without coil)
- **12**- Vdc
- **24**- Vdc

Material std. housing
- **A**- Aluminium
- **S**- Steel

Housing size ports
- None (std. only cartridge)
- **3B**- 3/8" BSP
- **4B**- 1/2" BSP
- **3S**- SAE 8
- **4S**- SAE 10

**Note:* Information about manual override is available at page S.001

E10N-24

Solenoid valve 2 ways 2 positions, poppet pilot operated, normally closed

Description

Electric cartridge valve on/off designed to hold the load or block flow at high pressure application where low leakage is requested.

Operation mode

COIL NOT POWERED: the valve in closed position blocks the flow from 1 to 2.
COIL POWERED: the valve allows flow from 1 to 2.

GENERAL DATA

Weight without coil: 0,19 Kg (0,42 lbs).
Ambient temperature range: -30 °C a 60 °C with standard seals (NBR).
Max. proof pressure: 420 bar (6.090 psi).
Flow Max: 70 l/min (18,7 gpm).
Cartridge materials: high strength steel, internal parts hardened and grinding.

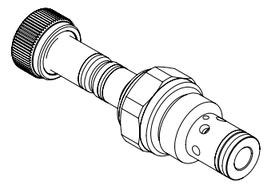

Drawing

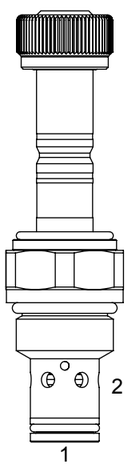

Hydraulic symbol

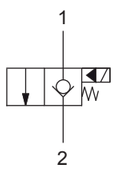

Pressure drop

Oil viscosity: 46 cSt (217 SSU) Fluid temperature: 40 °C

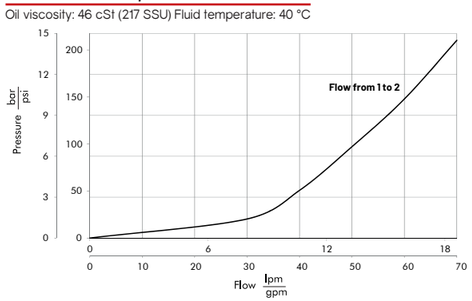

TECHNICAL DATA

HYDRAULIC

Max. working pressure:	350 bar (5.075 psi)
Flow rate:	min 2 l/min (0,5 gpm) max 70 l/min (18,7 gpm)
Fluid: *Viscosity:*	Mineral based oil From 15cSt to 250 cSt
Leakage:	0,25 cc/min (5 drops/min) P max. 350 bar (5.075 psi)
Standard seals:	O-ring NBR Back up ring PTFE
Cavity:	SCN1020
Installation torque:	40 Nm
Coil nut torque:	2 Nm
Max contamination level:	NAS 8 ISO 4406 19/17/14
Fluid temperature range:	From -20 °C to +80 °C
Fatigue cycle life:	1.000.000 cycle at 350 bar
Seal kit std.:	5AG0020

ELECTRIC

Type of voltage:	DC
Insulation index:	H
Nominal voltage:	+/- 10 %
Power at 20 °C:	20,5 W
ED:*	100% with ambient temperature range -20 °C +40 °C
Coil code: *(see page 9.01.002)*	S130-20S

**Note:* For temperature or special conditions contact our sales department.

E10N-24

Inches
Millimeters

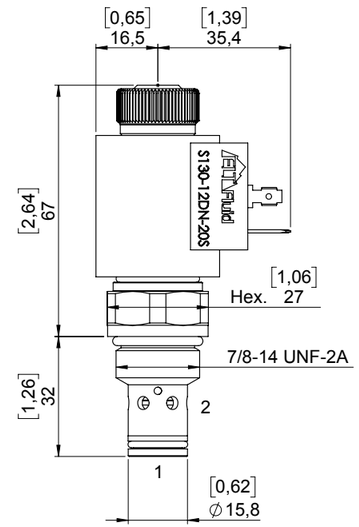

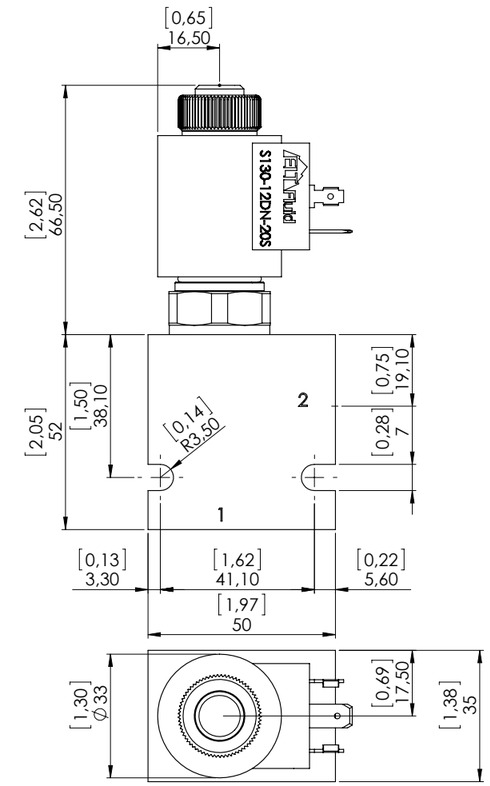

STANDARD HOUSING

Ordering code:	See page 9.03.001
Material:*	Aluminium/Steel Max working pressure for aluminum body: 210 bar Max working pressure for steel body: 350 bar

**Note:* To correctly select the material, in relation to application, see page S.003.

Ordering code

E10N-24 - -

Seals
- None (std. NBR)
- **Y**- Polyurethane
- For other options contact Sales dept.

*Options**
- None (std. without override)
- **S**- Screw out
- **T**- Pull

Connector
- **DN**- Din
- **DU**- Deutsch
- **AM**- Amp Junior

Voltage
- None (std. without coil)
- **12**- Vdc
- **24**- Vdc

Material std. housing
- **A**- Aluminium
- **S**- Steel

Housing size ports
- None (std. only cartridge)
- **3B**- 3/8" BSP
- **4B**- 1/2" BSP
- **3S**- SAE 8
- **4S**- SAE 10

**Note:* Information about manual override is available at page S.001

E10N-25

Solenoid valve 2 ways 2 positions, poppet pilot operated, normally open

Description

Electric cartridge valve on/off designed to hold the load or block flow at high pressure application where low leakage is requested.

Operation mode

COIL NOT POWERED: the valve allows flow from 1 to 2.
COIL POWERED: the valve in closed position blocks the flow from 1 to 2.

GENERAL DATA

Weight without coil: 0,19 Kg (0,42 lbs).
Ambient temperature range: -30 °C a 60 °C with standard seals (NBR).
Max. proof pressure: 420 bar (6.090 psi).
Flow Max: 70 l/min (18,7 gpm).
Cartridge materials: high strength steel, internal parts hardened and grinding.

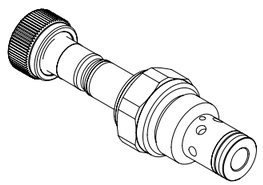

Drawing

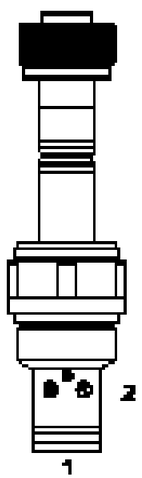

Hydraulic symbol

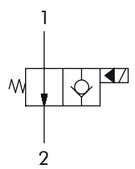

Pressure drop

Oil viscosity: 46 cSt (217 SSU) Fluid temperature: 40 °C

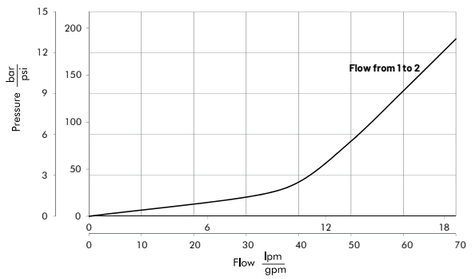

TECHNICAL DATA

HYDRAULIC

Max. working pressure:	350 bar (5.075 psi)
Flow rate:	min 2 l/min (0,5 gpm) max 70 l/min (18,7 gpm)
Fluid: *Viscosity:*	Mineral based oil From 15cSt to 250 cSt
Leakage:	0,25 cc/min (5 drops/min) P max. 350 bar (5.075 psi)
Standard seals:	O-ring NBR Back up ring PTFE
Cavity:	SCN1020
Installation torque:	40 Nm
Coil nut torque:	2 Nm
Max contamination level:	NAS 8 ISO 4406 19/17/14
Fluid temperature range:	From -20 °C to +80 °C
Fatigue cycle life:	1.000.000 cycle at 350 bar
Seal kit std.:	5AG0020

ELECTRIC

Type of voltage:	DC
Insulation index:	H
Nominal voltage:	+/- 10 %
Power at 20 °C:	20,5 W
ED:*	100% with ambient temperature range -20 °C +40 °C
Coil code: *(see page 9.01.002)*	S130-20S

**Note:* For temperature or special conditions contact our sales department.

E10N-25

Inches
Millimeters

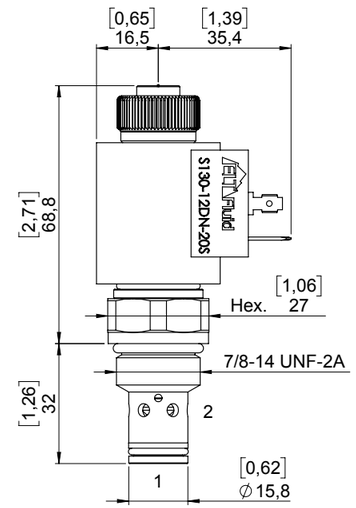

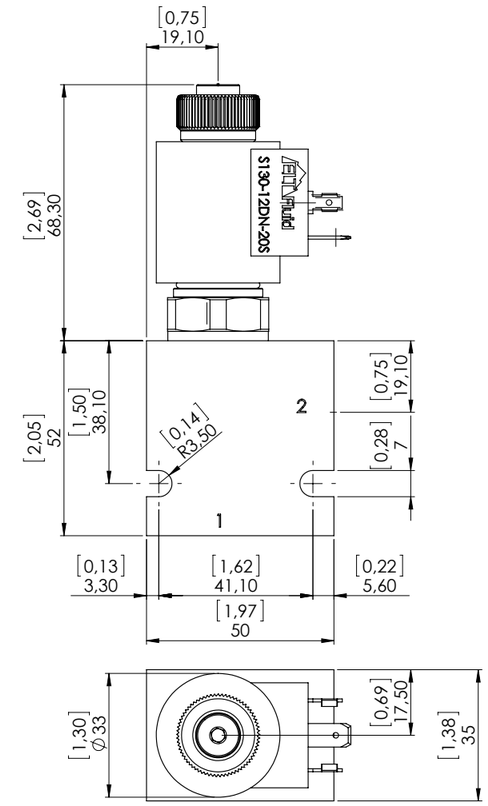

STANDARD HOUSING

Ordering code:	See page 9.03.001
Material:*	Aluminium/Steel Max working pressure for aluminum body: 210 bar Max working pressure for steel body: 350 bar

**Note:* To correctly select the material, in relation to application, see page S.003.

Ordering code

E10N-25 - -

Seals
- None (std. NBR)
- **Y**- Polyurethane
- For other options contact Sales dept.

*Options**
- None (std. without override)
- **P**- Push
- **PT**- Push and twist
- **SV**- Screw in

Connector
- **DN**- Din
- **DU**- Deutsch
- **AM**- Amp Junior

Voltage
- None (std. without coil)
- **12**- Vdc
- **24**- Vdc

Material std. housing
- **A**- Aluminium
- **S**- Steel

Housing size ports
- None (std. only cartridge)
- **3B**- 3/8" BSP
- **4B**- 1/2" BSP
- **3S**- SAE 8
- **4S**- SAE 10

**Note:* Information about manual override is available at page S.001

E10N-26

Solenoid valve 2 ways 2 positions, poppet pilot operated, normally closed

Description

Electric cartridge valve on/off designed to hold the load or block flow at high pressure application where low leakage is requested.

Operation mode

COIL NOT POWERED: the valve in closed position blocks the flow from 1 to 2.
COIL POWERED: the valve allows flow in both directions.
From 1 to 2 and from 2 to 1.

GENERAL DATA

Weight without coil: 0,19 Kg (0,42 lbs).
Ambient temperature range: -30 °C a 60 °C with standard seals (NBR).
Max. proof pressure: 420 bar (6.090 psi).
Flow Max: 70 l/min (18,7 gpm).
Cartridge materials: high strength steel, internal parts hardened and grinding.

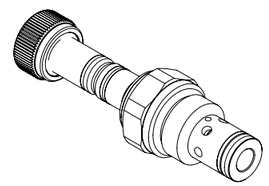

Drawing

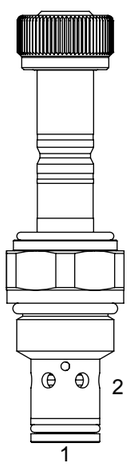

Hydraulic symbol

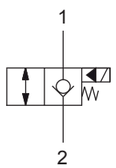

Pressure drop

Oil viscosity: 46 cSt (217 SSU) Fluid temperature: 40 °C

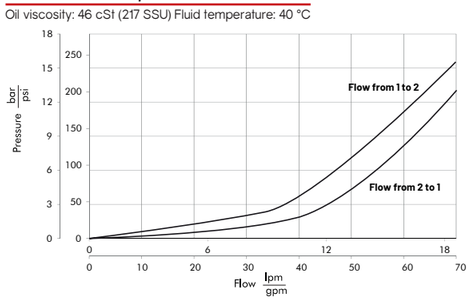

TECHNICAL DATA

HYDRAULIC

Max. working pressure:	350 bar (5.075 psi)
Flow rate:	min 2 l/min (0,5 gpm) max 70 l/min (18,7 gpm)
Fluid: *Viscosity:*	Mineral based oil From 15cSt to 250 cSt
Leakage:	0,25 cc/min (5 drops/min) P max. 350 bar (5.075 psi)
Standard seals:	O-ring NBR Back up ring PTFE
Cavity:	SCN1020
Installation torque:	40 Nm
Coil nut torque:	2 Nm
Max contamination level:	NAS 8 ISO 4406 19/17/14
Fluid temperature range:	Da -20 °C a +80 °C
Fatigue cycle life:	1.000.000 cycle at 350 bar
Seal kit std.:	5AG0020

ELECTRIC

Type of voltage:	DC
Insulation index:	H
Nominal voltage:	+/- 10 %
Power at 20 °C:	20,5 W
ED:*	100% with ambient temperature range -20 °C +40 °C
Coil code: *(see page 9.01.002)*	S130-20S

**Note:* For temperature or special conditions contact our sales department.

E10N-26

Inches
Millimeters

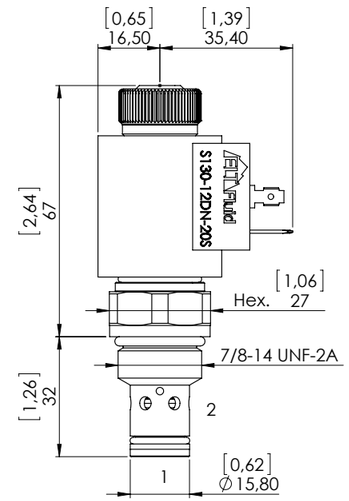

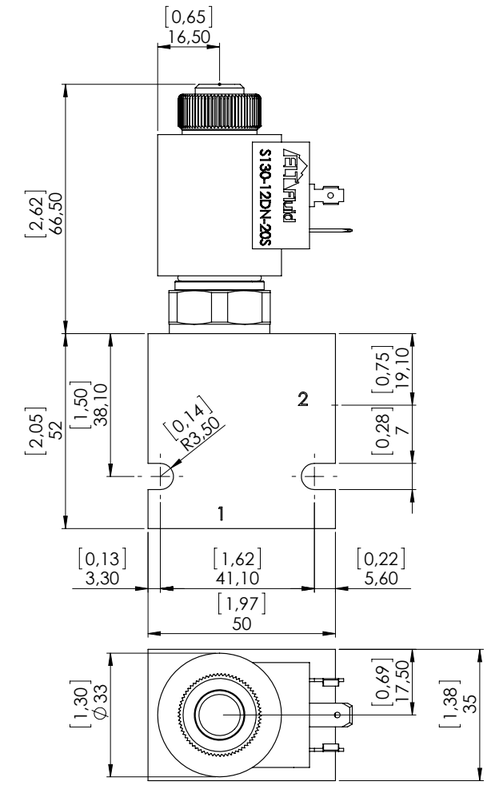

STANDARD HOUSING

Ordering code:	See page 9.03.001
Material:*	Aluminium/Steel Max working pressure for aluminum body: 210 bar Max working pressure for steel body: 350 bar

**Note:* To correctly select the material, in relation to application, see page S.003.

Ordering code

E10N-26 - -

Seals
- None (std. NBR)
- **Y**- Polyurethane
- For other options contact Sales dept.

*Options**
- None (std. without override)
- **S**- Screw out
- **T**- Pull

Connector
- **DN**- Din
- **DU**- Deutsch
- **AM**- Amp Junior

Voltage
- None (std. without coil)
- **12**- Vdc
- **24**- Vdc

Material std. housing
- **A**- Aluminium
- **S**- Steel

Housing size ports
- None (std. only cartridge)
- **3B**- 3/8" BSP
- **4B**- 1/2" BSP
- **3S**- SAE 8
- **4S**- SAE 10

**Note:* Information about manual override is available at page S.001

E10N-27

Solenoid valve 2 ways 2 positions, poppet pilot operated, normally open

Description

Electric cartridge valve on/off designed to hold the load or block flow at high pressure application where low leakage is requested.

Operation mode

COIL NOT POWERED: when is not energized the coil, the valve allow flow in both directions.
From 1 to 2 and 2 to 1.
COIL POWERED: when is energized the coil, this valve block flow from 1 to 2 causing close position.

GENERAL DATA

Weight without coil: 0,19 Kg (0,42 lbs).
Ambient temperature range: -30 °C a 60 °C with standard seals (NBR).
Max. proof pressure: 420 bar (6.090 psi).
Flow Max: 70 l/min (18,7 gpm).
Cartridge materials: high strength steel, internal parts hardened and grinding.

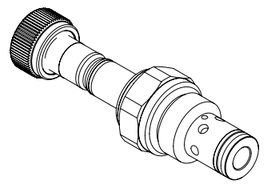

Drawing

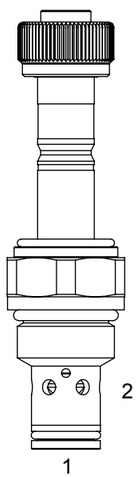

Hydraulic symbol

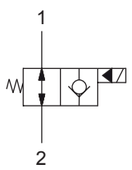

Pressure drop

Oil viscosity: 46 cSt (217 SSU) Fluid temperature: 40 °C

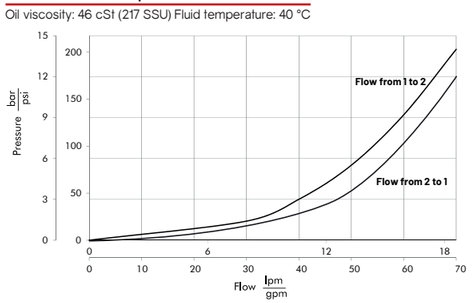

TECHNICAL DATA

HYDRAULIC	
Max. working pressure:	350 bar (5.075 psi)
Flow rate:	min 2 l/min (0,5 gpm) max 70 l/min (18,7 gpm)
Fluid: *Viscosity:*	Mineral based oil From 15cSt to 250 cSt
Leakage:	0,25 cc/min (5 drops/min) P max. 350 bar (5.075 psi)
Standard seals:	O-ring NBR Back up ring PTFE
Cavity:	SCN1020
Installation torque:	40 Nm
Coil nut torque:	2 Nm
Max contamination level:	NAS 8 ISO 4406 19/17/14
Fluid temperature range:	From -20 °C to +80 °C
Fatigue cycle life:	1.000.000 cycle at 350 bar
Seal kit std.:	5AG0020
ELECTRIC	
Type of voltage:	DC
Insulation index:	H
Nominal voltage:	+/- 10 %
Power at 20 °C:	20,5 W
ED:*	100% with ambient temperature range -20 °C +40 °C
Coil code: *(see page 9.01.002)*	S130-20S

**Note:* For temperature or special conditions contact our sales department.

E10N-27

Inches
Millimeters

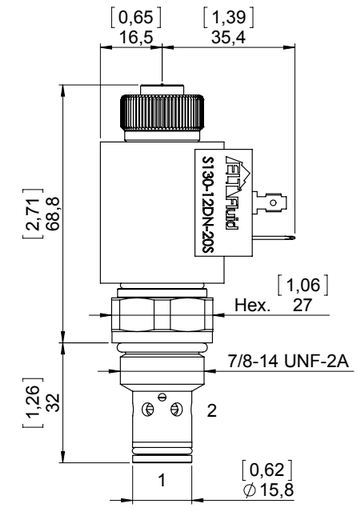

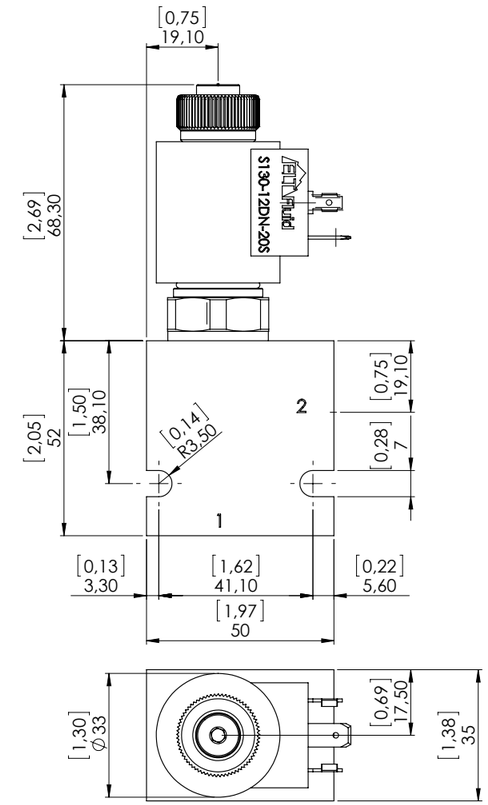

STANDARD HOUSING

Ordering code:	See page 9.03.001
Material:*	Aluminium/Steel Max working pressure for aluminum body: 210 bar Max working pressure for steel body: 350 bar

**Note:* To correctly select the material, in relation to application, see page S.003.

Ordering code

E10N-27 - -

Seals
- None (std. NBR)
- **Y**- Polyurethane
- For other options contact Sales dept.

*Options**
- None (std. without override)
- **P**- Push
- **PT**- Push and twist
- **SV**- Screw in

Connector
- **DN**- Din
- **DU**- Deutsch
- **AM**- Amp Junior

Voltage
- None (std. without coil)
- **12**- Vdc
- **24**- Vdc

Material std. housing
- **A**- Aluminium
- **S**- Steel

Housing size ports
- None (std. only cartridge)
- **3B**- 3/8" BSP
- **4B**- 1/2" BSP
- **3S**- SAE 8
- **4S**- SAE 10

**Note:* Information about manual override is available at page S.001

E10N-28

Solenoid valve 2 ways 2 positions, poppet pilot operated, normally closed

Description

Electric cartridge valve on/off designed to hold the load or block flow at high pressure application, where low leakage is requested.

Operation mode

COIL NOT POWERED: the valve in closed position blocks flow in both direction. From 2 to 1 and 1 to 2.
COIL POWERED: the valve allows flow in both directions.
From 2 to 1 and from 1 to 2.

GENERAL DATA

Weight without coil: 0,19 Kg (0,42 lbs).
Ambient temperature range: -30 °C a 60 °C with standard seals (NBR).
Max. proof pressure: 420 bar (6.090 psi).
Flow Max: 70 l/min (18,7 gpm).
Cartridge materials: high strength steel, internal parts hardened and grinding.

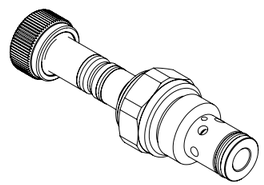

Drawing

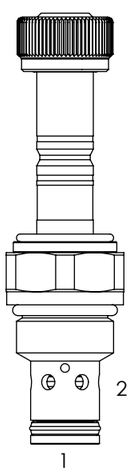

Hydraulic symbol

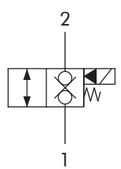

Pressure drop

Oil viscosity: 46 cSt (217 SSU) Fluid temperature: 40 °C

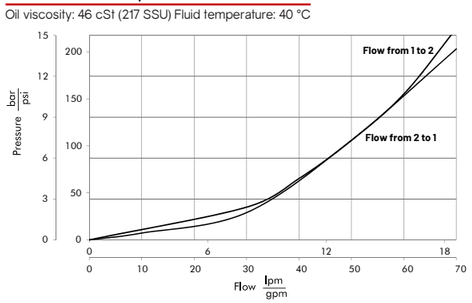

TECHNICAL DATA

HYDRAULIC

Max. working pressure:	350 bar (5.075 psi)
Flow rate:	min 2 l/min (0,5 gpm) max 70 l/min (18,7 gpm)
Fluid: *Viscosity:*	Mineral based oil From 15cSt to 250 cSt
Leakage:	0,5 cc/min (10 drops/min) P max. 350 bar (5.075 psi)
Standard seals:	O-ring NBR Seals Polyurethane
Cavity:	SCN1020
Installation torque:	40 Nm
Coil nut torque:	2 Nm
Max contamination level:	NAS 8 ISO 4406 19/17/14
Fluid temperature range:	From -20 °C to +80 °C
Fatigue cycle life:	1.000.000 cycle at 350 bar
Seal kit std.:	5AG0026

ELECTRIC

Type of voltage:	DC
Insulation index:	H
Nominal voltage:	+/- 10 %
Power at 20 °C:	20,5 W
ED:*	100% with ambient temperature range -20 °C +40 °C
Coil code: *(see page 9.01.002)*	S130-20S

**Note:* For temperature or special conditions contact our sales department.

E10N-28

Inches
Millimeters

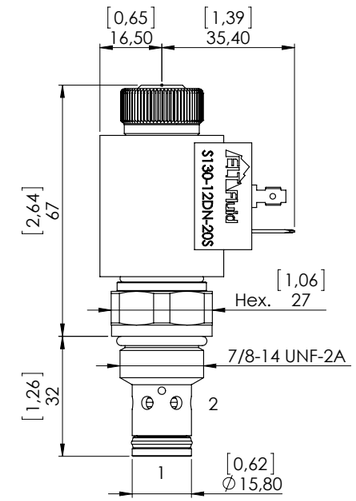

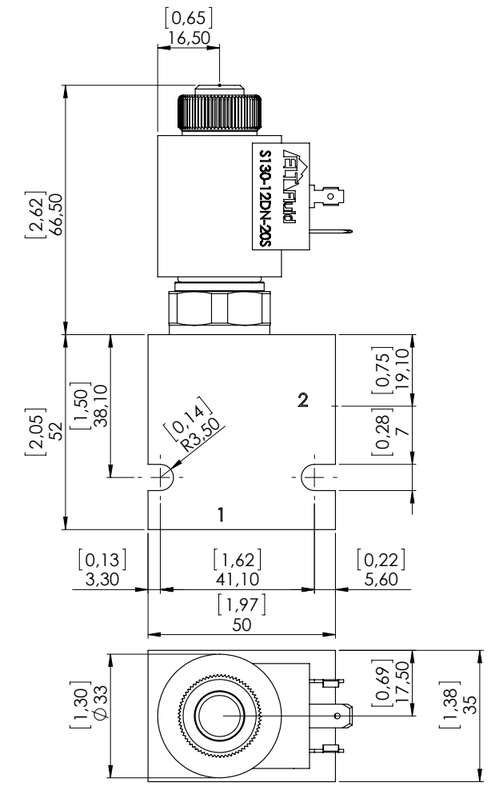

STANDARD HOUSING

Ordering code:	See page 9.03.001
Material:*	Aluminium/Steel Max working pressure for aluminum body: 210 bar Max working pressure for steel body: 350 bar

**Note:* To correctly select the material, in relation to application, see page S.003.

Ordering code

E10N-28 - -

Seals
- None (std. NBR+Polyurethane)
- **Y**- Polyurethane
- For other options contact Sales dept.

*Options**
- None (std. without override)
- **S**- Screw out
- **T**- Pull

Connector
- **DN**- Din
- **DU**- Deutsch
- **AM**- Amp Junior

Voltage
- None (std. without coil)
- **12**- Vdc
- **24**- Vdc

Material std. housing
- **A**- Aluminium
- **S**- Steel

Housing size ports
- None (std. only cartridge)
- **3B**- 3/8" BSP
- **4B**- 1/2" BSP
- **3S**- SAE 8
- **4S**- SAE 10

**Note:* Information about manual override is available at page S.001

E10N-29

Solenoid valve 2 ways 2 positions, poppet pilot operated, normally open

Description

Electric cartridge valve on/off designed to hold the load or block flow at high pressure application, where low leakage is requested.

Operation mode

COIL NOT POWERED: the valve allows flow in both directions. From 1 to 2 and from 2 to 1.
COIL POWERED: the valve in closed position blocks flow in both direction. From 2 to 1 and 1 to 2.

GENERAL DATA

Weight without coil: 0,19 Kg (0,42 lbs).
Ambient temperature range: -30 °C a 60 °C with standard seals (NBR).
Max. proof pressure: 420 bar (6.090 psi).
Flow Max: 70 l/min (18,7 gpm).
Cartridge materials: high strength steel, internal parts hardened and grinding.

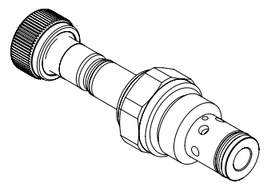

Drawing

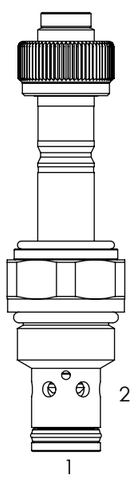

Hydraulic symbol

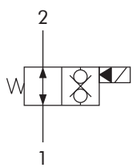

Pressure drop

Oil viscosity: 46 cSt (217 SSU) Fluid temperature: 40 °C

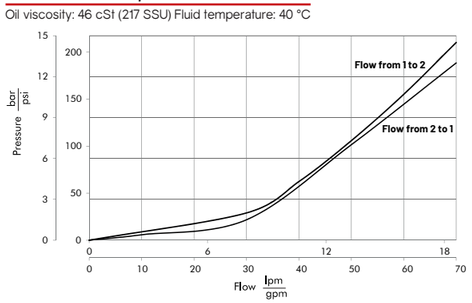

TECHNICAL DATA

HYDRAULIC

Max. working pressure:	350 bar (5.075 psi)
Flow rate:	min 2 l/min (0,5 gpm) max 70 l/min (18,7 gpm)
Fluid: *Viscosity:*	Mineral based oil From 15cSt to 250 cSt
Leakage:	0,5 cc/min (10 drops/min) P max. 350 bar (5.075 psi)
Standard seals:	O-ring NBR Seals Polyurethane
Cavity:	SCN1020
Installation torque:	40 Nm
Coil nut torque:	2 Nm
Max contamination level:	NAS 8 ISO 4406 19/17/14
Fluid temperature range:	From -20 °C to +80 °C
Fatigue cycle life:	1.000.000 cycle at 350 bar
Seal kit std.:	5AG0027

ELECTRIC

Type of voltage:	DC
Insulation index:	H
Nominal voltage:	+/- 10 %
Power at 20 °C:	20,5 W
ED:*	100% with ambient temperature range -20 °C +40 °C
Coil code: *(see page 9.01.002)*	S130-20S

**Note:* For temperature or special conditions contact our sales department.

E10N-29

Inches
Millimeters

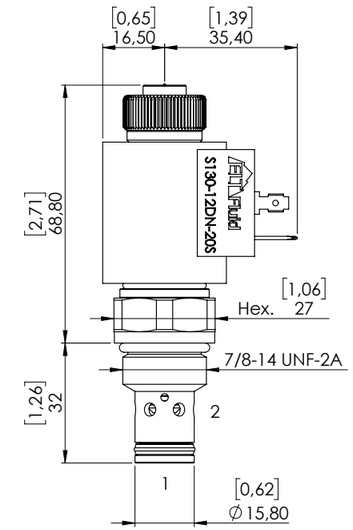

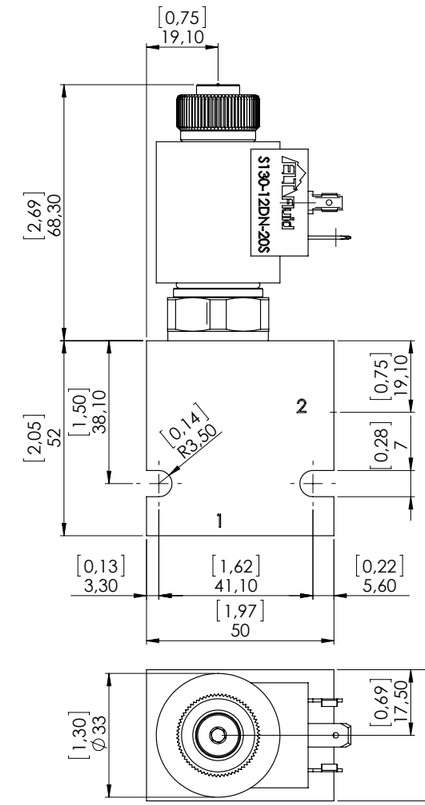

STANDARD HOUSING

Ordering code:	See page 9.03.001
Material:*	Aluminium/Steel Max working pressure for aluminum body: 210 bar Max working pressure for steel body: 350 bar

**Note:* To correctly select the material, in relation to application, see page S.003.

Ordering code

E10N-29 - -

Seals
- None (std. NBR+Polyurethane)
- **Y**- Polyurethane
- For other options contact Sales dept.

*Options**
- None (std. without override)
- **P**- Push
- **PT**- Push and twist
- **SV**- Screw in

Connector
- **DN**- Din
- **DU**- Deutsch
- **AM**- Amp Junior

Voltage
- None (std. without coil)
- **12**- Vdc
- **24**- Vdc

Material std. housing
- **A**- Aluminium
- **S**- Steel

Housing size ports
- None (std. only cartridge)
- **3B**- 3/8" BSP
- **4B**- 1/2" BSP
- **3S**- SAE 8
- **4S**- SAE 10

**Note:* Information about manual override is available at page S.001

E12N-20

Solenoid valve 2 ways 2 positions, poppet pilot operated, normally closed

Description

Electric cartridge valve on/off designed to hold the load or block flow at high pressure application, where low leakage is requested.

Operation mode

COIL NOT POWERED: the valve in closed position blocks the flow from 2 to 1.
COIL POWERED: the valve allows flow from 2 to 1.

GENERAL DATA

Weight without coil: 0,26 Kg (0,58 lbs).
Ambient temperature range: -30 °C a 60 °C with standard seals (NBR).
Max. proof pressure: 420 bar (6.090 psi).
Flow Max: 110 l/min (29 gpm).
Cartridge materials: high strength steel, internal parts hardened and grinding.

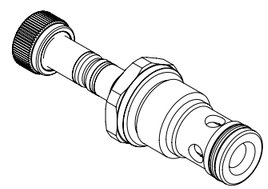

Drawing

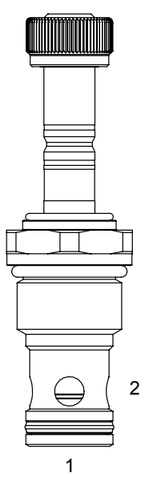

Hydraulic symbol

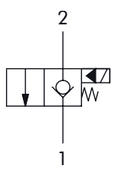

Pressure drop

Oil viscosity: 46 cSt (217 SSU) Fluid temperature: 40 °C

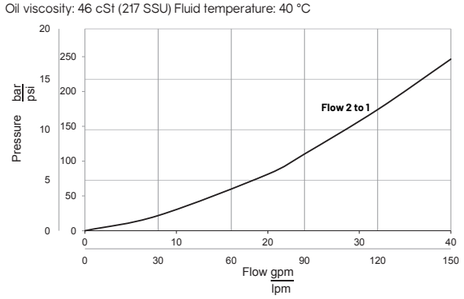

TECHNICAL DATA

HYDRAULIC	
Max. working pressure:	350 bar (5.075 psi)
Flow rate:	min 5 l/min (1,3 gpm) max 110 l/min (29 gpm)
Fluid: *Viscosity:*	Mineral based oil From 15cSt to 250 cSt
Leakage:	0,25 cc/min (5 drops/min) P max. 350 bar (5.075 psi)
Standard seals:	O-ring NBR Seals Polyurethane
Cavity:	SCN1220
Installation torque:	60 Nm
Coil nut torque:	2 Nm
Max contamination level:	NAS 8 ISO 4406 19/17/14
Fluid temperature range:	From -20 to +80 °C
Fatigue cycle life:	1.000.000 cycle at 350 bar
Seal kit std.:	5AG0028
ELECTRIC	
Type of voltage:	DC
Insulation index:	H
Nominal voltage:	+/- 10 %
Power at 20 °C:	20,5 W
ED:*	100% with ambient temperature range -20 °C +40 °C
Coil code: *(see page 9.01.002)*	S130-20S

**Note:* For temperature or special conditions contact our sales department.

Inches
Millimeters

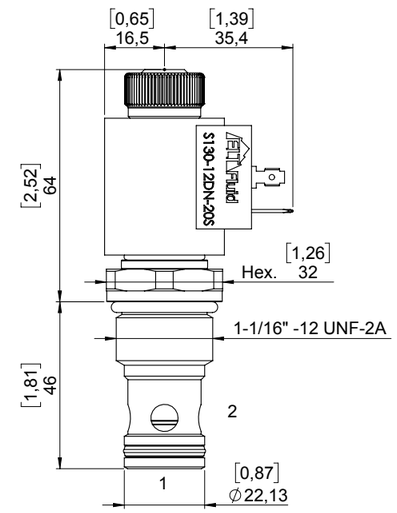

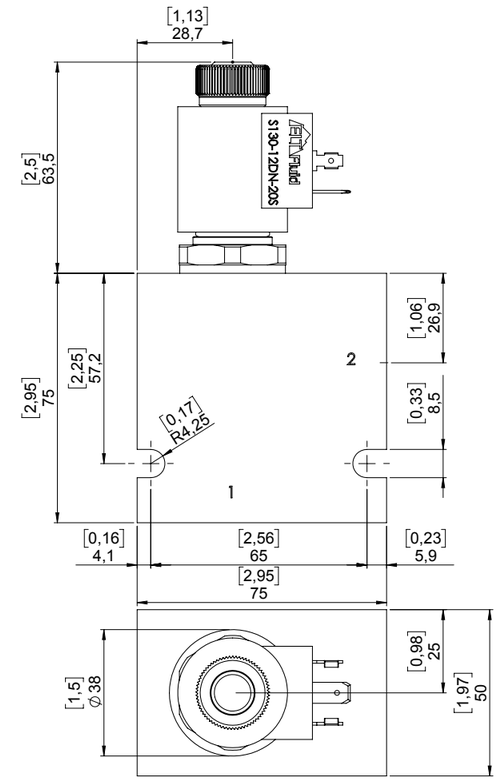

STANDARD HOUSING

Ordering code:	See page 9.04.001
Material:*	Aluminium/Steel Max working pressure for aluminum body: 210 bar Max working pressure for steel body: 350 bar

**Note:* To correctly select the material, in relation to application, see page S.003.

Ordering code

E12N-20 - -

Seals
- None (std. NBR)
- **Y**- Polyurethane
- For other options contact Sales dept.

Options*
- None (std. without override)
- **S**- Screw out

Connector
- **DN**- Din
- **DU**- Deutsch
- **AM**- Amp Junior

Voltage
- None (std. without coil)
- **12**- Vdc
- **24**- Vdc

Material std. housing
- **A**- Aluminium
- **S**- Steel

Housing size ports
- None (std. only cartridge)
- **4B**- 1/2" BSP
- **5B**- 3/4" BSP
- **4S**- SAE 10
- **5S**- SAE 12

**Note:* Information about manual override is available at page S.001

E12N-21

Solenoid valve 2 ways 2 positions, poppet pilot operated, normally open

Description

Electric cartridge valve on/off designed to hold the load or block flow at high pressure application, where low leakage is requested.

Operation mode

COIL NOT POWERED: the valve allows flow from 2 to 1.
COIL POWERED: the valve in closed position blocks the flow from 2 to 1.

GENERAL DATA

Weight without coil: 0,26 Kg (0,58 lbs).
Ambient temperature range: -30 °C a 60 °C with standard seals (NBR).
Max. proof pressure: 420 bar (6.090 psi).
Flow Max: 110 l/min (29 gpm).
Cartridge materials: high strength steel, internal parts hardened and grinding.

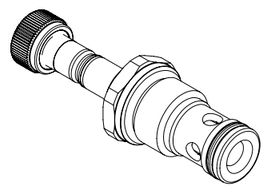

Drawing

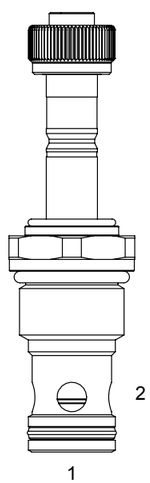

Hydraulic symbol

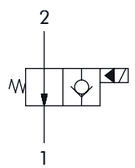

Pressure drop

Oil viscosity: 46 cSt (217 SSU) Fluid temperature: 40 °C

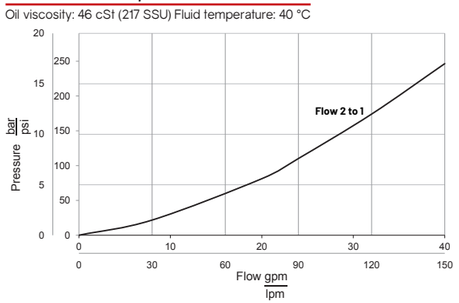

TECHNICAL DATA

HYDRAULIC

Max. working pressure:	350 bar (5.075 psi)
Flow rate:	min 5 l/min (1,3 gpm) max 110 l/min (29 gpm)
Fluid: *Viscosity:*	Mineral based oil From 15cSt to 250 cSt
Leakage:	0,25 cc/min (5 drops/min) P max. 350 bar (5.075 psi)
Standard seals:	O-ring NBR Seals Polyurethane
Cavity:	SCN1220
Installation torque:	60 Nm
Coil nut torque:	2 Nm
Max contamination level:	NAS 8 ISO 4406 19/17/14
Fluid temperature range:	From -20 to +80 °C
Fatigue cycle life:	1.000.000 cycle at 350 bar
Seal kit std.:	5AG0028

ELECTRIC

Type of voltage:	DC
Insulation index:	H
Nominal voltage:	+/- 10 %
Power at 20 °C:	20,5 W
ED:*	100% with ambient temperature range -20 °C +40 °C
Coil code: *(see page 9.01.002)*	S130-20S

**Note:* For temperature or special conditions contact our sales department.

E12N-21

Inches
Millimeters

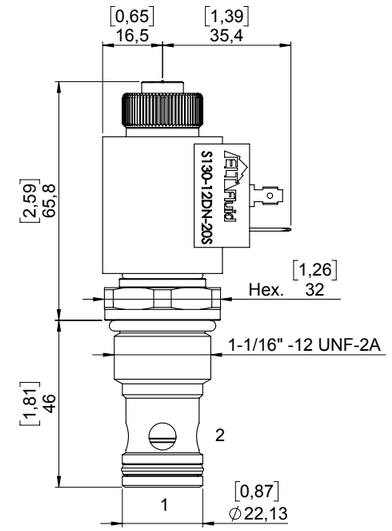

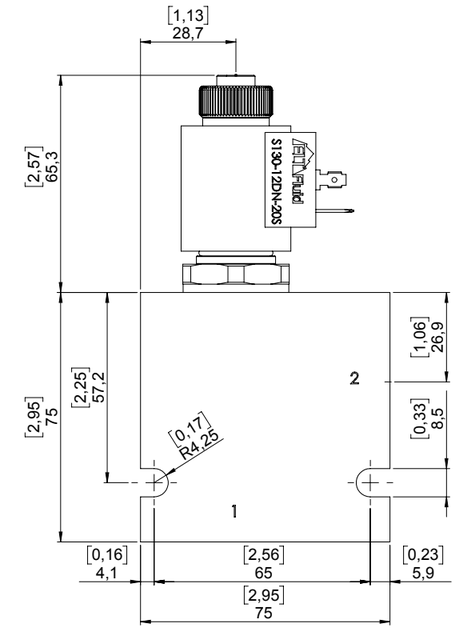

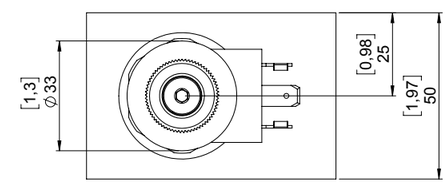

STANDARD HOUSING

Ordering code:	See page 9.04.001
Material:*	Aluminium/Steel Max working pressure for aluminum body: 210 bar Max working pressure for steel body: 350 bar

**Note:* To correctly select the material, in relation to application, see page S.003.

Ordering code

E12N-21 - -

Seals
- None (std. NBR)
- **Y**- Polyurethane
- For other options contact Sales dept.

*Options**
- None (std. without override)
- **P**- Push
- **PT**- Push and twist
- **SV**- Screw in

Connector
- **DN**- Din
- **DU**- Deutsch
- **AM**- Amp Junior

Voltage
- None (std. without coil)
- **12**- Vdc
- **24**- Vdc

Material std. housing
- **A**- Aluminium
- **S**- Steel

Housing size ports
- None (std. only cartridge)
- **4B**- 1/2" BSP
- **5B**- 3/4" BSP
- **4S**- SAE 10
- **5S**- SAE 12

**Note:* Information about manual override is available at page S.001

E12N-22

Solenoid valve 2 ways 2 positions, poppet pilot operated, normally closed

Description

Electric cartridge valve on/off designed to hold the load or block flow at high pressure application, where low leakage is requested.

Operation mode

COIL NOT POWERED: the valve in closed position blocks the flow from 2 to 1.
COIL POWERED: the valve allows flow in both directions.
From 2 to 1 and from 1 to 2.

GENERAL DATA

Weight without coil: 0,26 Kg (0,58 lbs).
Ambient temperature range: -30 °C a 60 °C with standard seals (NBR).
Max. proof pressure: 420 bar (6.090 psi).
Flow Max: 110 l/min (29 gpm).
Cartridge materials: high strength steel, internal parts hardened and grinding.

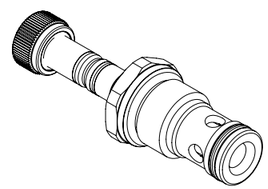

Drawing

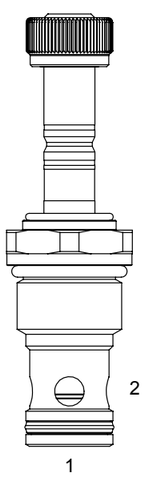

Hydraulic symbol

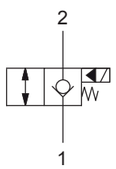

Pressure drop

Oil viscosity: 46 cSt (217 SSU) Fluid temperature: 40 °C

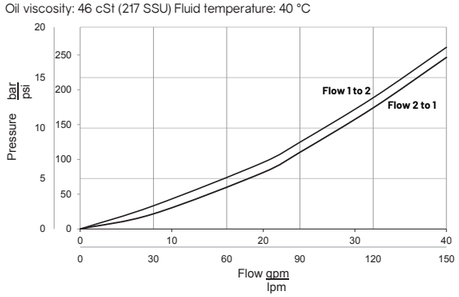

TECHNICAL DATA

HYDRAULIC	
Max. working pressure:	350 bar (5.075 psi)
Flow rate:	min 5 l/min (1,3 gpm) max 110 l/min (29 gpm)
Fluid: *Viscosity:*	Mineral based oil From 15cSt to 250 cSt
Leakage:	0,25 cc/min (5 drops/min) P max. 350 bar (5.075 psi)
Standard seals:	O-ring NBR Seals Polyurethane
Cavity:	SCN1220
Installation torque:	60 Nm
Coil nut torque:	2 Nm
Max contamination level:	NAS 8 ISO 4406 19/17/14
Fluid temperature range:	From -20 to +80 °C
Fatigue cycle life:	1.000.000 cycle at 350 bar
Seal kit std.:	5AG0028
ELECTRIC	
Type of voltage:	DC
Insulation index:	H
Nominal voltage:	+/- 10 %
Power at 20 °C:	20,5 W
ED:*	100% with ambient temperature range -20 °C +40 °C
Coil code: *(see page 9.01.002)*	S130-20S

**Note:* For temperature or special conditions contact our sales department.

E12N-22

Inches
Millimeters

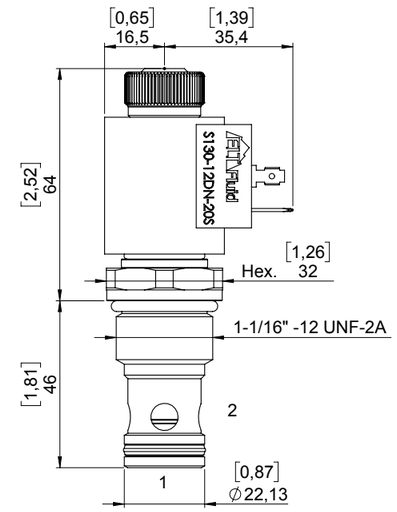

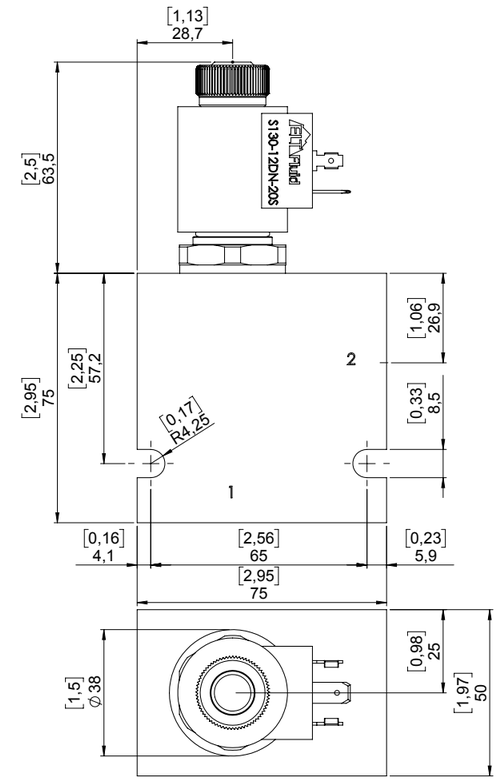

STANDARD HOUSING

Ordering code:	See page 9.04.001
Material:*	Aluminium/Steel Max working pressure for aluminum body: 210 bar Max working pressure for steel body: 350 bar

**Note:* To correctly select the material, in relation to application, see page S.003.

Ordering code

E12N-22 - -

Seals
- None (std. NBR)
- **Y**- Polyurethane
- For other options contact Sales dept.

*Options**
- None (std. without override)
- **S**- Screw out

Connector
- **DN**- Din
- **DU**- Deutsch
- **AM**- Amp Junior

Voltage
- None (std. without coil)
- **12**- Vdc
- **24**- Vdc

Material std. housing
- **A**- Aluminium
- **S**- Steel

Housing size ports
- None (std. only cartridge)
- **4B**- 1/2" BSP
- **5B**- 3/4" BSP
- **4S**- SAE 10
- **5S**- SAE 12

**Note:* Information about manual override is available at page S.001

E12N-23

Solenoid valve 2 ways 2 positions, poppet pilot operated, normally open

Description

Electric cartridge valve on/off designed to hold the load or block flow at high pressure application, where low leakage is requested.

Operation mode

COIL NOT POWERED: the valve allows flow in both directions.
From 2 to 1 and from 1 to 2.
COIL POWERED: the valve in closed position blocks the flow from 2 to 1.

GENERAL DATA

Weight without coil: 0,26 Kg (0,58 lbs).
Ambient temperature range: -30 °C a 60 °C with standard seals (NBR).
Max. proof pressure: 420 bar (6.090 psi).
Flow Max: 110 l/min (29 gpm).
Cartridge materials: high strength steel, internal parts hardened and grinding.

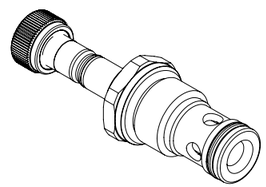

Drawing

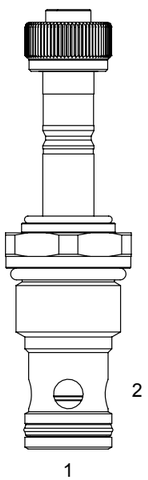

Hydraulic symbol

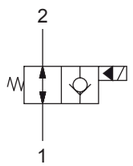

Pressure drop

Oil viscosity: 46 cSt (217 SSU) Fluid temperature: 40 °C

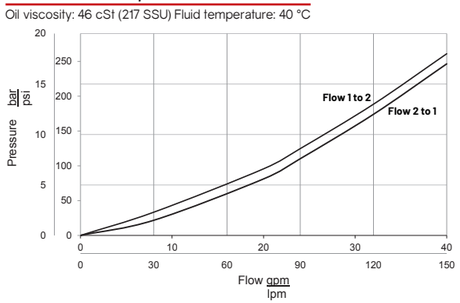

TECHNICAL DATA

HYDRAULIC

Max. working pressure:	350 bar (5.075 psi)
Flow rate:	min 5 l/min (1,3 gpm) max 110 l/min (29 gpm)
Fluid: *Viscosity:*	Mineral based oil From 15cSt to 250 cSt
Leakage:	0,25 cc/min (5 drops/min) P max. 350 bar (5.075 psi)
Standard seals:	O-ring NBR Seals Polyurethane
Cavity:	SCN1220
Installation torque:	60 Nm
Coil nut torque:	2 Nm
Max contamination level:	NAS 8 ISO 4406 19/17/14
Fluid temperature range:	From -20 to +80 °C
Fatigue cycle life:	1.000.000 cycle at 350 bar
Seal kit std.:	5AG0028

ELECTRIC

Type of voltage:	DC
Insulation index:	H
Nominal voltage:	+/- 10 %
Power at 20 °C:	20,5 W
ED:*	100% with ambient temperature range -20 °C +40 °C
Coil code: *(see page 9.01.002)*	S130-20S

**Note:* For temperature or special conditions contact our sales department.

E12N-23

Inches
Millimeters

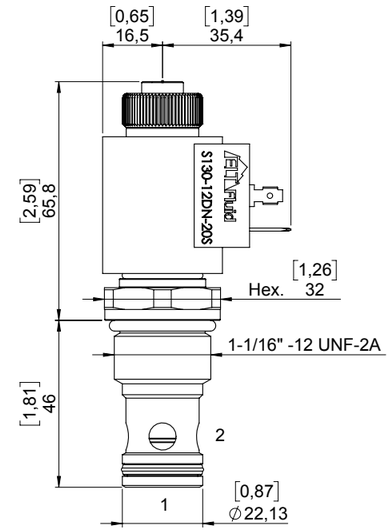

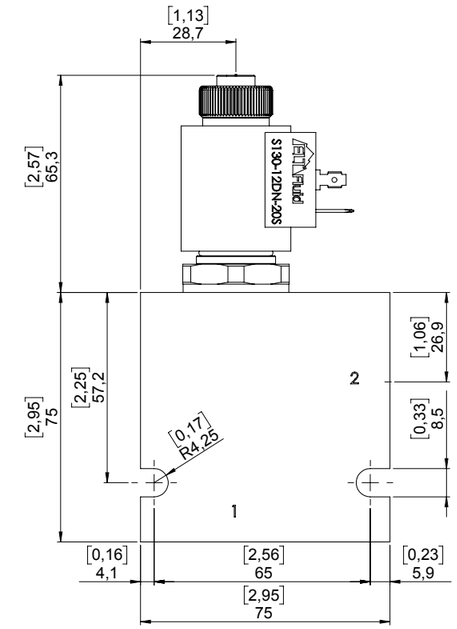

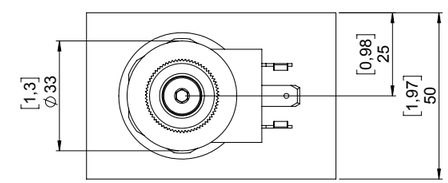

STANDARD HOUSING

Ordering code:	See page 9.04.001
Material:*	Aluminium/Steel Max working pressure for aluminum body: 210 bar Max working pressure for steel body: 350 bar

**Note:* To correctly select the material, in relation to application, see page S.003.

Ordering code

E12N-23 - - -

Seals
- None (std. NBR)
- **Y**- Polyurethane
- For other options contact Sales dept.

*Options**
- None (std. without override)
- **P**- Push
- **PT**- Push and twist
- **SV**- Screw in

Connector
- **DN**- Din
- **DU**- Deutsch
- **AM**- Amp Junior

Voltage
- None (std. without coil)
- **12**- Vdc
- **24**- Vdc

Material std. housing
- **A**- Aluminium
- **S**- Steel

Housing size ports
- None (std. only cartridge)
- **4B**- 1/2" BSP
- **5B**- 3/4" BSP
- **4S**- SAE 10
- **5S**- SAE 12

**Note:* Information about manual override is available at page S.001

E12N-24

Solenoid valve 2 ways 2 positions, poppet pilot operated, normally closed

Description

Electric cartridge valve on/off designed to hold the load or block flow at high pressure application, where low leakage is requested.

Operation mode

COIL NOT POWERED: the valve in closed position blocks the flow from 1 to 2.
COIL POWERED: the valve allows flow from 1 to 2.

GENERAL DATA

Weight without coil: 0,26 Kg (0,58 lbs).
Ambient temperature range: -30 °C a 60 °C with standard seals (NBR).
Max. proof pressure: 420 bar (6.090 psi).
Flow Max: 110 l/min (29 gpm).
Cartridge materials: high strength steel, internal parts hardened and grinding.

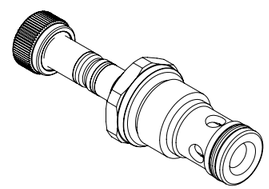

Drawing

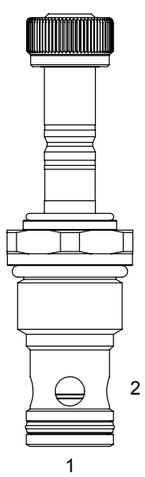

Hydraulic symbol

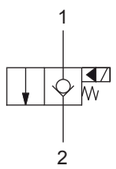

Pressure drop

Oil viscosity: 46 cSt (217 SSU) Fluid temperature: 40 °C

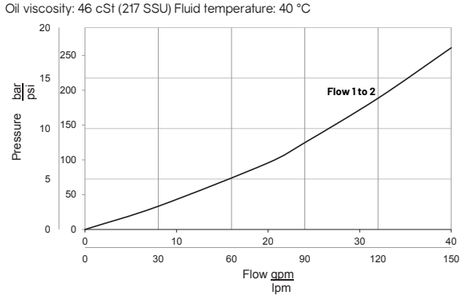

TECHNICAL DATA

HYDRAULIC

Max. working pressure:	350 bar (5.075 psi)
Flow rate:	min 5 l/min (1,3 gpm) max 110 l/min (29 gpm)
Fluid: *Viscosity:*	Mineral based oil From 15cSt to 250 cSt
Leakage:	0,25 cc/min (5 drops/min) P max. 350 bar (5.075 psi)
Standard seals:	O-ring NBR Seals Polyurethane
Cavity:	SCN1220
Installation torque:	60 Nm
Coil nut torque:	2 Nm
Max contamination level:	NAS 8 ISO 4406 19/17/14
Fluid temperature range:	From -20 to +80 °C
Fatigue cycle life:	1.000.000 cycle at 350 bar
Seal kit std.:	5AG0028

ELECTRIC

Type of voltage:	DC
Insulation index:	H
Nominal voltage:	+/- 10 %
Power at 20 °C:	20,5 W
ED:*	100% with ambient temperature range -20 °C +40 °C
Coil code: *(see page 9.01.002)*	S130-20S

**Note:* For temperature or special conditions contact our sales department.

E12N-24

Inches
Millimeters

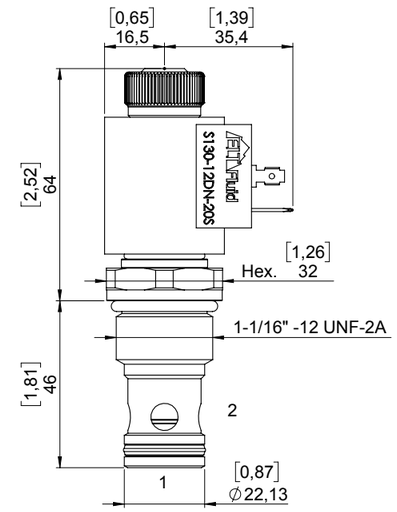

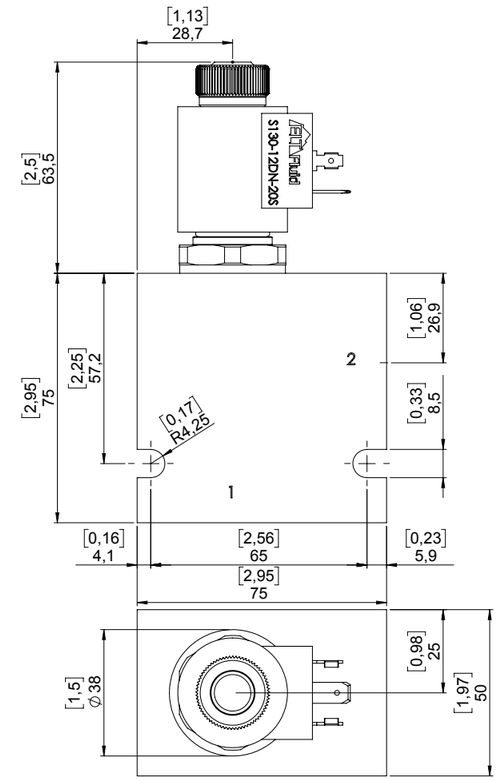

STANDARD HOUSING

Ordering code:	See page 9.04.001
Material:*	Aluminium/Steel Max working pressure for aluminum body: 210 bar Max working pressure for steel body: 350 bar

**Note:* To correctly select the material, in relation to application, see page S.003.

Ordering code

E12N-24 - -

Seals
- None (std. NBR)
- **Y**- Polyurethane
- For other options contact Sales dept.

*Options**
- None (std. without override)
- **S**- Screw out

Connector
- **DN**- Din
- **DU**- Deutsch
- **AM**- Amp Junior

Voltage
- None (std. without coil)
- **12**- Vdc
- **24**- Vdc

Material std. housing
- **A**- Aluminium
- **S**- Steel

Housing size ports
- None (std. only cartridge)
- **4B**- 1/2" BSP
- **5B**- 3/4" BSP
- **4S**- SAE 10
- **5S**- SAE 12

**Note:* Information about manual override is available at page S.001

E12N-25

Solenoid valve 2 ways 2 positions, poppet pilot operated, normally open

Description

Electric cartridge valve on/off designed to hold the load or block flow at high pressure application, where low leakage is requested.

Operation mode

COIL NOT POWERED: the valve allows flow from 1 to 2.
COIL POWERED: the valve in closed position blocks the flow from 1 to 2.

GENERAL DATA

Weight without coil: 0,26 Kg (0,58 lbs).
Ambient temperature range: -30 °C a 60 °C with standard seals (NBR).
Max. proof pressure: 420 bar (6.090 psi).
Flow Max: 110 l/min (29 gpm).
Cartridge materials: high strength steel, internal parts hardened and grinding.

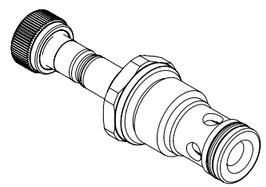

Drawing

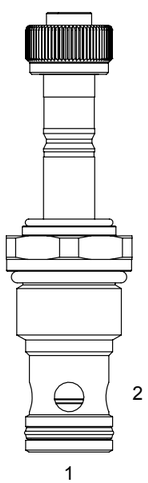

Hydraulic symbol

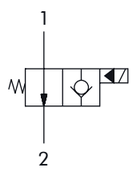

Pressure drop

Oil viscosity: 46 cSt (217 SSU) Fluid temperature: 40 °C

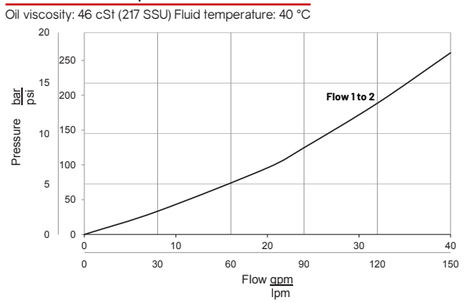

TECHNICAL DATA

HYDRAULIC

Max. working pressure:	350 bar (5.075 psi)
Flow rate:	min 5 l/min (1,3 gpm) max 110 l/min (29 gpm)
Fluid: *Viscosity:*	Mineral based oil From 15cSt to 250 cSt
Leakage:	0,25 cc/min (5 drops/min) P max. 350 bar (5.075 psi)
Standard seals:	O-ring NBR Seals Polyurethane
Cavity:	SCN1220
Installation torque:	60 Nm
Coil nut torque:	2 Nm
Max contamination level:	NAS 8 ISO 4406 19/17/14
Fluid temperature range:	From -20 to +80 °C
Fatigue cycle life:	1.000.000 cycle at 350 bar
Seal kit std.:	5AG0028

ELECTRIC

Type of voltage:	DC
Insulation index:	H
Nominal voltage:	+/- 10 %
Power at 20 °C:	20,5 W
ED:*	100% with ambient temperature range -20 °C +40 °C
Coil code: *(see page 9.01.002)*	S130-20S

**Note:* For temperature or special conditions contact our sales department.

E12N-25

Inches
Millimeters

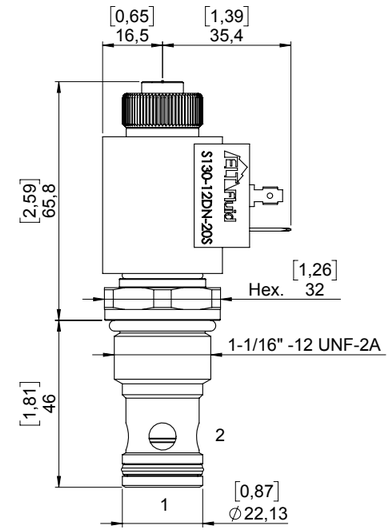

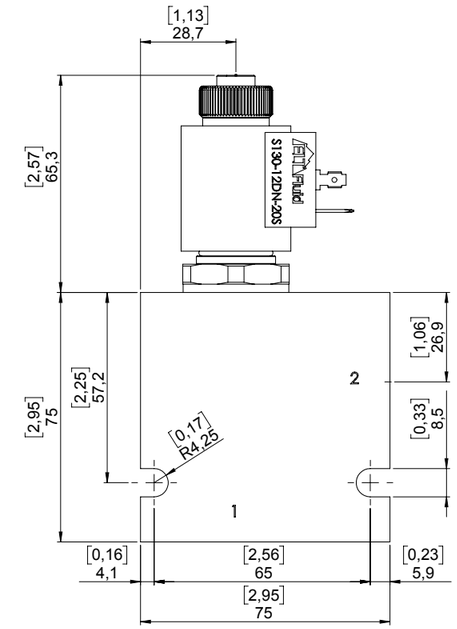

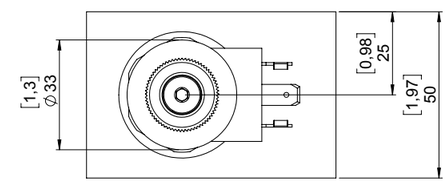

STANDARD HOUSING

Ordering code:	See page 9.04.001
Material:*	Aluminium/Steel Max working pressure for aluminum body: 210 bar Max working pressure for steel body: 350 bar

**Note:* To correctly select the material, in relation to application, see page S.003.

Ordering code

E12N-25 - -

Seals
- None (std. NBR)
- **Y**- Polyurethane
- For other options contact Sales dept.

*Options**
- None (std. without override)
- **P**- Push
- **PT**- Push and twist
- **SV**- Screw in

Connector
- **DN**- Din
- **DU**- Deutsch
- **AM**- Amp Junior

Voltage
- None (std. without coil)
- **12**- Vdc
- **24**- Vdc

Material std. housing
- **A**- Aluminium
- **S**- Steel

Housing size ports
- None (std. only cartridge)
- **4B**- 1/2" BSP
- **5B**- 3/4" BSP
- **4S**- SAE 10
- **5S**- SAE 12

**Note:* Information about manual override is available at page S.001

E12N-26

Solenoid valve 2 ways 2 positions, poppet pilot operated, normally closed

Description

Electric cartridge valve on/off designed to hold the load or block flow at high pressure application where low leakage is requested.

Operation mode

COIL NOT POWERED: the valve in closed position blocks the flow from 1 to 2.
COIL POWERED: the valve allows flow in both directions.
From 1 to 2 and from 2 to 1.

GENERAL DATA

Weight without coil: 0,26 Kg (0,58 lbs).
Ambient temperature range: -30 °C a 60 °C with standard seals (NBR).
Max. proof pressure: 420 bar (6.090 psi).
Flow Max: 110 l/min (29 gpm).
Cartridge materials: high strength steel, internal parts hardened and grinding.

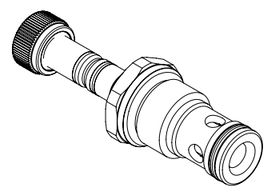

Drawing

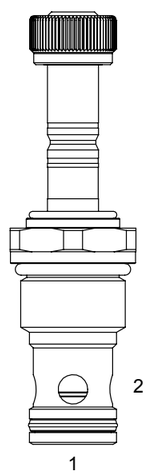

Hydraulic symbol

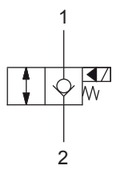

Pressure drop

Oil viscosity: 46 cSt (217 SSU) Fluid temperature: 40 °C

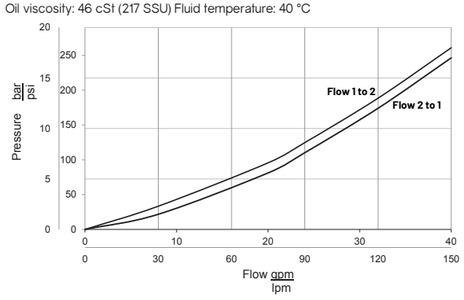

TECHNICAL DATA

HYDRAULIC	
Max. working pressure:	350 bar (5.075 psi)
Flow rate:	min 5 l/min (1,3 gpm) max 110 l/min (29 gpm)
Fluid: *Viscosity:*	Mineral based oil From 15cSt to 250 cSt
Leakage:	0,25 cc/min (5 drops/min) P max. 350 bar (5.075 psi)
Standard seals:	O-ring NBR Seals Polyurethane
Cavity:	SCN1220
Installation torque:	60 Nm
Coil nut torque:	2 Nm
Max contamination level:	NAS 8 ISO 4406 19/17/14
Fluid temperature range:	From -20 to +80 °C
Fatigue cycle life:	1.000.000 cycle at 350 bar
Seal kit std.:	5AG0028
ELECTRIC	
Type of voltage:	DC
Insulation index:	H
Nominal voltage:	+/- 10 %
Power at 20 °C:	20,5 W
ED:*	100% with ambient temperature range -20 °C +40 °C
Coil code: *(see page 9.01.002)*	S130-20S

**Note:* For temperature or special conditions contact our sales department.

E12N-26

Inches
Millimeters

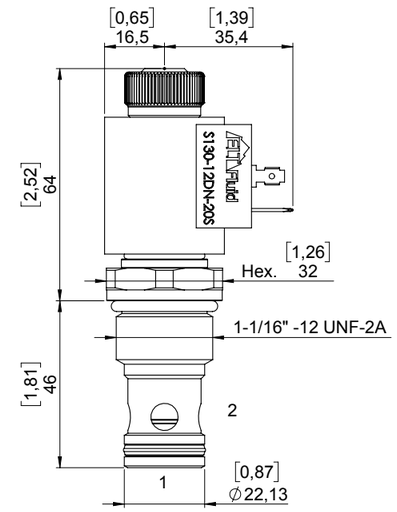

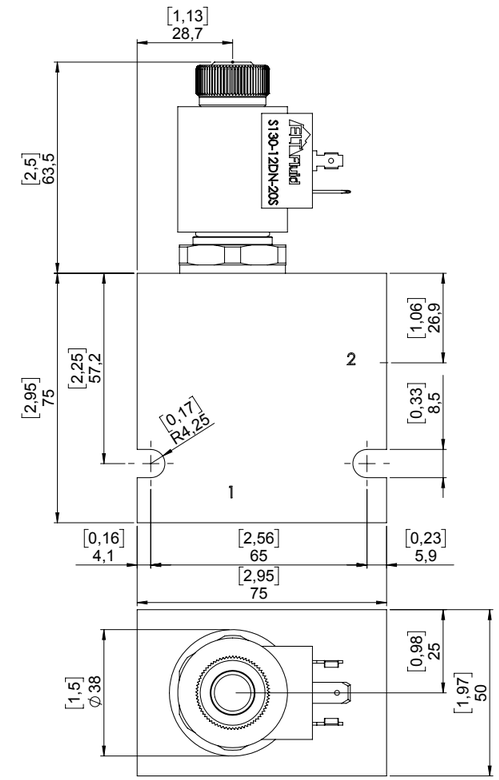

STANDARD HOUSING

Ordering code:	See page 9.04.001
Material:*	Aluminium/Steel Max working pressure for aluminum body: 210 bar Max working pressure for steel body: 350 bar

**Note:* To correctly select the material, in relation to application, see page S.003.

Ordering code

E12N-26 - -

Seals
- None (std. NBR)
- **Y**- Polyurethane
- For other options contact Sales dept.

*Options**
- None (std. without override)
- **S**- Screw out

Connector
- **DN**- Din
- **DU**- Deutsch
- **AM**- Amp Junior

Voltage
- None (std. without coil)
- **12**- Vdc
- **24**- Vdc

Material std. housing
- **A**- Aluminium
- **S**- Steel

Housing size ports
- None (std. only cartridge)
- **4B**- 1/2" BSP
- **5B**- 3/4" BSP
- **4S**- SAE 10
- **5S**- SAE 12

**Note:* Information about manual override is available at page S.001

E12N-27

Solenoid valve 2 ways 2 positions, poppet pilot operated, normally open

Description

Electric cartridge valve on/off designed to hold the load or block flow at high pressure application where low leakage is requested.

Operation mode

COIL NOT POWERED: when is not energized the coil, the valve allow flow in both directions. From 1 to 2 and 2 to 1.
COIL POWERED: when is energized the coil, this valve block flow from 1 to 2 causing close position.

GENERAL DATA

Weight without coil: 0,26 Kg (0,58 lbs).
Ambient temperature range: -30 °C a 60 °C with standard seals (NBR).
Max. proof pressure: 420 bar (6.090 psi).
Flow Max: 110 l/min (29 gpm).
Cartridge materials: high strength steel, internal parts hardened and grinding.

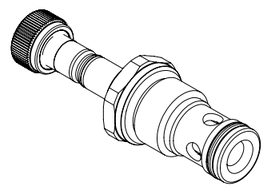

Drawing

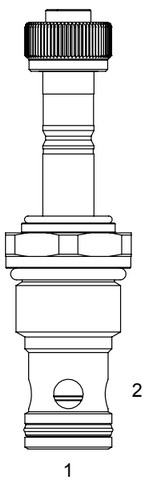

Hydraulic symbol

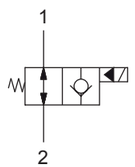

Pressure drop

Oil viscosity: 46 cSt (217 SSU) Fluid temperature: 40 °C

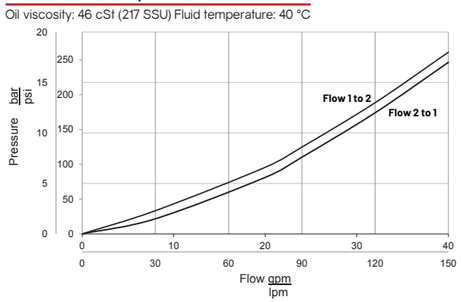

TECHNICAL DATA

HYDRAULIC

Max. working pressure:	350 bar (5.075 psi)
Flow rate:	min 5 l/min (1,3 gpm) max 110 l/min (29 gpm)
Fluid: *Viscosity:*	Mineral based oil From 15cSt to 250 cSt
Leakage:	0,25 cc/min (5 drops/min) P max. 350 bar (5.075 psi)
Standard seals:	O-ring NBR Seals Polyurethane
Cavity:	SCN1220
Installation torque:	60 Nm
Coil nut torque:	2 Nm
Max contamination level:	NAS 8 ISO 4406 19/17/14
Fluid temperature range:	From -20 to +80 °C
Fatigue cycle life:	1.000.000 cycle at 350 bar
Seal kit std.:	5AG0028

ELECTRIC

Type of voltage:	DC
Insulation index:	H
Nominal voltage:	+/- 10 %
Power at 20 °C:	20,5 W
ED:*	100% with ambient temperature range -20 °C +40 °C
Coil code: *(see page 9.01.002)*	S130-20S

**Note:* For temperature or special conditions contact our sales department.

E12N-27

Inches
Millimeters

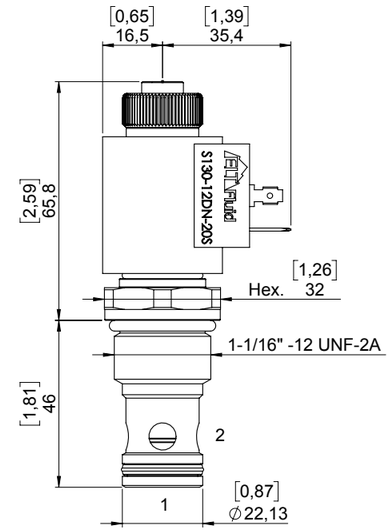

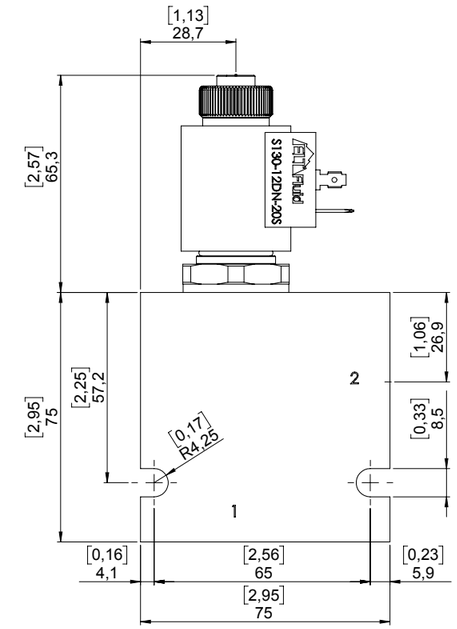

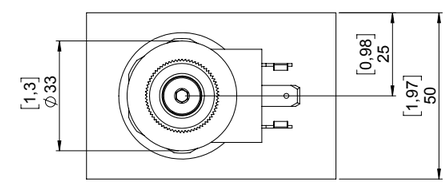

STANDARD HOUSING

Ordering code:	See page 9.04.001
Material:*	Aluminium/Steel Max working pressure for aluminum body: 210 bar Max working pressure for steel body: 350 bar

**Note:* To correctly select the material, in relation to application, see page S.003.

Ordering code

E12N-27 - -

Seals
- None (std. NBR)
- **Y**- Polyurethane
- For other options contact Sales dept.

*Options**
- None (std. without override)
- **P**- Push
- **PT**- Push and twist
- **SV**- Screw in

Connector
- **DN**- Din
- **DU**- Deutsch
- **AM**- Amp Junior

Voltage
- None (std. without coil)
- **12**- Vdc
- **24**- Vdc

Material std. housing
- **A**- Aluminium
- **S**- Steel

Housing size ports
- None (std. only cartridge)
- **4B**- 1/2" BSP
- **5B**- 3/4" BSP
- **4S**- SAE 10
- **5S**- SAE 12

**Note:* Information about manual override is available at page S.001

E12N-28

Solenoid valve 2 ways 2 positions, poppet pilot operated, normally closed

Description

Electric cartridge valve on/off designed to hold the load or block flow at high pressure application, where low leakage is requested.

Operation mode

COIL NOT POWERED: the valve in closed position blocks flow in both direction. From 2 to 1 and 1 to 2.
COIL POWERED: the valve allows flow in both directions.
From 2 to 1 and from 1 to 2.

GENERAL DATA

Weight without coil: 0,26 Kg (0,58 lbs).
Ambient temperature range: -30 °C a 60 °C with standard seals (NBR).
Max. proof pressure: 420 bar (6.090 psi).
Flow Max: 110 l/min (29 gpm).
Cartridge materials: high strength steel, internal parts hardened and grinding.

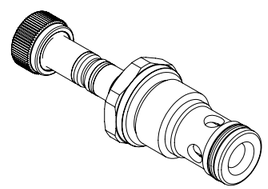

Drawing

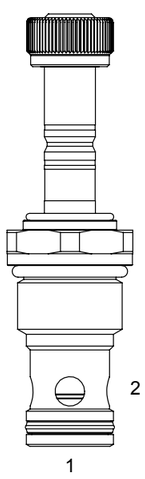

Hydraulic symbol

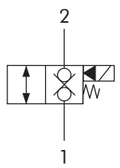

Pressure drop

Oil viscosity: 46 cSt (217 SSU) Fluid temperature: 40 °C

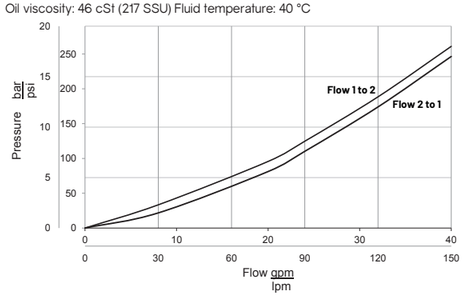

TECHNICAL DATA

HYDRAULIC	
Max. working pressure:	350 bar (5.075 psi)
Flow rate:	min 5 l/min (1,3 gpm) max 110 l/min (29 gpm)
Fluid: *Viscosity:*	Mineral based oil From 15cSt to 250 cSt
Leakage:	0,5 cc/min (10 drops/min) P max. 350 bar (5.075 psi)
Standard seals:	O-ring NBR Seals Polyurethane
Cavity:	SCN1220
Installation torque:	vv60 Nm
Coil nut torque:	2 Nm
Max contamination level:	NAS 8 ISO 4406 19/17/14
Fluid temperature range:	From -20 to +80 °C
Fatigue cycle life:	1.000.000 cycle at 350 bar
Seal kit std.:	5AG0028
ELECTRIC	
Type of voltage:	DC
Insulation index:	H
Nominal voltage:	+/- 10 %
Power at 20 °C:	20,5 W
ED:*	100% with ambient temperature range -20 °C +40 °C
Coil code: *(see page 9.01.002)*	S130-20S

Note: For temperature or special conditions contact our sales department.

E12N-28

Inches
Millimeters

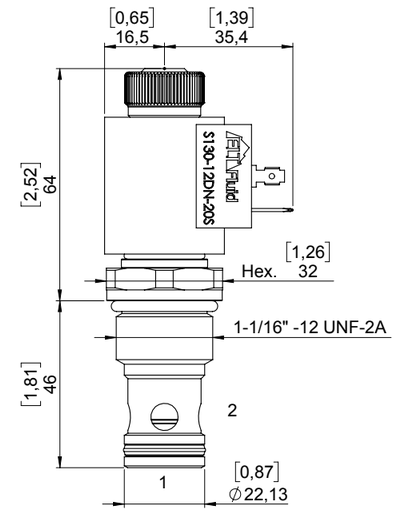

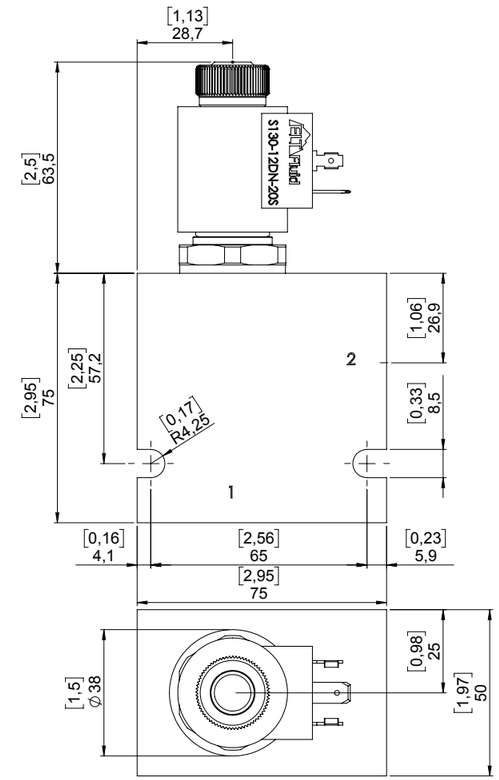

STANDARD HOUSING

Ordering code:	See page 9.04.001
Material:*	Aluminium/Steel Max working pressure for aluminum body: 210 bar Max working pressure for steel body: 350 bar

Note: To correctly select the material, in relation to application, see page S.003.

Ordering code

E12N-28 - -

Seals
- None (std. NBR+Polyurethane)
- **Y**- Polyurethane
- For other options contact Sales dept.

*Options**
- None (std. without override)
- **S**- Screw out

Connector
- **DN**- Din
- **DU**- Deutsch
- **AM**- Amp Junior

Voltage
- None (std. without coil)
- **12**- Vdc
- **24**- Vdc

Material std. housing
- **A**- Aluminium
- **S**- Steel

Housing size ports
- None (std. only cartridge)
- **4B**- 1/2" BSP
- **5B**- 3/4" BSP
- **4S**- SAE 10
- **5S**- SAE 12

Note: Information about manual override is available at page S.001

E12N-29

Solenoid valve 2 ways 2 positions, poppet pilot operated, normally open

Description

Electric cartridge valve on/off designed to hold the load or block flow at high pressure application, where low leakage is requested.

Operation mode

COIL NOT POWERED: the valve allows flow in both directions. From 1 to 2 and from 2 to 1.
COIL POWERED: the valve in closed position blocks flow in both direction. From 2 to 1 and 1 to 2.

GENERAL DATA

Weight without coil: 0,26 Kg (0,58 lbs).
Ambient temperature range: -30 °C a 60 °C with standard seals (NBR).
Max. proof pressure: 420 bar (6.090 psi).
Flow Max: 110 l/min (29 gpm).
Cartridge materials: high strength steel, internal parts hardened and grinding.

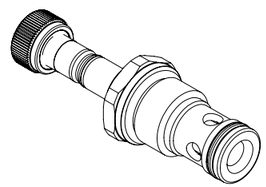

Drawing

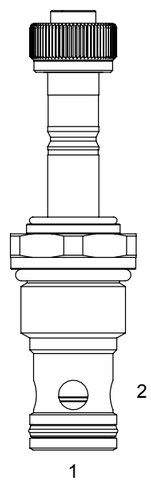

Hydraulic symbol

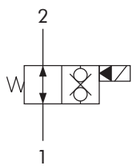

Pressure drop

Oil viscosity: 46 cSt (217 SSU) Fluid temperature: 40 °C

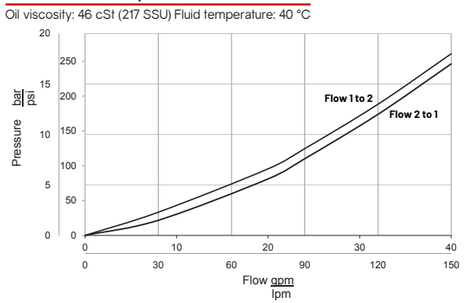

TECHNICAL DATA

HYDRAULIC

Max. working pressure:	350 bar (5.075 psi)
Flow rate:	min 5 l/min (1,3 gpm) max 110 l/min (29 gpm)
Fluid: *Viscosity:*	Mineral based oil From 15cSt to 250 cSt
Leakage:	0,5 cc/min (10 drops/min) P max. 350 bar (5.075 psi)
Standard seals:	O-ring NBR Seals Polyurethane
Cavity:	SCN1220
Installation torque:	60 Nm
Coil nut torque:	2 Nm
Max contamination level:	NAS 8 ISO 4406 19/17/14
Fluid temperature range:	From -20 to +80 °C
Fatigue cycle life:	1.000.000 cycle at 350 bar
Seal kit std.:	5AG0028

ELECTRIC

Type of voltage:	DC
Insulation index:	H
Nominal voltage:	+/- 10 %
Power at 20 °C:	20,5 W
ED:*	100% with ambient temperature range -20 °C +40 °C
Coil code: *(see page 9.01.002)*	S130-20S

**Note:* For temperature or special conditions contact our sales department.

E12N-29

Inches
Millimeters

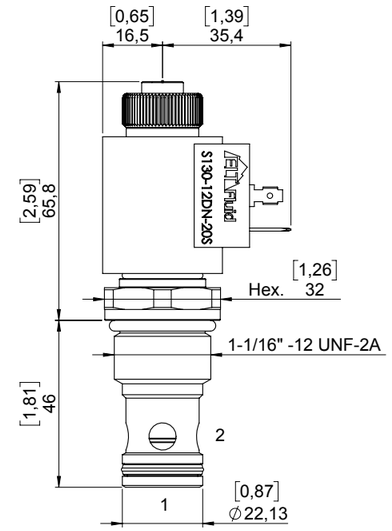

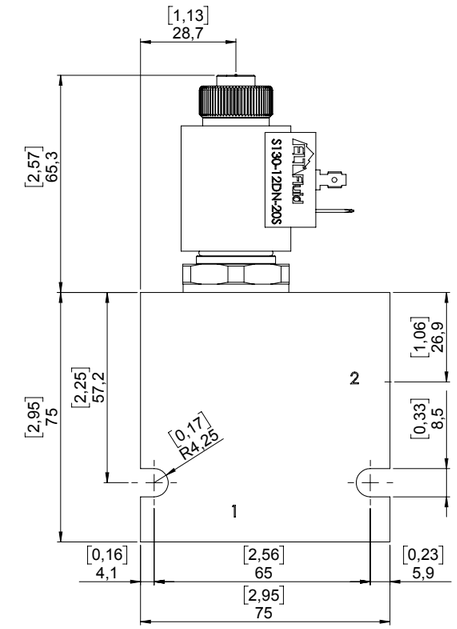

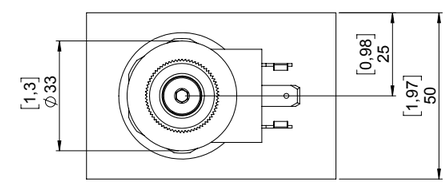

STANDARD HOUSING

Ordering code:	See page 9.04.001
Material:*	Aluminium/Steel Max working pressure for aluminum body: 210 bar Max working pressure for steel body: 350 bar

**Note:* To correctly select the material, in relation to application, see page S.003.

Ordering code

E12N-29 - -

Seals
- None (std. NBR+Polyurethane)
- **Y**- Polyurethane
- For other options contact Sales dept.

*Options**
- None (std. without override)
- **P**- Push
- **PT**- Push and twist
- **SV**- Screw in

Connector
- **DN**- Din
- **DU**- Deutsch
- **AM**- Amp Junior

Voltage
- None (std. without coil)
- **12**- Vdc
- **24**- Vdc

Material std. housing
- **A**- Aluminium
- **S**- Steel

Housing size ports
- None (std. only cartridge)
- **4B**- 1/2" BSP
- **5B**- 3/4" BSP
- **4S**- SAE 10
- **5S**- SAE 12

**Note:* Information about manual override is available at page S.001

E16N-22

Solenoid valve 2 ways 2 positions, poppet pilot opereated, normally closed

Description

Electric cartridge valve on/off designed to hold the load or block flow at high pressure application, where low leakage is requested.

Operation mode

COIL NOT POWERED: the valve in closed position blocks the flow from 2 to 1.
COIL POWERED: the valve allows flow in both directions.
From 2 to 1 and from 1 to 2.

GENERAL DATA

Weight without coil: 0,44 Kg (0,97 lbs).
Ambient temperature range: -30 °C a 60 °C with standard seals (NBR).
Max. proof pressure: 420 bar (6.090 psi).
Flow Max: 160 l/min (42 gpm).
Cartridge materials: high strength steel, internal parts hardened and grinding.

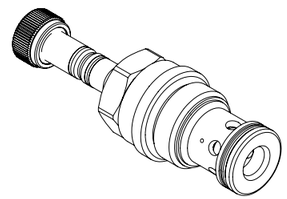

Drawing

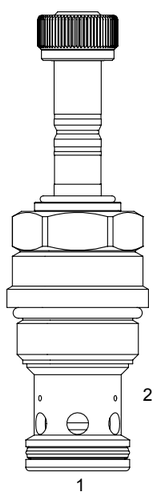

Hydraulic symbol

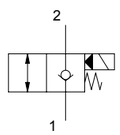

Pressure drop

Oil viscosity: 46 cSt (217 SSU) Fluid temperature: 40 °C

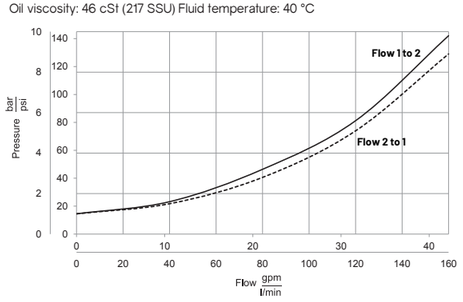

TECHNICAL DATA

HYDRAULIC	
Max. working pressure:	350 bar (5.075 psi)
Flow rate:	min 5 l/min (1,3 gpm) max 160 l/min (42 gpm)
Fluid: *Viscosity:*	Mineral based oil From 15cSt to 250 cSt
Leakage:	0,50 cc/min (10 drops/min) P max. 350 bar (5.075 psi)
Standard seals:	O-ring NBR Seals Poliurethane
Cavity:	SCN1620
Installation torque:	80 Nm
Coil nut torque:	2 Nm
Max contamination level:	NAS 8 ISO 4406 19/17/14
Fluid temperature range:	From -20 to +80 °C
Fatigue cycle life:	1.000.000 cycle at 350 bar
Seal kit std.:	5AG0029
ELECTRIC	
Type of voltage:	DC
Insulation index:	H
Nominal voltage:	+/- 10 %
Power at 20 °C:	20,5 W
ED:*	100% with ambient temperature range -20 °C +40 °C
Coil code: *(see page 9.01.002)*	S130-20S

Note: For temperature or special conditions contact our sales department.

Inches
Millimeters

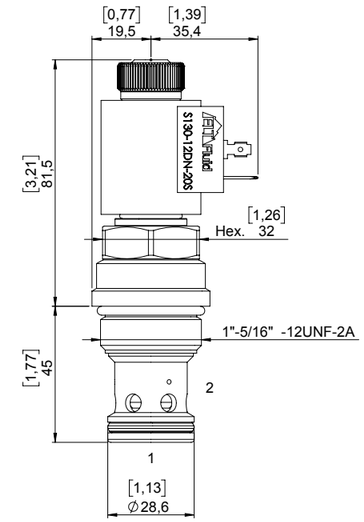

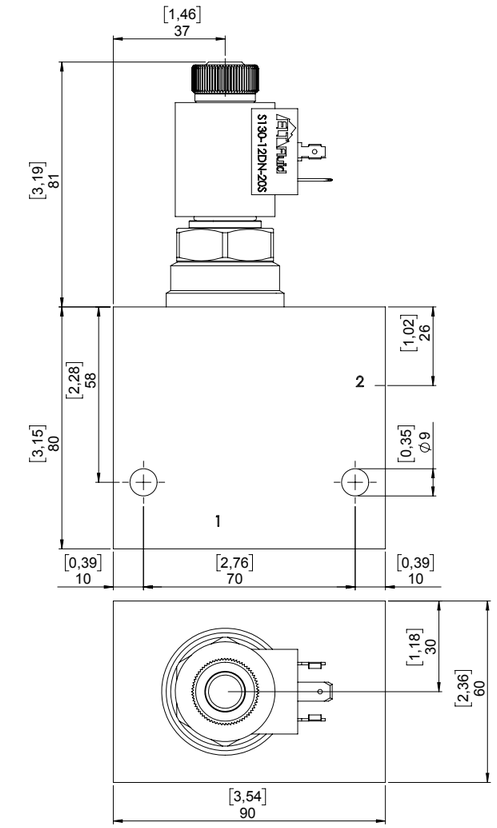

STANDARD HOUSING

Ordering code:	See page 9.05.001
Material:*	Aluminium/Steel Max working pressure for aluminum body: 210 bar Max working pressure for steel body: 350 bar

Note: To correctly select the material, in relation to application, see page S.003.

Ordering code

E16N-22 - -

Seals
- None (std. NBR+Polyurethane)
- **Y**- Polyurethane
- For other options contact Sales dept.

Options*
- None (std. without override)
- **S**- Screw Out

Connector
- **DN**- Din
- **DU**- Deutsch
- **AM**- Amp Junior

Voltage
- None (std. without coil)
- **12**- Vdc
- **24**- Vdc

Material std. housing
- **A**- Aluminium
- **S**- Steel

Housing size ports
- None (std. only cartridge)
- **6B**- 1" BSP
- **6S**- SAE 16

Note: Information about manual override is available at page S.001

E16N-23

Solenoid valve 2 ways 2 positions, poppet pilot opereated, normally open

Description

Electric cartridge valve on/off designed to hold the load or block flow at high pressure application, where low leakage is requested.

Operation mode

COIL NOT POWERED: the valve allows flow in both directions.
From 2 to 1 and from 1 to 2.
COIL POWERED: the valve in closed position blocks the flow from 2 to 1.

GENERAL DATA

Weight without coil: 0,44 Kg (0,97 lbs).
Ambient temperature range: -30 °C a 60 °C with standard seals (NBR).
Max. proof pressure: 420 bar (6.090 psi).
Flow Max: 160 l/min (42 gpm).
Cartridge materials: high strength steel, internal parts hardened and grinding.

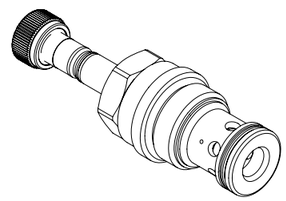

Drawing

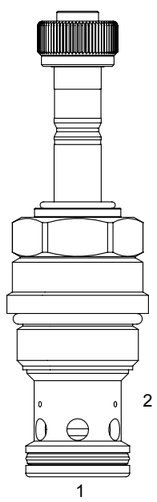

Hydraulic symbol

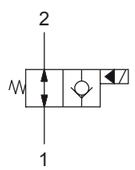

Pressure drop

Oil viscosity: 46 cSt (217 SSU) Fluid temperature: 40 °C

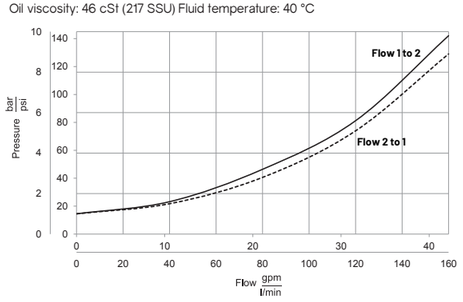

TECHNICAL DATA

HYDRAULIC	
Max. working pressure:	350 bar (5.075 psi)
Flow rate:	min 5 l/min (1,3 gpm) max 160 l/min (42 gpm)
Fluid: *Viscosity:*	Mineral based oil From 15cSt to 250 cSt
Leakage:	0,50 cc/min (10 drops/min) P max. 350 bar (5.075 psi)
Standard seals:	O-ring NBR Seals Poliurethane
Cavity:	SCN1620
Installation torque:	80 Nm
Coil nut torque:	2 Nm
Max contamination level:	NAS 8 ISO 4406 19/17/14
Fluid temperature range:	From -20 to +80 °C
Fatigue cycle life:	1.000.000 cycle at 350 bar
Seal kit std.:	5AG0029
ELECTRIC	
Type of voltage:	DC
Insulation index:	H
Nominal voltage:	+/- 10 %
Power at 20 °C:	20,5 W
ED:*	100% with ambient temperature range -20 °C +40 °C
Coil code: *(see page 9.01.002)*	S130-20S

**Note:* For temperature or special conditions contact our sales department.

E16N-23

Inches
Millimeters

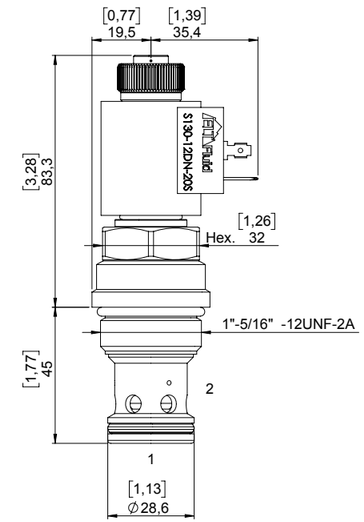

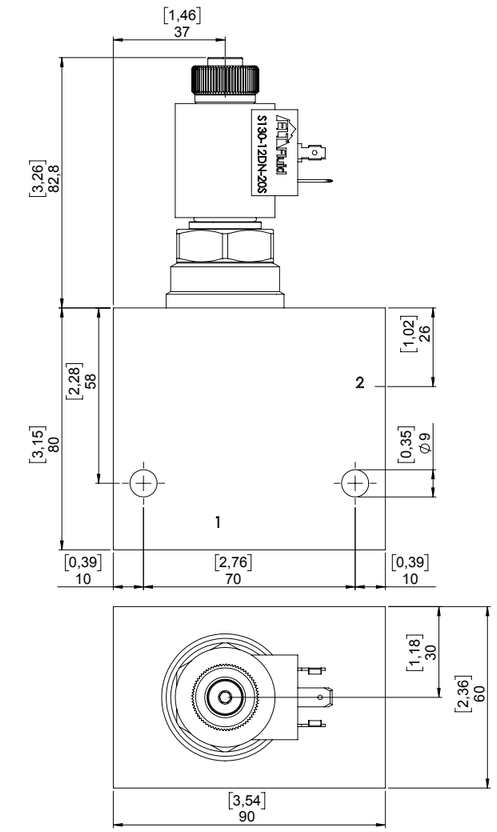

STANDARD HOUSING

Ordering code:	See page 9.05.001
Material:*	Aluminium/Steel Max working pressure for aluminum body: 210 bar Max working pressure for steel body: 350 bar

**Note:* To correctly select the material, in relation to application, see page S.003.

Ordering code

E16N-23 - -

Seals
- None (std. NBR+Polyurethane)
- **Y**- Polyurethane
- For other options contact Sales dept.

*Options**
- None (std. without override)
- **P**- Push
- **PT**- Push and twist
- **SV**- Screw in

Connector
- **DN**- Din
- **DU**- Deutsch
- **AM**- Amp Junior

Voltage
- None (std. without coil)
- **12**- Vdc
- **24**- Vdc

Material std. housing
- **A**- Aluminium
- **S**- Steel

Housing size ports
- None (std. only cartridge)
- **6B**- 1" BSP
- **6S**- SAE 16

**Note:* Information about manual override is available at page S.001

E16N-28

Solenoid valve 2 ways 2 positions, poppet pilot opereated, normally closed

Description

Electric cartridge valve on/off designed to hold the load or block flow at high pressure application, where low leakage is requested.

Operation mode

COIL NOT POWERED: the valve in closed position blocks flow in both direction. From 2 to 1 and 1 to 2.
COIL POWERED: the valve allows flow in both directions.
From 2 to 1 and from 1 to 2.

GENERAL DATA

Weight without coil: 0,44 Kg (0,97 lbs).
Ambient temperature range: -30 C° a 60 C° with standard seals (NBR).
Max. proof pressure: 420 bar (6.090 psi).
Flow Max: 160 l/min (42 gpm).
Cartridge materials: high strength steel, internal parts hardened and grinding.

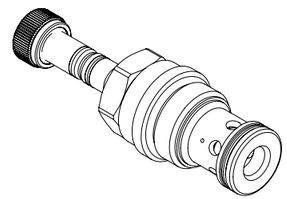

Drawing

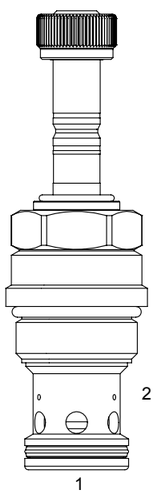

Hydraulic symbol

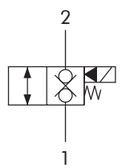

Pressure drop

Oil viscosity: 46 cSt (217 SSU) Fluid temperature: 40 °C

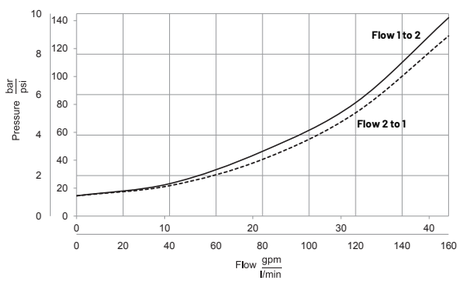

TECHNICAL DATA

HYDRAULIC	
Max. working pressure:	350 bar (5.075 psi)
Flow rate:	min 5 l/min (1,3 gpm) max 160 l/min (42 gpm)
Fluid: *Viscosity:*	Mineral based oil From 15cSt to 250 cSt
Leakage:	0,50 cc/min (10 drops/min) P max. 350 bar (5.075 psi)
Standard seals:	O-ring NBR Seals Poliurethane
Cavity:	SCN1620
Installation torque:	80 Nm
Coil nut torque:	2 Nm
Max contamination level:	NAS 8 ISO 4406 19/17/14
Fluid temperature range:	From -20 to +80 °C
Fatigue cycle life:	1.000.000 cycle at 350 bar
Seal kit std.:	5AG0029
ELECTRIC	
Type of voltage:	DC
Insulation index:	H
Nominal voltage:	+/- 10 %
Power at 20 °C:	20,5 W
ED:*	100% with ambient temperature range -20 °C +40 °C
Coil code: *(see page 9.01.002)*	S130-20S

**Note:* For temperature or special conditions contact our sales department.

E16N-28

Inches
Millimeters

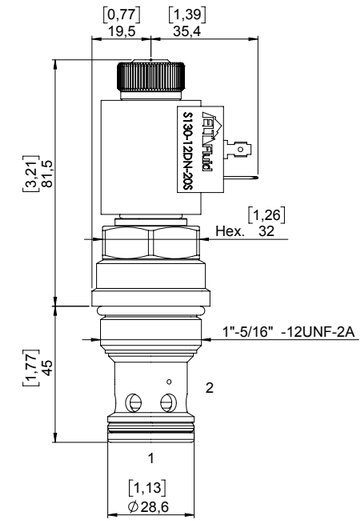

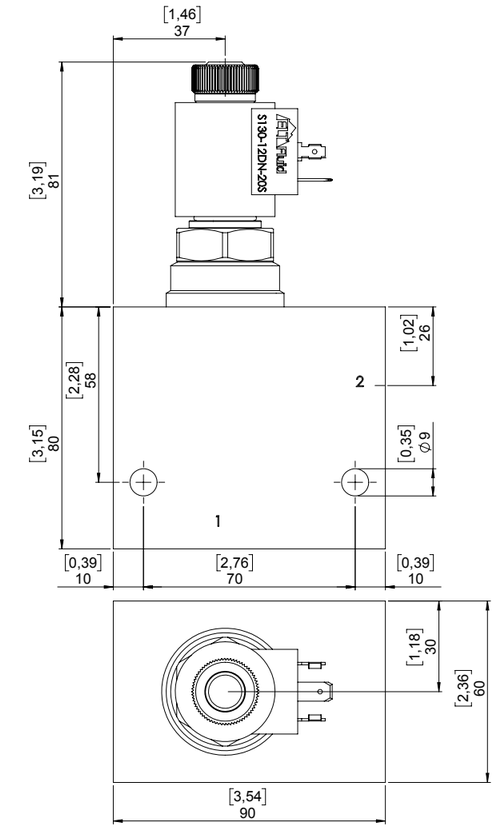

STANDARD HOUSING

Ordering code:	See page 9.05.001
Material:*	Aluminium/Steel Max working pressure for aluminum body: 210 bar Max working pressure for steel body: 350 bar

**Note:* To correctly select the material, in relation to application, see page S.003.

Ordering code

E16N-28 - -

Seals
- None (std. NBR+Polyurethane)
- **Y**- Polyurethane
- For other options contact Sales dept.

*Options**
- None (std. without override)
- **S**- Screw Out

Connector
- **DN**- Din
- **DU**- Deutsch
- **AM**- Amp Junior

Voltage
- None (std. without coil)
- **12**- Vdc
- **24**- Vdc

Material std. housing
- **A**- Aluminium
- **S**- Steel

Housing size ports
- None (std. only cartridge)
- **6B**- 1" BSP
- **6S**- SAE 16

**Note:* Information about manual override is available at page S.001

E16N-29

Solenoid valve 2 ways 2 positions, poppet pilot opereated, normally open

Description

Cartridge valve on/off electric valve designed to hold the load or block flow in application where low leakage is requested at high pressure.

Operation mode

COIL NOT POWERED: when is not energized the coil, the valve allow flow in both directions. From 2 to 1 and 1 to 2.
COIL POWERED: when is energized the coil, this valve block flow in both directions. From 2 to 1 and 1 to 2 causing close position.

GENERAL DATA

Weight without coil: 0,44 Kg (0,97 lbs).
Ambient temperature range: -30 °C a 60 °C with standard seals (NBR).
Max. proof pressure: 420 bar (6.090 psi).
Flow Max: 160 l/min (42 gpm).
Cartridge materials: high strength steel, internal parts hardened and grinding.

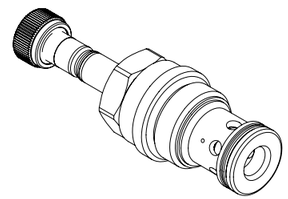

Drawing

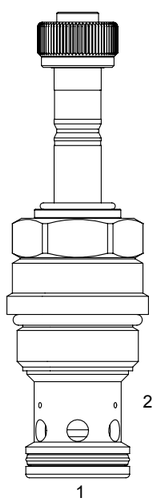

Hydraulic symbol

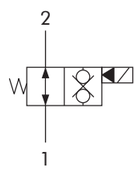

Pressure drop

Oil viscosity: 46 cSt (217 SSU) Fluid temperature: 40 °C

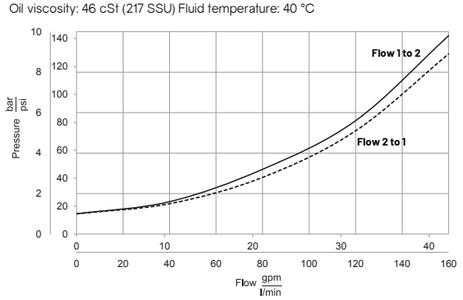

TECHNICAL DATA

HYDRAULIC	
Max. working pressure:	350 bar (5.075 psi)
Flow rate:	min 5 l/min (1,3 gpm) max 160 l/min (42 gpm)
Fluid: *Viscosity:*	Mineral based oil From 15cSt to 250 cSt
Leakage:	0,50 cc/min (10 drops/min) P max. 350 bar (5.075 psi)
Standard seals:	O-ring NBR Seals Poliurethane
Cavity:	SCN1620
Installation torque:	80 Nm
Coil nut torque:	2 Nm
Max contamination level:	NAS 8 ISO 4406 19/17/14
Fluid temperature range:	From -20 to +80 °C
Fatigue cycle life:	1.000.000 cycle at 350 bar
Seal kit std.:	5AG0029
ELECTRIC	
Type of voltage:	DC
Insulation index:	H
Nominal voltage:	+/- 10 %
Power at 20 °C:	20,5 W
ED:*	100% with ambient temperature range -20 °C +40 °C
Coil code: *(see page 9.01.002)*	S130-20S

**Note:* For temperature or special conditions contact our sales department.

E16N-29

Inches
Millimeters

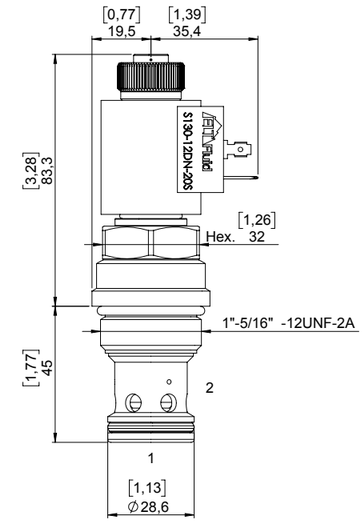

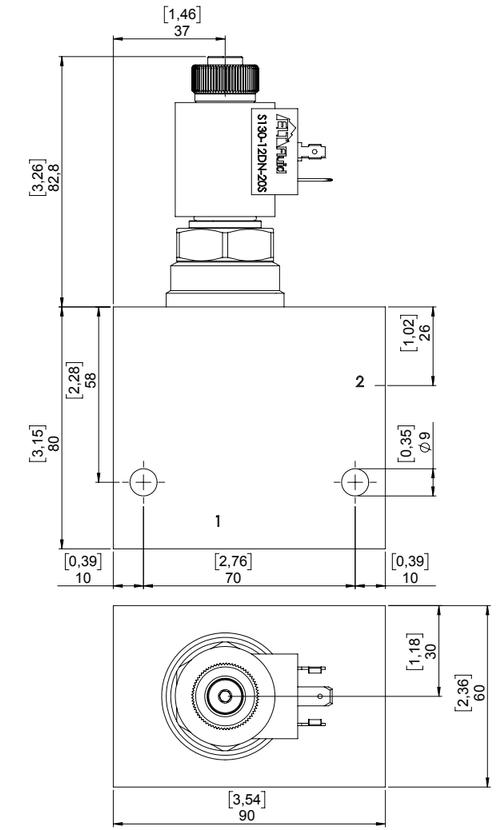

STANDARD HOUSING

Ordering code:	See page 9.05.001
Material:*	Aluminium/Steel Max working pressure for aluminum body: 210 bar Max working pressure for steel body: 350 bar

**Note:* To correctly select the material, in relation to application, see page S.003.

Ordering code

E16N-29 - -

Seals
- None (std. NBR+Polyurethane)
- **Y**- Polyurethane
- For other options contact Sales dept.

*Options**
- None (std. without override)
- **P**- Push
- **PT**- Push and twist
- **SV**- Screw in

Connector
- **DN**- Din
- **DU**- Deutsch
- **AM**- Amp Junior

Voltage
- None (std. without coil)
- **12**- Vdc
- **24**- Vdc

Material std. housing
- **A**- Aluminium
- **S**- Steel

Housing size ports
- None (std. only cartridge)
- **6B**- 1" BSP
- **6S**- SAE 16

**Note:* Information about manual override is available at page S.001

E20N-22

Solenoid valve 2 ways 2 positions, poppet pilot opereated, normally open

Description

Electric cartridge valve on/off designed to hold the load or block flow at high pressure application, where low leakage is requested.

Operation mode

COIL NOT POWERED: the valve in closed position blocks the flow from 2 to 1.
COIL POWERED: the valve allows flow in both directions. From 2 to 1 and from 1 to 2.

GENERAL DATA

Weight without coil: 0,57 Kg (1,25 lbs).
Ambient temperature range: -30 °C a 60 °C with standard seals (NBR).
Max. proof pressure: 420 bar (6.090 psi).
Flow Max: 300 l/min (79 gpm).
Cartridge materials: high strength steel, internal parts hardened and grinding.

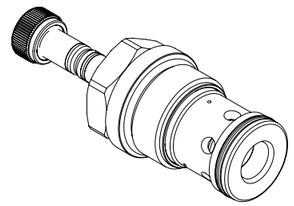

Drawing

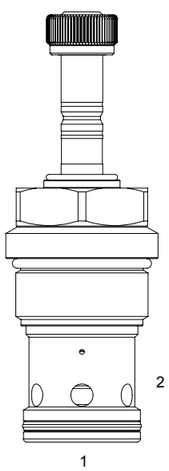

Hydraulic symbol

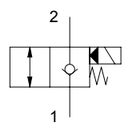

Pressure drop

Oil viscosity: 46 cSt (217 SSU) Fluid temperature: 40 °C

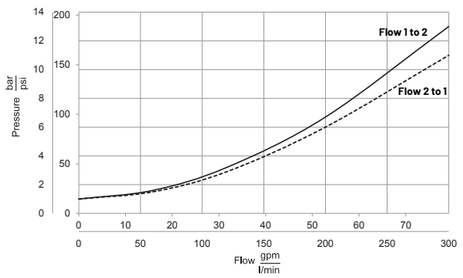

TECHNICAL DATA

HYDRAULIC

Max. working pressure:	350 bar (5.075 psi)
Flow rate:	min 5 l/min (1,3 gpm) max 300 l/min (79 gpm)
Fluid: *Viscosity:*	Mineral based oil From 15cSt to 250 cSt
Leakage:	0,50 cc/min (10 drops/min) P max. 350 bar (5.075 psi)
Standard seals:	O-ring NBR Seals Poliurethane
Cavity:	SCN2020
Installation torque:	100 Nm
Coil nut torque:	2 Nm
Max contamination level:	NAS 8 ISO 4406 19/17/14
Fluid temperature range:	From -20 to +80 °C
Fatigue cycle life:	1.000.000 cycle at 350 bar
Seal kit std.:	5AG0030

ELECTRIC

Type of voltage:	DC
Insulation index:	H
Nominal voltage:	+/- 10 %
Power at 20 °C:	20,5 W
ED:*	100% with ambient temperature range -20 °C +40 °C
Coil code: *(see page 9.01.002)*	S130-20S

**Note:* For temperature or special conditions contact our sales department.

E20N-22

Inches
Millimeters

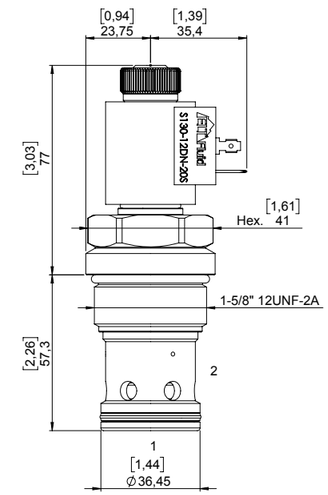

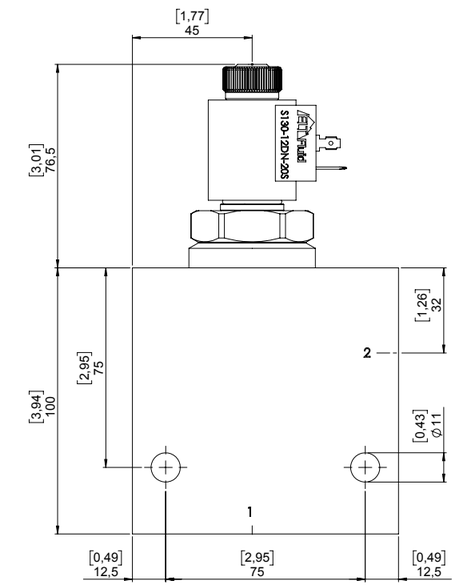

STANDARD HOUSING

Ordering code:	See page 9.05.001
Material:*	Aluminium/Steel Max working pressure for aluminum body: 210 bar Max working pressure for steel body: 350 bar

**Note:* To correctly select the material, in relation to application, see page S.003.

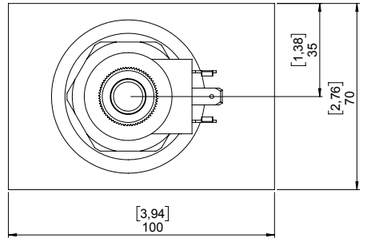

Ordering code

E20N-22 - - -

Seals
- None (std. NBR+Polyurethane)
- **Y**- Polyurethane
- For other options contact Sales dept.

*Options**
- None (std. without override)

Connector
- **DN**- Din
- **DU**- Deutsch
- **AM**- Amp Junior

Voltage
- None (std. without coil)
- **12**- Vdc
- **24**- Vdc

Material std. housing
- **A**- Aluminium
- **S**- Steel

Housing size ports
- None (std. only cartridge)
- **6B**- 1" BSP
- **6S**- SAE 16

**Note:* Information about manual override is available at page S.001

E20N-23

Solenoid valve 2 ways 2 positions, poppet pilot opereated, normally open

Description

Electric cartridge valve on/off designed to hold the load or block flow at high pressure application, where low leakage is requested.

Operation mode

COIL NOT POWERED: the valve allows flow in both directions.
From 2 to 1 and from 1 to 2.
COIL POWERED: the valve in closed position blocks the flow from 2 to 1.

GENERAL DATA

Weight without coil: 0,57 Kg (1,25 lbs).
Ambient temperature range: -30 °C a 60 °C with standard seals (NBR).
Max. proof pressure: 420 bar (6.090 psi).
Flow Max: 300 l/min (79 gpm).
Cartridge materials: high strength steel, internal parts hardened and grinding.

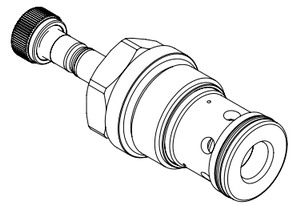

Drawing

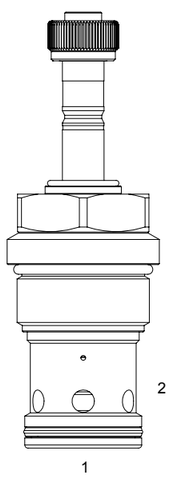

Hydraulic symbol

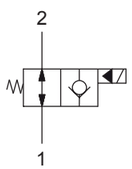

Pressure drop

Oil viscosity: 46 cSt (217 SSU) Fluid temperature: 40 °C

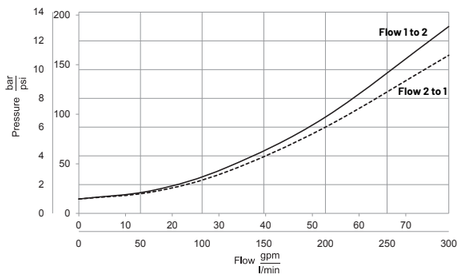

TECHNICAL DATA

HYDRAULIC

Max. working pressure:	350 bar (5.075 psi)
Flow rate:	min 5 l/min (1,3 gpm) max 300 l/min (79 gpm)
Fluid: *Viscosity:*	Mineral based oil From 15cSt to 250 cSt
Leakage:	0,50 cc/min (10 drops/min) P max. 350 bar (5.075 psi)
Standard seals:	O-ring NBR Seals Poliurethane
Cavity:	SCN2020
Installation torque:	100 Nm
Coil nut torque:	2 Nm
Max contamination level:	NAS 8 ISO 4406 19/17/14
Fluid temperature range:	From -20 to +80 °C
Fatigue cycle life:	1.000.000 cycle at 350 bar
Seal kit std.:	5AG0030

ELECTRIC

Type of voltage:	DC
Insulation index:	H
Nominal voltage:	+/- 10 %
Power at 20 °C:	20,5 W
ED:*	100% with ambient temperature range -20 °C +40 °C
Coil code: *(see page 9.01.002)*	S130-20S

Note: For temperature or special conditions contact our sales department.

E20N-23

Inches
Millimeters

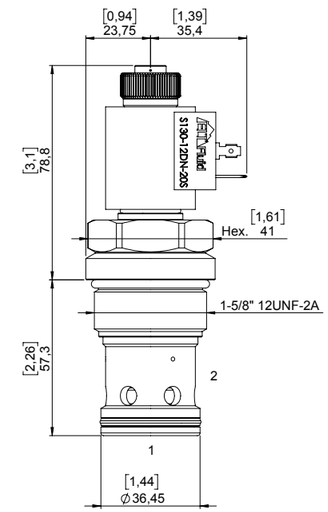

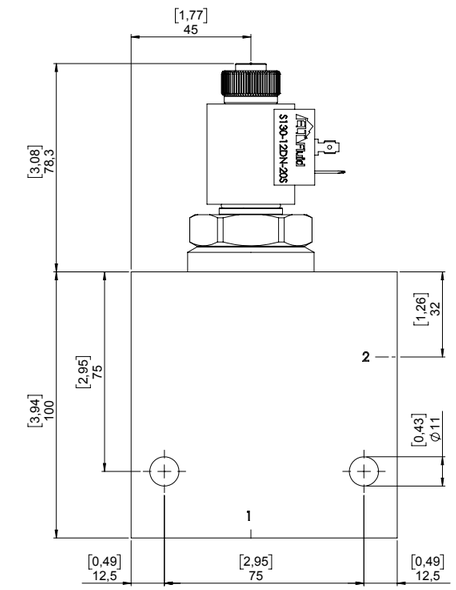

STANDARD HOUSING

Ordering code:	See page 9.05.001
Material:*	Aluminium/Steel Max working pressure for aluminum body: 210 bar Max working pressure for steel body: 350 bar

Note: To correctly select the material, in relation to application, see page S.003.

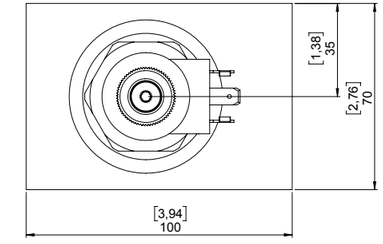

Ordering code

E20N-23 - - -

Seals
- None (std. NBR+Polyurethane)
- **Y**- Polyurethane
- For other options contact Sales dept.

*Options**
- None (std. without override)

Connector
- **DN**- Din
- **DU**- Deutsch
- **AM**- Amp Junior

Voltage
- None (std. without coil)
- **12**- Vdc
- **24**- Vdc

Material std. housing
- **A**- Aluminium
- **S**- Steel

Housing size ports
- None (std. only cartridge)
- **6B**- 1" BSP
- **6S**- SAE 16

Note: Information about manual override is available at page S.001

E20N-28

Solenoid valve 2 ways 2 positions, poppet pilot opereated, normally closed

Description

Electric cartridge valve on/off designed to hold the load or block flow at high pressure application, where low leakage is requested.

Operation mode

COIL NOT POWERED: the valve in closed position blocks flow in both direction. From 2 to 1 and 1 to 2.
COIL POWERED: the valve allows flow in both directions.
From 2 to 1 and from 1 to 2.

GENERAL DATA

Weight without coil: 0,57 Kg (1,25 lbs).
Ambient temperature range: -30 °C a 60 °C xwith standard seals (NBR).
Max. proof pressure: 420 bar (6.090 psi).
Flow Max: 300 l/min (79 gpm).
Cartridge materials: high strength steel, internal parts hardened and grinding.

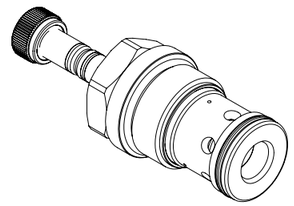

Drawing

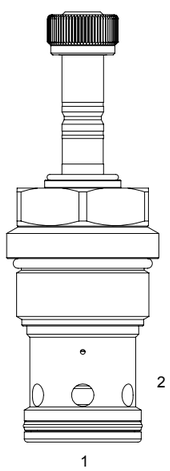

Hydraulic symbol

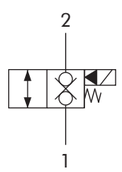

Pressure drop

Oil viscosity: 46 cSt (217 SSU) Fluid temperature: 40 °C

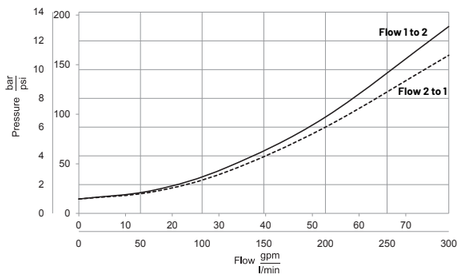

TECHNICAL DATA

HYDRAULIC	
Max. working pressure:	350 bar (5.075 psi)
Flow rate:	min 5 l/min (1,3 gpm) max 300 l/min (79 gpm)
Fluid: *Viscosity:*	Mineral based oil From 15cSt to 250 cSt
Leakage:	0,50 cc/min (10 drops/min) P max. 350 bar (5.075 psi)
Standard seals:	O-ring NBR Seals Poliurethane
Cavity:	SCN2020
Installation torque:	100 Nm
Coil nut torque:	2 Nm
Max contamination level:	NAS 8 ISO 4406 19/17/14
Fluid temperature range:	From -20 to +80 °C
Fatigue cycle life:	1.000.000 cycle at 350 bar
Seal kit std.:	5AG0030
ELECTRIC	
Type of voltage:	DC
Insulation index:	H
Nominal voltage:	+/- 10 %
Power at 20 °C:	20,5 W
ED:*	100% with ambient temperature range -20 °C +40 °Ccv
Coil code: *(see page 9.01.002)*	S130-20S

**Note:* For temperature or special conditions contact our sales department.

E20N-28

Inches
Millimeters

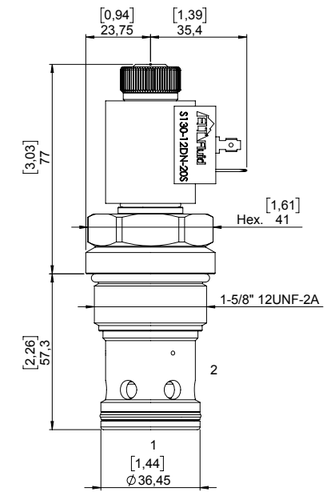

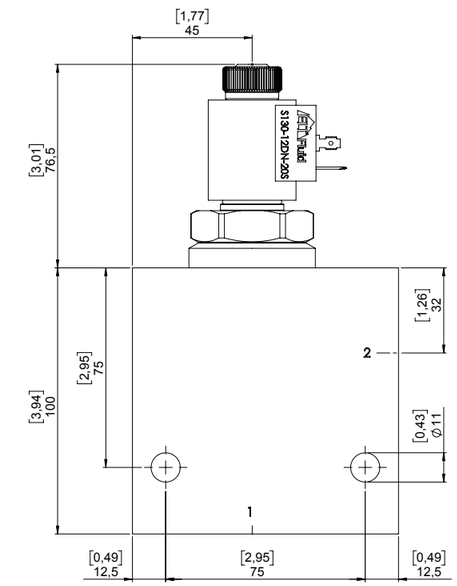

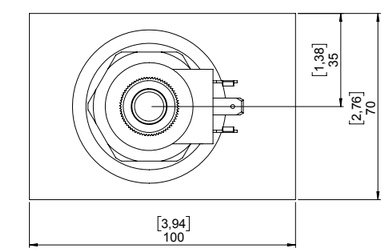

STANDARD HOUSING

Ordering code:	See page 9.05.001
Material:*	Aluminium/Steel Max working pressure for aluminum body: 210 bar Max working pressure for steel body: 350 bar

**Note:* To correctly select the material, in relation to application, see page S.003.

Ordering code

E20N-28 - - -

Seals
- None (std. NBR+Polyurethane)
- **Y**- Polyurethane
- For other options contact Sales dept.

*Options**
- None (std. without override)

Connector
- **DN**- Din
- **DU**- Deutsch
- **AM**- Amp Junior

Voltage
- None (std. without coil)
- **12**- Vdc
- **24**- Vdc

Material std. housing
- **A**- Aluminium
- **S**- Steel

Housing size ports
- None (std. only cartridge)
- **6B**- 1" BSP
- **6S**- SAE 16

**Note:* Information about manual override is available at page S.001

E20N-29

Solenoid valve 2 ways 2 positions, poppet pilot opereated, normally open

Description

Cartridge valve on/off electric valve designed to hold the load or block flow in application where low leakage is requested at high pressure.

Operation mode

COIL NOT POWERED: when is not energized the coil, the valve allow flow in both directions. From 2 to 1 and 1 to 2.
COIL POWERED: when is energized the coil, this valve block flow in both directions. From 2 to 1 and 1 to 2 causing close position.

GENERAL DATA

Weight without coil: 0,57 Kg (1,25 lbs).
Ambient temperature range: -30 °C a 60 °C with standard seals (NBR).
Max. proof pressure: 420 bar (6.090 psi).
Flow Max: 300 l/min (79 gpm).
Cartridge materials: high strength steel, internal parts hardened and grinding.

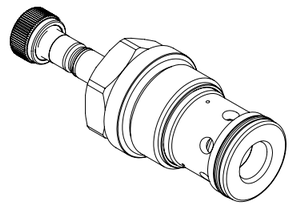

Drawing

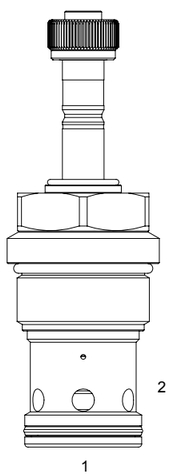

Hydraulic symbol

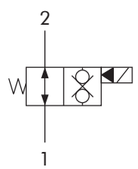

Pressure drop

Oil viscosity: 46 cSt (217 SSU) Fluid temperature: 40 °C

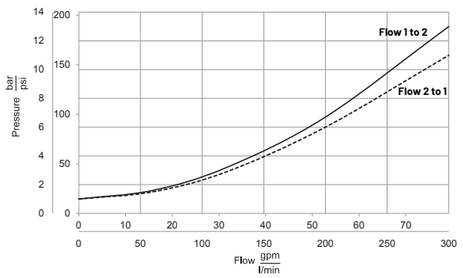

TECHNICAL DATA

HYDRAULIC	
Max. working pressure:	350 bar (5.075 psi)
Flow rate:	min 5 l/min (1,3 gpm) max 300 l/min (79 gpm)
Fluid: *Viscosity:*	Mineral based oil From 15cSt to 250 cSt
Leakage:	0,50 cc/min (10 drops/min) P max. 350 bar (5.075 psi)
Standard seals:	O-ring NBR Seals Poliurethane
Cavity:	SCN2020
Installation torque:	100 Nm
Coil nut torque:	2 Nm
Max contamination level:	NAS 8 ISO 4406 19/17/14
Fluid temperature range:	From -20 to +80 °C
Fatigue cycle life:	1.000.000 cycle at 350 bar
Seal kit std.:	5AG0030
ELECTRIC	
Type of voltage:	DC
Insulation index:	H
Nominal voltage:	+/- 10 %
Power at 20 °C:	20,5 W
ED:*	100% with ambient temperature range -20 °C +40 °C
Coil code: *(see page 9.01.002)*	S130-20S

**Note:* For temperature or special conditions contact our sales department.

E20N-29

Inches
Millimeters

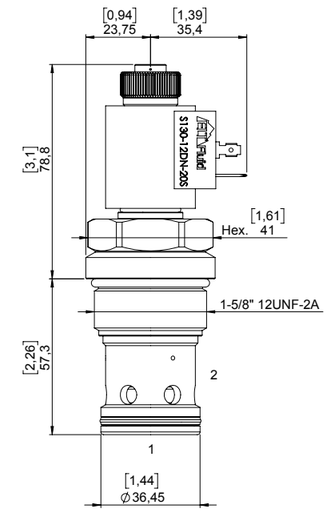

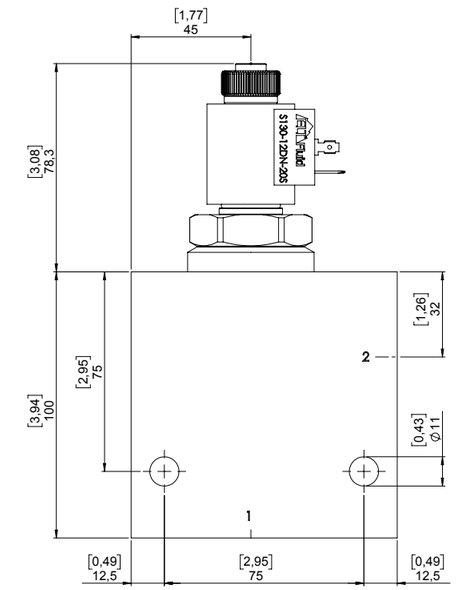

STANDARD HOUSING

Ordering code:	See page 9.05.001
Material:*	Aluminium/Steel Max working pressure for aluminum body: 210 bar Max working pressure for steel body: 350 bar

**Note:* To correctly select the material, in relation to application, see page S.003.

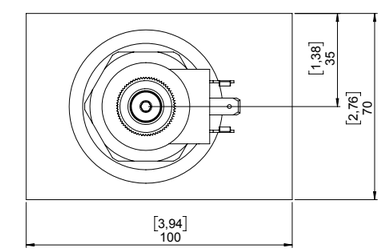

Ordering code

E20N-29 - - -

Seals
- None (std. NBR+Polyurethane)
- **Y**- Polyurethane
- For other options contact Sales dept.

*Options**
- None (std. without override)

Connector
- **DN**- Din
- **DU**- Deutsch
- **AM**- Amp Junior

Voltage
- None (std. without coil)
- **12**- Vdc
- **24**- Vdc

Material std. housing
- **A**- Aluminium
- **S**- Steel

Housing size ports
- None (std. only cartridge)
- **6B**- 1" BSP
- **6S**- SAE 16

**Note:* Information about manual override is available at page S.001

E20N-22

Solenoid valve 2 ways 2 positions, poppet pilot opereated, normally open

Description

Electric cartridge valve on/off designed to hold the load or block flow at high pressure application, where low leakage is requested.

Operation mode

COIL NOT POWERED: the valve in closed position blocks the flow from 2 to 1.
COIL POWERED: the valve allows flow in both directions. From 2 to 1 and from 1 to 2.

GENERAL DATA

Weight without coil: 0,57 Kg (1,25 lbs).
Ambient temperature range: -30 °C a 60 °C with standard seals (NBR).
Max. proof pressure: 420 bar (6.090 psi).
Flow Max: 300 l/min (79 gpm).
Cartridge materials: high strength steel, internal parts hardened and grinding.

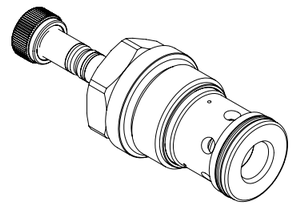

Drawing

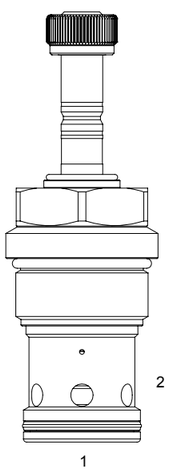

Hydraulic symbol

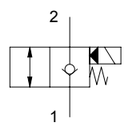

Pressure drop

Oil viscosity: 46 cSt (217 SSU) Fluid temperature: 40 °C

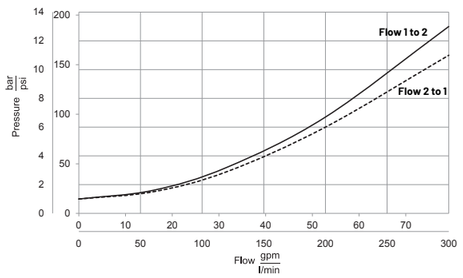

TECHNICAL DATA

HYDRAULIC

Max. working pressure:	350 bar (5.075 psi)
Flow rate:	min 5 l/min (1,3 gpm) max 300 l/min (79 gpm)
Fluid: *Viscosity:*	Mineral based oil From 15cSt to 250 cSt
Leakage:	0,50 cc/min (10 drops/min) P max. 350 bar (5.075 psi)
Standard seals:	O-ring NBR Seals Poliurethane
Cavity:	SCN2020
Installation torque:	100 Nm
Coil nut torque:	2 Nm
Max contamination level:	NAS 8 ISO 4406 19/17/14
Fluid temperature range:	From -20 to +80 °C
Fatigue cycle life:	1.000.000 cycle at 350 bar
Seal kit std.:	5AG0030

ELECTRIC

Type of voltage:	DC
Insulation index:	H
Nominal voltage:	+/- 10 %
Power at 20 °C:	20,5 W
ED:*	100% with ambient temperature range -20 °C +40 °C
Coil code: *(see page 9.01.002)*	S130-20S

**Note:* For temperature or special conditions contact our sales department.

E20N-22

Inches
Millimeters

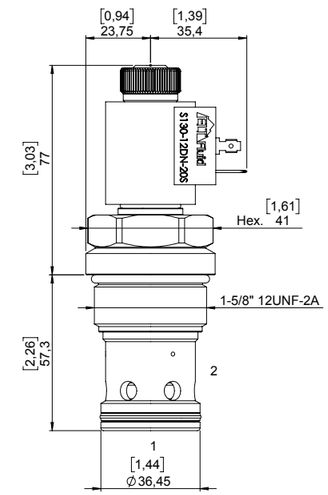

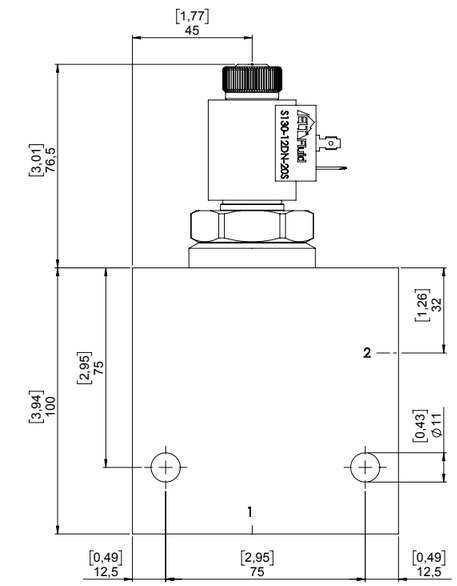

STANDARD HOUSING

Ordering code:	See page 9.05.001
Material:*	Aluminium/Steel Max working pressure for aluminum body: 210 bar Max working pressure for steel body: 350 bar

**Note:* To correctly select the material, in relation to application, see page S.003.

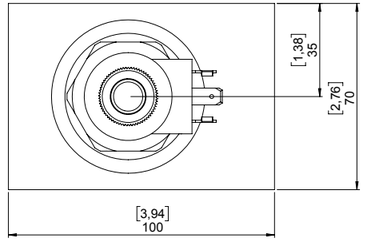

Ordering code

E20N-22 - - -

Seals
- None (std. NBR+Polyurethane)
- **Y**- Polyurethane
- For other options contact Sales dept.

*Options**
- None (std. without override)

Connector
- **DN**- Din
- **DU**- Deutsch
- **AM**- Amp Junior

Voltage
- None (std. without coil)
- **12**- Vdc
- **24**- Vdc

Material std. housing
- **A**- Aluminium
- **S**- Steel

Housing size ports
- None (std. only cartridge)
- **6B**- 1" BSP
- **6S**- SAE 16

**Note:* Information about manual override is available at page S.001

E20N-23

Solenoid valve 2 ways 2 positions, poppet pilot opereated, normally open

Description

Electric cartridge valve on/off designed to hold the load or block flow at high pressure application, where low leakage is requested.

Operation mode

COIL NOT POWERED: the valve allows flow in both directions.
From 2 to 1 and from 1 to 2.
COIL POWERED: the valve in closed position blocks the flow from 2 to 1.

GENERAL DATA

Weight without coil: 0,57 Kg (1,25 lbs).
Ambient temperature range: -30 °C a 60 °C with standard seals (NBR).
Max. proof pressure: 420 bar (6.090 psi).
Flow Max: 300 l/min (79 gpm).
Cartridge materials: high strength steel, internal parts hardened and grinding.

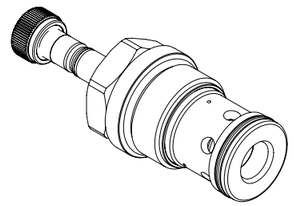

Drawing

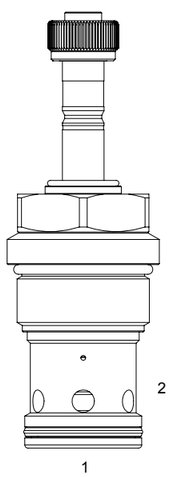

Hydraulic symbol

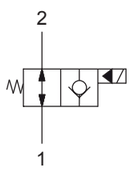

Pressure drop

Oil viscosity: 46 cSt (217 SSU) Fluid temperature: 40 °C

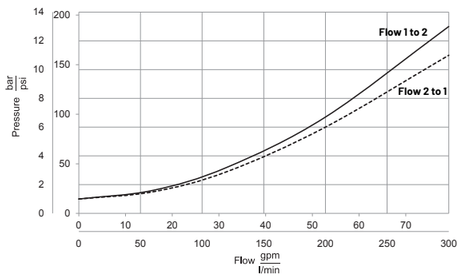

TECHNICAL DATA

HYDRAULIC

Max. working pressure:	350 bar (5.075 psi)
Flow rate:	min 5 l/min (1,3 gpm) max 300 l/min (79 gpm)
Fluid: *Viscosity:*	Mineral based oil From 15cSt to 250 cSt
Leakage:	0,50 cc/min (10 drops/min) P max. 350 bar (5.075 psi)
Standard seals:	O-ring NBR Seals Poliurethane
Cavity:	SCN2020
Installation torque:	100 Nm
Coil nut torque:	2 Nm
Max contamination level:	NAS 8 ISO 4406 19/17/14
Fluid temperature range:	From -20 to +80 °C
Fatigue cycle life:	1.000.000 cycle at 350 bar
Seal kit std.:	5AG0030

ELECTRIC

Type of voltage:	DC
Insulation index:	H
Nominal voltage:	+/- 10 %
Power at 20 °C:	20,5 W
ED:*	100% with ambient temperature range -20 °C +40 °C
Coil code: *(see page 9.01.002)*	S130-20S

Note: For temperature or special conditions contact our sales department.

E20N-23

Inches
Millimeters

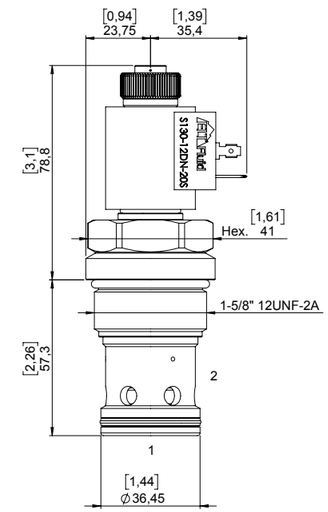

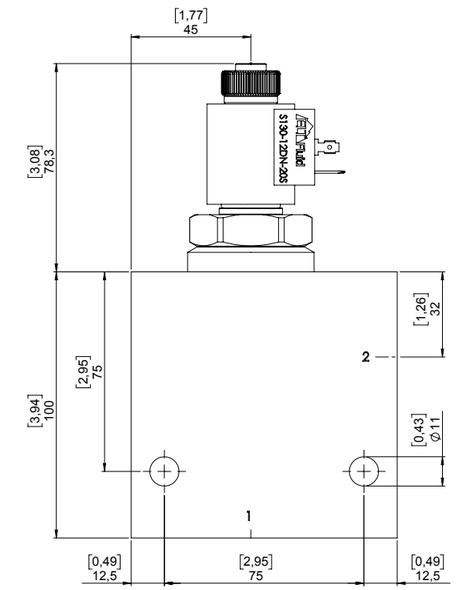

STANDARD HOUSING

Ordering code:	See page 9.05.001
Material:*	Aluminium/Steel Max working pressure for aluminum body: 210 bar Max working pressure for steel body: 350 bar

Note: To correctly select the material, in relation to application, see page S.003.

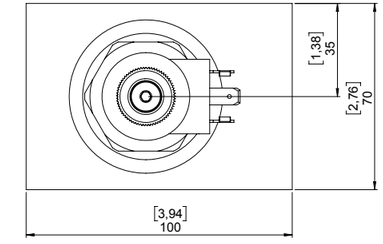

Ordering code

E20N-23 - - -

Seals
- None (std. NBR+Polyurethane)
- **Y**- Polyurethane
- For other options contact Sales dept.

*Options**
- None (std. without override)

Connector
- **DN**- Din
- **DU**- Deutsch
- **AM**- Amp Junior

Voltage
- None (std. without coil)
- **12**- Vdc
- **24**- Vdc

Material std. housing
- **A**- Aluminium
- **S**- Steel

Housing size ports
- None (std. only cartridge)
- **6B**- 1" BSP
- **6S**- SAE 16

Note: Information about manual override is available at page S.001

E20N-28

Solenoid valve 2 ways 2 positions, poppet pilot opereated, normally closed

Description

Electric cartridge valve on/off designed to hold the load or block flow at high pressure application, where low leakage is requested.

Operation mode

COIL NOT POWERED: the valve in closed position blocks flow in both direction. From 2 to 1 and 1 to 2.
COIL POWERED: the valve allows flow in both directions.
From 2 to 1 and from 1 to 2.

GENERAL DATA

Weight without coil: 0,57 Kg (1,25 lbs).
Ambient temperature range: -30 °C a 60 °C xwith standard seals (NBR).
Max. proof pressure: 420 bar (6.090 psi).
Flow Max: 300 l/min (79 gpm).
Cartridge materials: high strength steel, internal parts hardened and grinding.

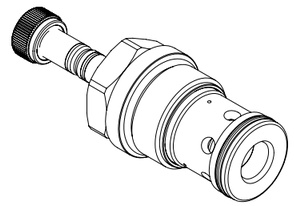

Drawing

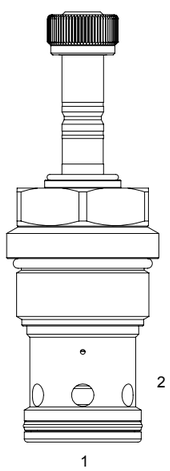

Hydraulic symbol

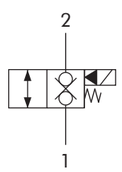

Pressure drop

Oil viscosity: 46 cSt (217 SSU) Fluid temperature: 40 °C

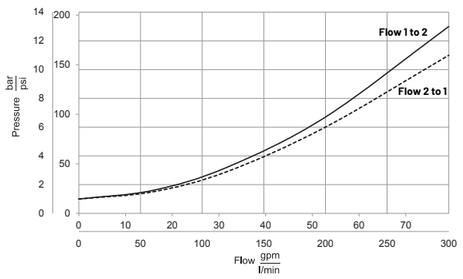

TECHNICAL DATA

HYDRAULIC	
Max. working pressure:	350 bar (5.075 psi)
Flow rate:	min 5 l/min (1,3 gpm) max 300 l/min (79 gpm)
Fluid: *Viscosity:*	Mineral based oil From 15cSt to 250 cSt
Leakage:	0,50 cc/min (10 drops/min) P max. 350 bar (5.075 psi)
Standard seals:	O-ring NBR Seals Poliurethane
Cavity:	SCN2020
Installation torque:	100 Nm
Coil nut torque:	2 Nm
Max contamination level:	NAS 8 ISO 4406 19/17/14
Fluid temperature range:	From -20 to +80 °C
Fatigue cycle life:	1.000.000 cycle at 350 bar
Seal kit std.:	5AG0030
ELECTRIC	
Type of voltage:	DC
Insulation index:	H
Nominal voltage:	+/- 10 %
Power at 20 °C:	20,5 W
ED:*	100% with ambient temperature range -20 °C +40 °Ccv
Coil code: *(see page 9.01.002)*	S130-20S

**Note:* For temperature or special conditions contact our sales department.

E20N-28

Inches
Millimeters

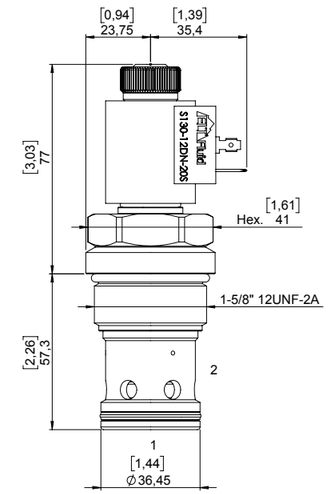

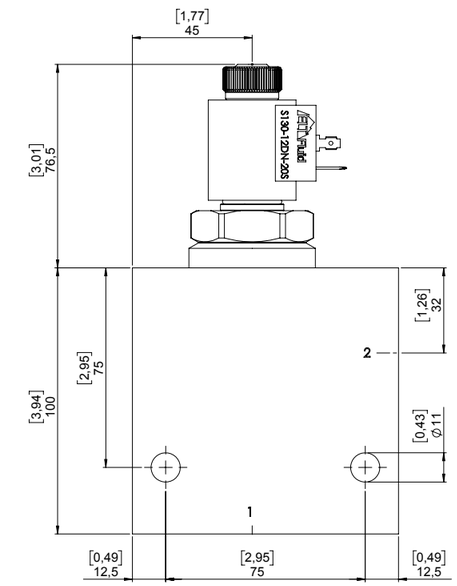

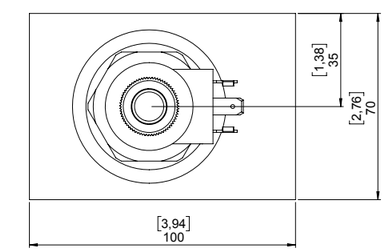

STANDARD HOUSING

Ordering code:	See page 9.05.001
Material:*	Aluminium/Steel Max working pressure for aluminum body: 210 bar Max working pressure for steel body: 350 bar

**Note:* To correctly select the material, in relation to application, see page S.003.

Ordering code

E20N-28 - - -

Seals
- None (std. NBR+Polyurethane)
- **Y**- Polyurethane
- For other options contact Sales dept.

*Options**
- None (std. without override)

Connector
- **DN**- Din
- **DU**- Deutsch
- **AM**- Amp Junior

Voltage
- None (std. without coil)
- **12**- Vdc
- **24**- Vdc

Material std. housing
- **A**- Aluminium
- **S**- Steel

Housing size ports
- None (std. only cartridge)
- **6B**- 1" BSP
- **6S**- SAE 16

**Note:* Information about manual override is available at page S.001

E20N-29

Solenoid valve 2 ways 2 positions, poppet pilot opereated, normally open

Description

Cartridge valve on/off electric valve designed to hold the load or block flow in application where low leakage is requested at high pressure.

Operation mode

COIL NOT POWERED: when is not energized the coil, the valve allow flow in both directions. From 2 to 1 and 1 to 2.
COIL POWERED: when is energized the coil, this valve block flow in both directions. From 2 to 1 and 1 to 2 causing close position.

GENERAL DATA

Weight without coil: 0,57 Kg (1,25 lbs).
Ambient temperature range: -30 °C a 60 °C with standard seals (NBR).
Max. proof pressure: 420 bar (6.090 psi).
Flow Max: 300 l/min (79 gpm).
Cartridge materials: high strength steel, internal parts hardened and grinding.

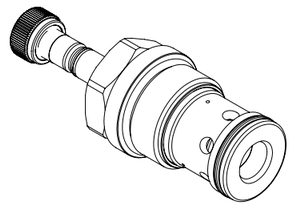

Drawing

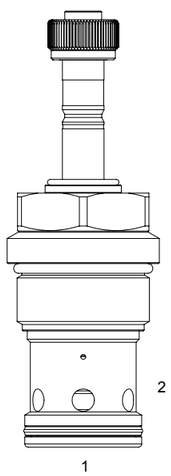

Hydraulic symbol

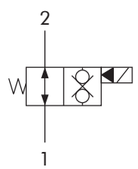

Pressure drop

Oil viscosity: 46 cSt (217 SSU) Fluid temperature: 40 °C

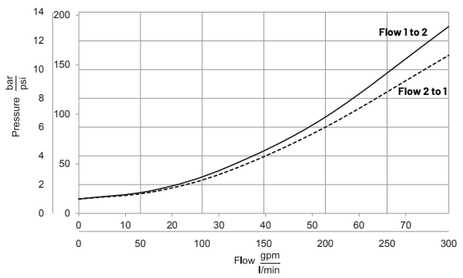

TECHNICAL DATA

HYDRAULIC	
Max. working pressure:	350 bar (5.075 psi)
Flow rate:	min 5 l/min (1,3 gpm) max 300 l/min (79 gpm)
Fluid: *Viscosity:*	Mineral based oil From 15cSt to 250 cSt
Leakage:	0,50 cc/min (10 drops/min) P max. 350 bar (5.075 psi)
Standard seals:	O-ring NBR Seals Poliurethane
Cavity:	SCN2020
Installation torque:	100 Nm
Coil nut torque:	2 Nm
Max contamination level:	NAS 8 ISO 4406 19/17/14
Fluid temperature range:	From -20 to +80 °C
Fatigue cycle life:	1.000.000 cycle at 350 bar
Seal kit std.:	5AG0030
ELECTRIC	
Type of voltage:	DC
Insulation index:	H
Nominal voltage:	+/- 10 %
Power at 20 °C:	20,5 W
ED:*	100% with ambient temperature range -20 °C +40 °C
Coil code: *(see page 9.01.002)*	S130-20S

**Note:* For temperature or special conditions contact our sales department.

E20N-29

Inches
Millimeters

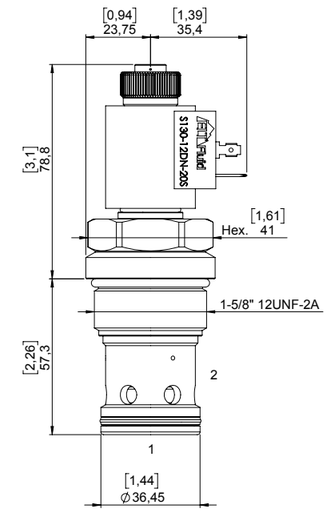

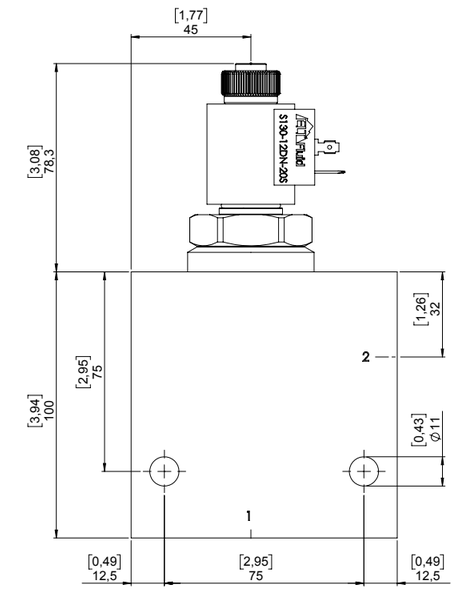

STANDARD HOUSING

Ordering code:	See page 9.05.001
Material:*	Aluminium/Steel Max working pressure for aluminum body: 210 bar Max working pressure for steel body: 350 bar

**Note:* To correctly select the material, in relation to application, see page S.003.

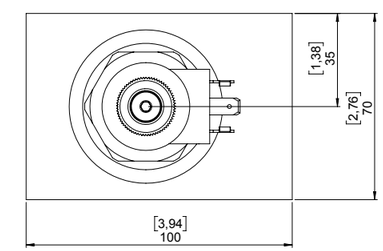

Ordering code

E20N-29 - - -

Seals
- None (std. NBR+Polyurethane)
- **Y**- Polyurethane
- For other options contact Sales dept.

*Options**
- None (std. without override)

Connector
- **DN**- Din
- **DU**- Deutsch
- **AM**- Amp Junior

Voltage
- None (std. without coil)
- **12**- Vdc
- **24**- Vdc

Material std. housing
- **A**- Aluminium
- **S**- Steel

Housing size ports
- None (std. only cartridge)
- **6B**- 1" BSP
- **6S**- SAE 16

**Note:* Information about manual override is available at page S.001

E11N-20

Solenoid valve 2 ways 2 positions, poppet pilot operated, normally closed

Description

Electric cartridge valve on/off designed to hold the load or block flow at high pressure application, where low leakage is requested.

Operation mode

COIL NOT POWERED: the valve in closed position blocks the flow from 2 to 1.
COIL POWERED: the valve allows flow from 2 to 1.

GENERAL DATA

Weight without coil: 0,22 Kg (0,49 lbs).
Ambient temperature range: -30 °C a 60 °C with standard seals (NBR).
Max. proof pressure: 420 bar (6.090 psi).
Flow Max: 70 l/min (18,7 gpm).
Cartridge materials: high strength steel, internal parts hardened and grinding.

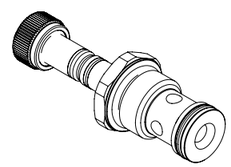

Drawing

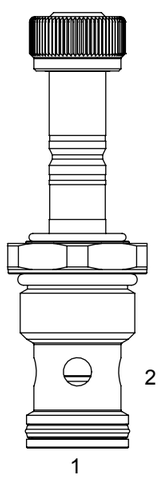

Hydraulic symbol

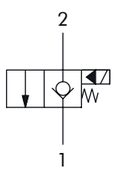

Pressure drop

Oil viscosity: 46 cSt (217 SSU) Fluid temperature: 40 °C

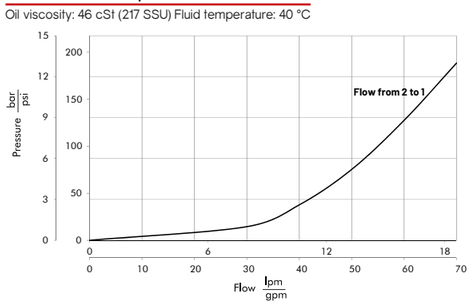

TECHNICAL DATA

HYDRAULIC	
Max. working pressure:	350 bar (5.075 psi)
Flow rate:	min 2 l/min (0,5 gpm) max 70 l/min (18,7 gpm)
Fluid: *Viscosity:*	Mineral based oil From 15cSt to 250 cSt
Leakage:	0,25 cc/min (5 drops/min) P max. 350 bar (5.075 psi)
Standard seals:	O-ring NBR Seals Polyurethane
Cavity:	GCZ1120
Installation torque:	50 Nm
Coil nut torque:	2 Nm
Max contamination level:	NAS 8 ISO 4406 19/17/14
Fluid temperature range:	From -20 °C to +80 °C
Fatigue cycle life:	1.000.000 cycle at 350 bar
Seal kit std.:	5AG0027
ELECTRIC	
Type of voltage:	DC
Insulation index:	H
Nominal voltage:	+/- 10 %
Power at 20 °C:	20,5 W
ED:*	100% with ambient temperature range -20 °C +40 °C
Coil code: *(see page 9.01.002)*	S130-20S

Note: For temperature or special conditions contact our sales department.

E11N-20

Inches
Millimeters

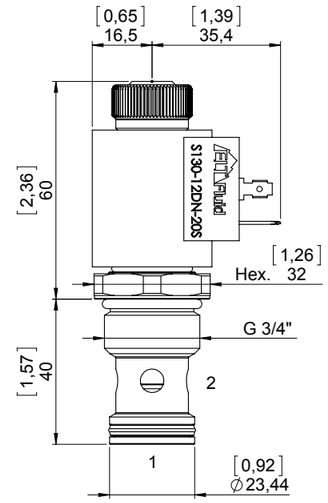

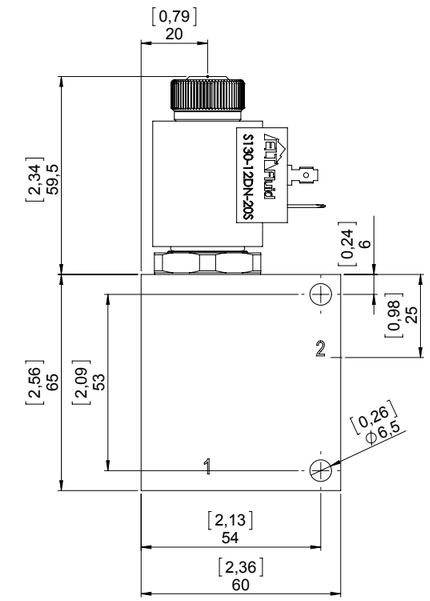

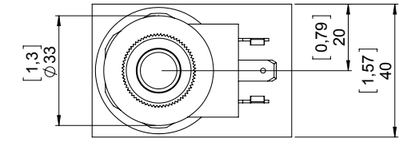

STANDARD HOUSING

Ordering code:	See page 9.07.001
Material:*	Aluminium/Steel Max working pressure for aluminum body: 210 bar Max working pressure for steel body: 350 bar

Note: To correctly select the material, in relation to application, see page S.003.

Ordering code

E11N-20 - - -

Seals
- None (std. NBR)
- **Y**- Polyurethane
- For other options contact Sales dept.

*Options**
- None (std. without override)
- **S**- Screw out

Connector
- **DN**- Din
- **DU**- Deutsch
- **AM**- Amp Junior

Voltage
- None (std. without coil)
- **12**- Vdc
- **24**- Vdc

Material std. housing
- **A**- Aluminium
- **S**- Steel

Housing size ports
- None (std. only cartridge)
- **4B**- 1/2" BSP
- **5B**- 3/4" BSP
- **2S**- SAE 6
- **3S**- SAE 8

Note: Information about manual override is available at page S.001

Elt Fluid S.r.l.
Via Ganapini, 15/2
Loc. Felina 42035
Castelnovo ne' Monti (RE) ITALY
mail: info@eltfluid.com
P.IVA/C.F 02573790355

E11N-21

Solenoid valve 2 ways 2 positions, poppet pilot operated, normally open

Description

Electric cartridge valve on/off designed to hold the load or block flow at high pressure application, where low leakage is requested.

Operation mode

COIL NOT POWERED: the valve allows flow from 2 to 1.
COIL POWERED: the valve in closed position blocks the flow from 2 to 1.

GENERAL DATA

Weight without coil: 0,22 Kg (0,49 lbs).
Ambient temperature range: -30 °C a 60 °C with standard seals(NBR).
Max. proof pressure: 420 bar (6.090 psi).
Flow Max: 70 l/min (18,7 gpm).
Cartridge materials: high strength steel, internal parts hardened and grinding.

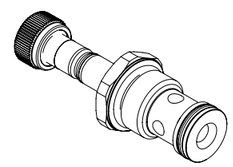

Drawing

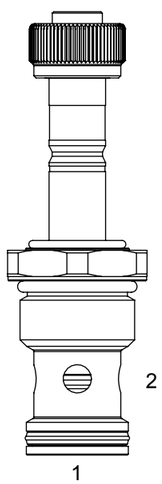

Hydraulic symbol

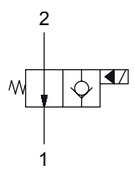

Pressure drop

Oil viscosity: 46 cSt (217 SSU) Fluid temperature: 40 °C

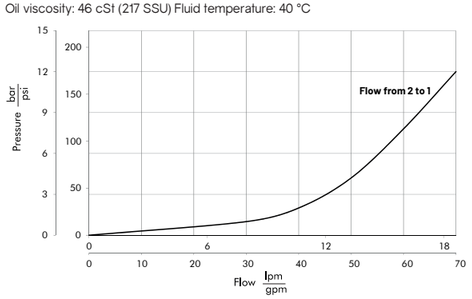

TECHNICAL DATA

HYDRAULIC	
Max. working pressure:	350 bar (5.075 psi)
Flow rate:	min 2 l/min (0,5 gpm) max 70 l/min (18,7 gpm)
Fluid: *Viscosity:*	Mineral based oil From 15cSt to 250 cSt
Leakage:	0,25 cc/min (5 drops/min) P max. 350 bar (5.075 psi)
Standard seals:	O-ring NBR Seals Polyurethane
Cavity:	GCZ1120
Installation torque:	50 Nm
Coil nut torque:	2 Nm
Max contamination level:	NAS 8 ISO 4406 19/17/14
Fluid temperature range:	From -20 °C to +80 °C
Fatigue cycle life:	1.000.000 cycle at 350 bar
Seal kit std.:	5AG0027
ELECTRIC	
Type of voltage:	DC
Insulation index:	H
Nominal voltage:	+/- 10 %
Power at 20 °C:	22 W
ED:*	100% with ambient temperature range -20 °C +40 °C
Coil code: *(see page 9.01.002)*	S130-20S

**Note:* For temperature or special conditions contact our sales department.

E11N-21

Inches
Millimeters

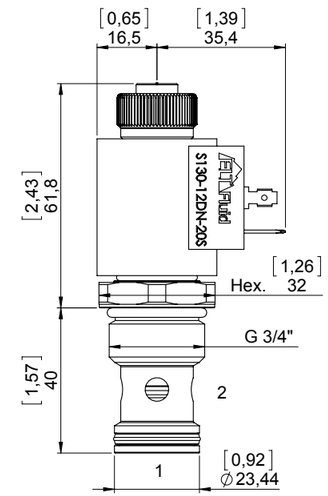

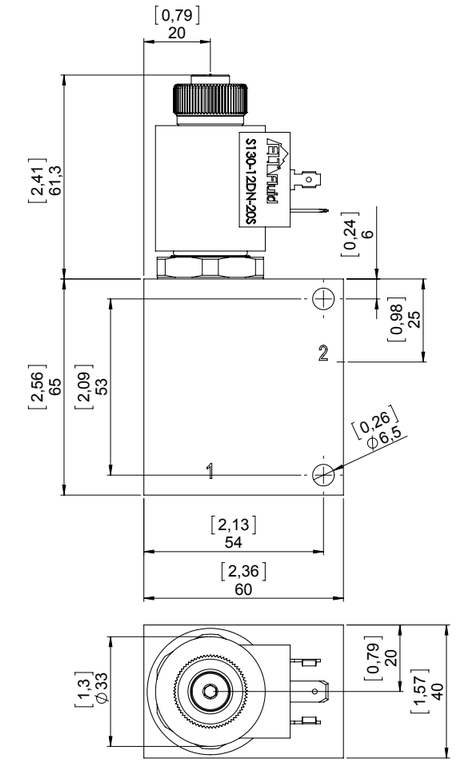

STANDARD HOUSING

Ordering code:	See page 9.07.001
Material:*	Aluminium/Steel Max working pressure for aluminum body: 210 bar Max working pressure for steel body: 350 bar

**Note:* To correctly select the material, in relation to application, see page S.003.

Ordering code

E11N-21 - -

Seals
- None (std. NBR)
- **Y**- Polyurethane
- For other options contact Sales dept.

*Options**
- None (std. without override)
- **P**- Push
- **PT**- Push and twist
- **SV**- Screw in

Connector
- **DN**- Din
- **DU**- Deutsch
- **AM**- Amp Junior

Voltage
- None (std. without coil)
- **12**- Vdc
- **24**- Vdc

Material std. housing
- **A**- Aluminium
- **S**- Steel

Housing size ports
- None (std. only cartridge)
- **4B**- 1/2" BSP
- **5B**- 3/4" BSP
- **2S**- SAE 6
- **3S**- SAE 8

**Note:* Information about manual override is available at page S.001

Elt Fluid S.r.l.
Via Ganapini, 15/2
Loc. Felina 42035
Castelnovo ne' Monti (RE) ITALY
mail: info@eltfluid.com
P.IVA/C.F 02573790355

E11N-22

Solenoid valve 2 ways 2 positions, poppet pilot operated, normally closed

Description

Electric cartridge valve on/off designed to hold the load or block flow at high pressure application where low leakage is requested.

Operation mode

COIL NOT POWERED: the valve in closed position blocks the flow from 2 to 1.
COIL POWERED: the valve allows flow in both directions.
From 2 to 1 and from 1 to 2.

GENERAL DATA

Weight without coil: 0,22 Kg (0,49 lbs).
Ambient temperature range: -30 °C a 60 °C with standard seals (NBR).
Max. proof pressure: 420 bar (6.090 psi).
Flow Max: 70 l/min (18,7 gpm).
Cartridge materials: high strength steel, internal parts hardened and grinding.

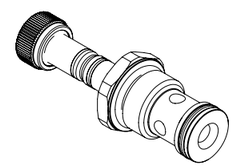

Drawing

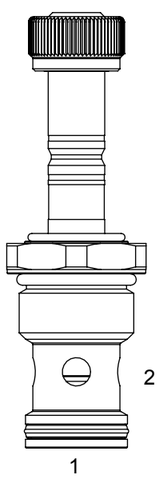

Hydraulic symbol

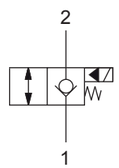

Pressure drop

Oil viscosity: 46 cSt (217 SSU) Fluid temperature: 40 °C

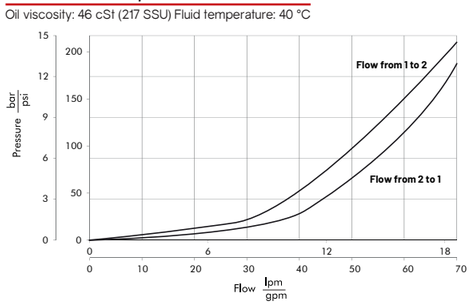

TECHNICAL DATA

HYDRAULIC	
Max. working pressure:	350 bar (5.075 psi)
Flow rate:	min 2 l/min (0,5 gpm) max 70 l/min (18,7 gpm)
Fluid: *Viscosity:*	Mineral based oil From 15cSt to 250 cSt
Leakage:	0,25 cc/min (5 drops/min) P max. 350 bar (5.075 psi)
Standard seals:	O-ring NBR Seals Polyurethane
Cavity:	GCZ1120
Installation torque:	50 Nm
Coil nut torque:	2 Nm
Max contamination level:	NAS 8 ISO 4406 19/17/14
Fluid temperature range:	From -20 °C to +80 °C
Fatigue cycle life:	1.000.000 cycle at 350 bar
Seal kit std.:	5AG0027
ELECTRIC	
Type of voltage:	DC
Insulation index:	H
Nominal voltage:	+/- 10 %
Power at 20 °C:	20,5 W
ED:*	100% with ambient temperature range -20 °C +40 °C
Coil code: *(see page 9.01.002)*	S130-20S

**Note:* For temperature or special conditions contact our sales department.

E11N-22

Inches
Millimeters

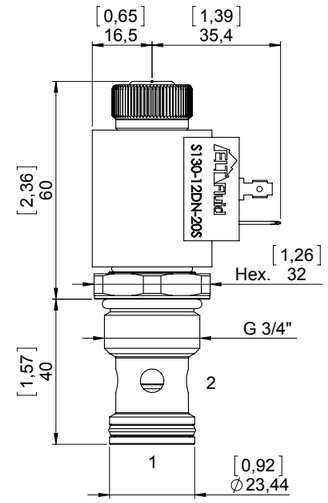

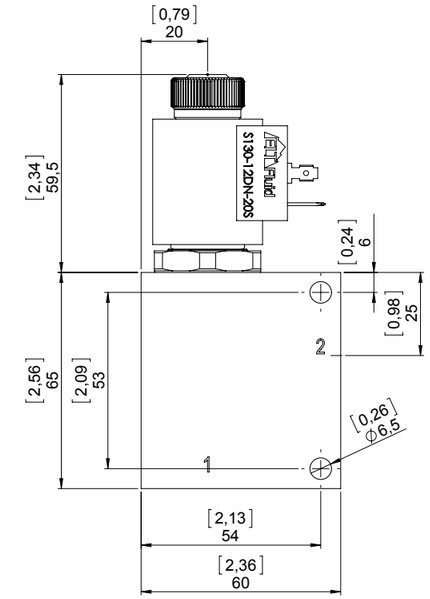

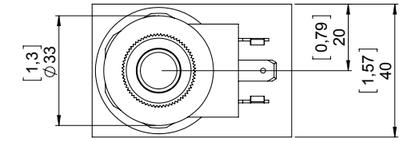

STANDARD HOUSING

Ordering code:	See page 9.07.001
Material:*	Aluminium/Steel Max working pressure for aluminum body: 210 bar Max working pressure for steel body: 350 bar

**Note:* To correctly select the material, in relation to application, see page S.003.

Ordering code

E11N-22 - - -

Seals
- None (std. NBR)
- **Y**- Polyurethane
- For other options contact Sales dept.

*Options**
- None (std. without override)
- **S**- Screw out

Connector
- **DN**- Din
- **DU**- Deutsch
- **AM**- Amp Junior

Voltage
- None (std. without coil)
- **12**- Vdc
- **24**- Vdc

Material std. housing
- **A**- Aluminium
- **S**- Steel

Housing size ports
- None (std. only cartridge)
- **4B**- 1/2" BSP
- **5B**- 3/4" BSP
- **2S**- SAE 6
- **3S**- SAE 8

**Note:* Information about manual override is available at page S.001

Elt Fluid S.r.l.
Via Ganapini, 15/2
Loc. Felina 42035
Castelnovo ne' Monti (RE) ITALY
mail: info@eltfluid.com
P.IVA/C.F 02573790355

E11N-23

Solenoid valve 2 ways 2 positions, poppet pilot operated, normally open

Description

Electric cartridge valve on/off designed to hold the load or block flow at high pressure application, where low leakage is requested.

Operation mode

COIL NOT POWERED: the valve allows flow in both directions.
From 2 to 1 and from 1 to 2.
COIL POWERED: the valve in closed position blocks the flow from 2 to 1.

GENERAL DATA

Weight without coil: 0,22 Kg (0,49 lbs).
Ambient temperature range: -30 °C a 60 °C with standard seals (NBR).
Max. proof pressure: 420 bar (6.090 psi).
Flow Max: 70 l/min (18,7 gpm).
Cartridge materials: high strength steel, internal parts hardened and grinding.

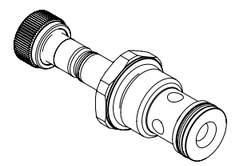

Drawing

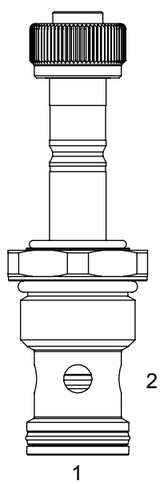

Hydraulic symbol

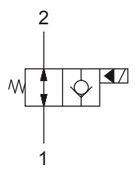

Pressure drop

Oil viscosity: 46 cSt (217 SSU) Fluid temperature: 40 °C

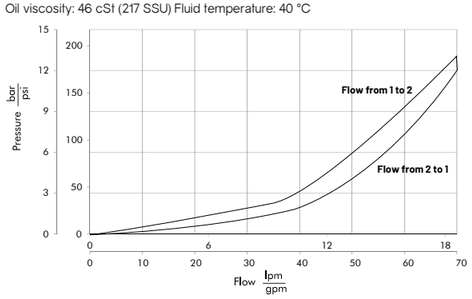

TECHNICAL DATA

HYDRAULIC	
Max. working pressure:	350 bar (5.075 psi)
Flow rate:	min 2 l/min (0,5 gpm) max 70 l/min (18,7 gpm)
Fluid: *Viscosity:*	Mineral based oil From 15cSt to 250 cSt
Leakage:	0,25 cc/min (5 drops/min) P max. 350 bar (5.075 psi)
Standard seals:	O-ring NBR Seals Polyurethane
Cavity:	GCZ1120
Installation torque:	50 Nm
Coil nut torque:	2 Nm
Max contamination level:	NAS 8 ISO 4406 19/17/14
Fluid temperature range:	From -20 °C to +80 °C
Fatigue cycle life:	1.000.000 cycle at 350 bar
Seal kit std.:	5AG0027
ELECTRIC	
Type of voltage:	DC
Insulation index:	H
Nominal voltage:	+/- 10 %
Power at 20 °C:	20,5 W
ED:*	100% with ambient temperature range -20 °C +40 °C
Coil code: *(see page 9.01.002)*	S130-20S

**Note:* For temperature or special conditions contact our sales department.

Inches
Millimeters

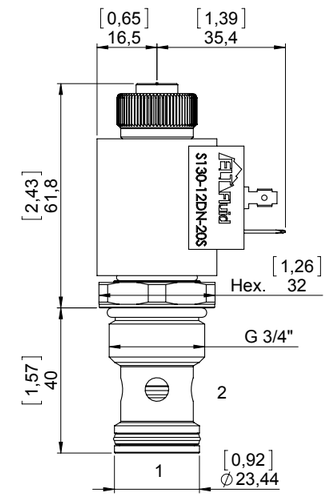

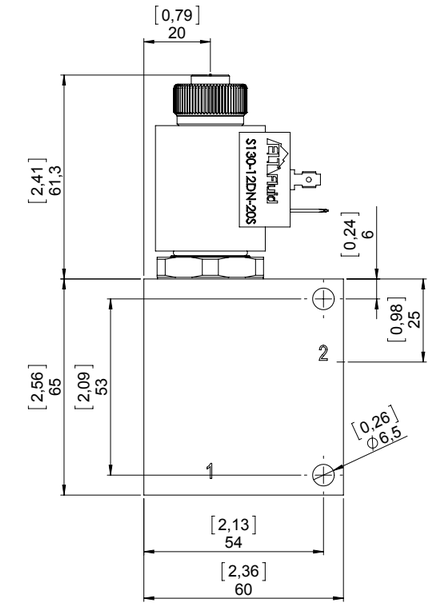

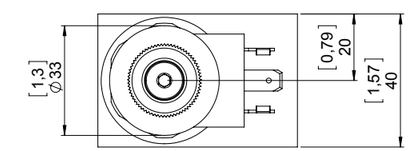

STANDARD HOUSING

Ordering code:	See page 9.07.001
Material:*	Aluminium/Steel Max working pressure for aluminum body: 210 bar Max working pressure for steel body: 350 bar

**Note:* To correctly select the material, in relation to application, see page S.003.

Ordering code

E11N-23 - -

Seals
- None (std. NBR)
- **Y**- Polyurethane
- For other options contact Sales dept.

*Options**
- None (std. without override)
- **P**- Push
- **PT**- Push and twist
- **SV**- Screw in

Connector
- **DN**- Din
- **DU**- Deutsch
- **AM**- Amp Junior

Voltage
- None (std. without coil)
- **12**- Vdc
- **24**- Vdc

Material std. housing
- **A**- Aluminium
- **S**- Steel

Housing size ports
- None (std. only cartridge)
- **4B**- 1/2" BSP
- **5B**- 3/4" BSP
- **2S**- SAE 6
- **3S**- SAE 8

**Note:* Information about manual override is available at page S.001

Elt Fluid S.r.l.
Via Ganapini, 15/2
Loc. Felina 42035
Castelnovo ne' Monti (RE) ITALY
mail: info@eltfluid.com
P.IVA/C.F 02573790355

E11N-24

Solenoid valve 2 ways 2 positions, poppet pilot operated, normally closed

Description

Electric cartridge valve on/off designed to hold the load or block flow at high pressure application, where low leakage is requested.

Operation mode

COIL NOT POWERED: the valve in closed position blocks the flow from 1 to 2.
COIL POWERED: the valve allows flow from 1 to 2.

GENERAL DATA

Weight without coil: 0,22 Kg (0,49 lbs).
Ambient temperature range: -30 °C a 60 °C with standard seals (NBR).
Max. proof pressure: 420 bar (6.090 psi).
Flow Max: 70 l/min (18,7 gpm).
Cartridge materials: high strength steel, internal parts hardened and grinding.

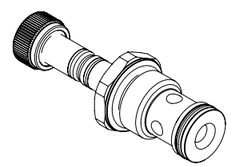

Drawing

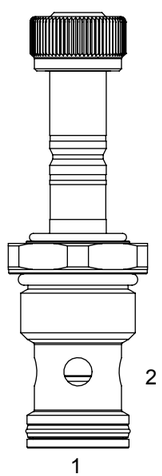

Hydraulic symbol

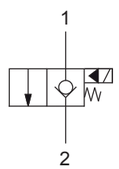

Pressure drop

Oil viscosity: 46 cSt (217 SSU) Fluid temperature: 40 °C

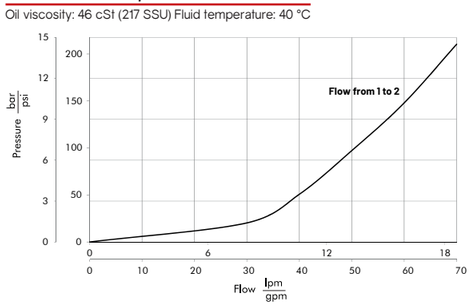

TECHNICAL DATA

HYDRAULIC	
Max. working pressure:	350 bar (5.075 psi)
Flow rate:	min 2 l/min (0,5 gpm) max 70 l/min (18,7 gpm)
Fluid: *Viscosity:*	Mineral based oil From 15cSt to 250 cSt
Leakage:	0,25 cc/min (5 drops/min) P max. 350 bar (5.075 psi)
Standard seals:	O-ring NBR Seals Polyurethane
Cavity:	GCZ1120
Installation torque:	50 Nm
Coil nut torque:	2 Nm
Max contamination level:	NAS 8 ISO 4406 19/17/14
Fluid temperature range:	Da -20 °C a +80 °C
Fatigue cycle life:	1.000.000 cycle at 350 bar
Seal kit std.:	5AG0027
ELECTRIC	
Type of voltage:	DC
Insulation index:	H
Nominal voltage:	+/- 10 %
Power at 20 °C:	20,5 W
ED:*	100% with ambient temperature range -20 °C +40 °C
Coil code: *(see page 9.01.002)*	S130-20S

**Note:* For temperature or special conditions contact our sales department.

E11N-24

Inches
Millimeters

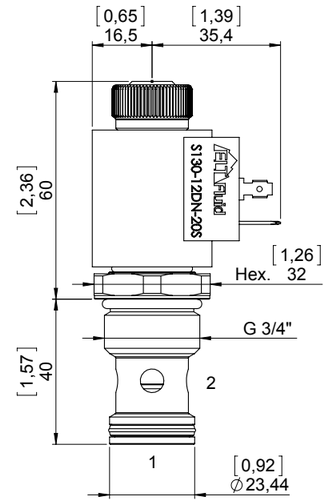

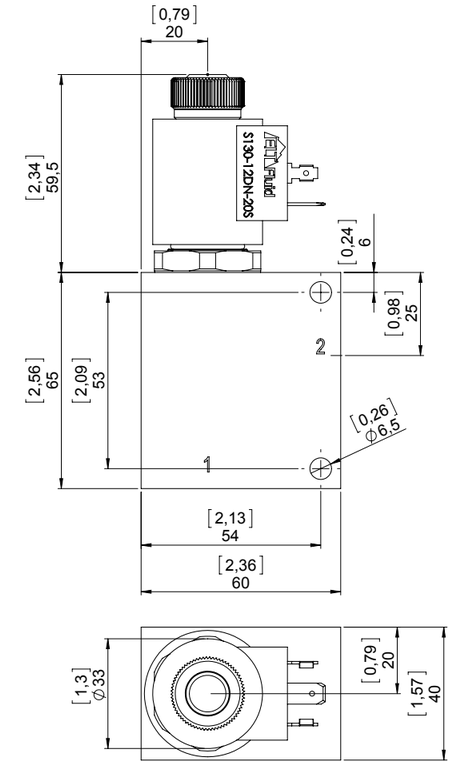

STANDARD HOUSING

Ordering code:	See page 9.07.001
Material:*	Aluminium/Steel Max working pressure for aluminum body: 210 bar Max working pressure for steel body: 350 bar

**Note:* To correctly select the material, in relation to application, see page S.003.

Ordering code

E11N-24 - -

Seals
- None (std. NBR)
- **Y**- Polyurethane
- For other options contact Sales dept.

*Options**
- None (std. without override)
- **S**- Screw out

Connector
- **DN**- Din
- **DU**- Deutsch
- **AM**- Amp Junior

Voltage
- None (std. without coil)
- **12**- Vdc
- **24**- Vdc

Material std. housing
- **A**- Aluminium
- **S**- Steel

Housing size ports
- None (std. only cartridge)
- **4B**- 1/2" BSP
- **5B**- 3/4" BSP
- **2S**- SAE 6
- **3S**- SAE 8

**Note:* Information about manual override is available at page S.001

Elt Fluid S.r.l.
Via Ganapini, 15/2
Loc. Felina 42035
Castelnovo ne' Monti (RE) ITALY
mail: info@eltfluid.com
P.IVA/C.F 02573790355

E11N-25

Solenoid valve 2 ways 2 positions, poppet pilot operated, normally open

Description

Electric cartridge valve on/off designed to hold the load or block flow at high pressure application, where low leakage is requested.

Operation mode

COIL NOT POWERED: the valve allows flow from 1 to 2.
COIL POWERED: the valve in closed position blocks the flow from 1 to 2.

GENERAL DATA

Weight without coil: 0,22 Kg (0,49 lbs).
Ambient temperature range: -30 °C a 60 °C with standard seals (NBR).
Max. proof pressure: 420 bar (6.090 psi).
Flow Max: 70 l/min (18,7 gpm).
Cartridge materials: high strength steel, internal parts hardened and grinding.

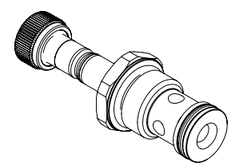

Drawing

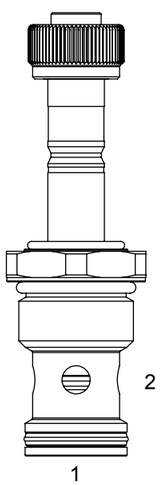

Hydraulic symbol

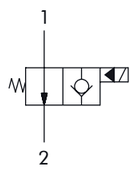

Pressure drop

Oil viscosity: 46 cSt (217 SSU) Fluid temperature: 40 °C

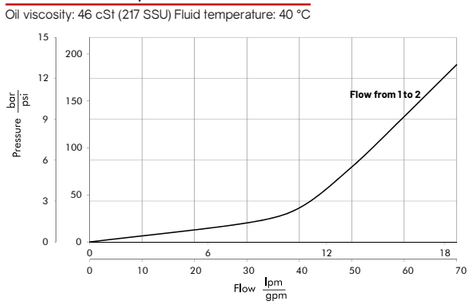

TECHNICAL DATA

HYDRAULIC

Max. working pressure:	350 bar (5.075 psi)
Flow rate:	min 2 l/min (0,5 gpm) max 70 l/min (18,7 gpm)
Fluid: *Viscosity:*	Mineral based oil From 15cSt to 250 cSt
Leakage:	0,25 cc/min (5 drops/min) P max. 350 bar (5.075 psi)
Standard seals:	O-ring NBR Seals Polyurethane
Cavity:	GCZ1120
Installation torque:	50 Nm
Coil nut torque:	2 Nm
Max contamination level:	NAS 8 ISO 4406 19/17/14
Fluid temperature range:	Da -20 °C a +80 °C
Fatigue cycle life:	1.000.000 cycle at 350 bar
Seal kit std.:	5AG0027

ELECTRIC

Type of voltage:	DC
Insulation index:	H
Nominal voltage:	+/- 10 %
Power at 20 °C:	20,5 W
ED:*	100% with ambient temperature range -20 °C +40 °C
Coil code: *(see page 9.01.002)*	S130-20S

**Note:* For temperature or special conditions contact our sales department.

E11N-25

Inches
Millimeters

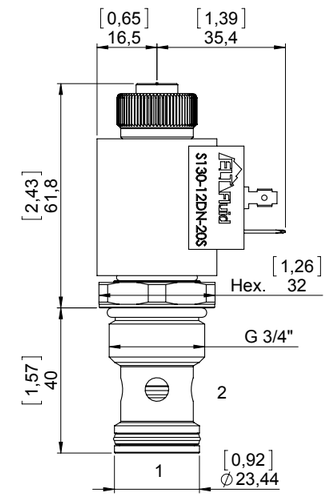

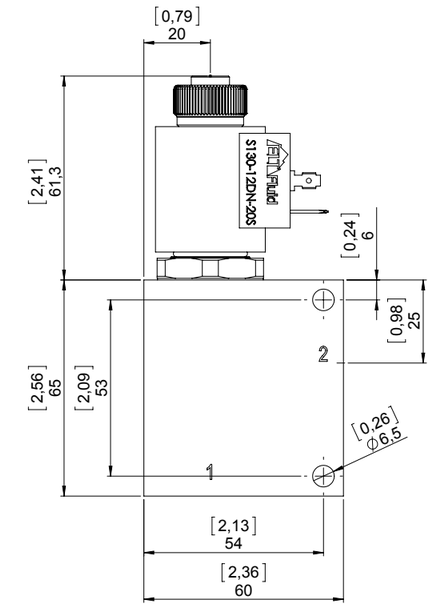

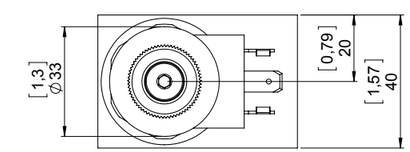

STANDARD HOUSING

Ordering code:	See page 9.07.001
Material:*	Aluminium/Steel Max working pressure for aluminum body: 210 bar Max working pressure for steel body: 350 bar

**Note:* To correctly select the material, in relation to application, see page S.003.

Ordering code

E11N-25 - -

Seals
- None (std. NBR)
- **Y**- Polyurethane
- For other options contact Sales dept.

*Options**
- None (std. without override)
- **P**- Push
- **PT**- Push and twist
- **SV**- Screw in

Connector
- **DN**- Din
- **DU**- Deutsch
- **AM**- Amp Junior

Voltage
- None (std. without coil)
- **12**- Vdc
- **24**- Vdc

Material std. housing
- **A**- Aluminium
- **S**- Steel

Housing size ports
- None (std. only cartridge)
- **4B**- 1/2" BSP
- **5B**- 3/4" BSP
- **2S**- SAE 6
- **3S**- SAE 8

**Note:* Information about manual override is available at page S.001

Elt Fluid S.r.l.
Via Ganapini, 15/2
Loc. Felina 42035
Castelnovo ne' Monti (RE) ITALY
mail: info@eltfluid.com
P.IVA/C.F 02573790355

E11N-26

Solenoid valve 2 ways 2 positions, poppet pilot operated, normally closed

Description

Electric cartridge valve on/off designed to hold the load or block flow at high pressure application, where low leakage is requested.

Operation mode

COIL NOT POWERED: the valve in closed position blocks the flow from 1 to 2.
COIL POWERED: the valve allows flow in both directions.
From 1 to 2 and from 2 to 1.

GENERAL DATA

Weight without coil: 0,22 Kg (0,49 lbs).
Ambient temperature range: -30 °C a 60 °C with standard seals (NBR).
Max. proof pressure: 420 bar (6.090 psi).
Flow Max: 70 l/min (18,7 gpm).
Cartridge materials: high strength steel, internal parts hardened and grinding.

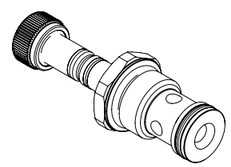

Drawing

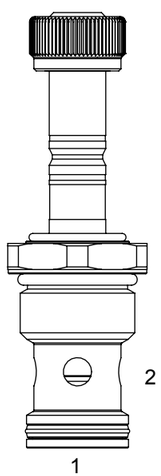

Hydraulic symbol

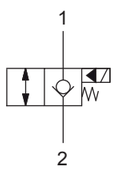

Pressure drop

Oil viscosity: 46 cST (217 SSU) Fluid temperature: 40 °C

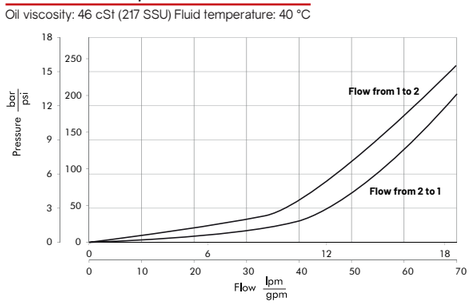

TECHNICAL DATA

HYDRAULIC	
Max. working pressure:	350 bar (5.075 psi)
Flow rate:	min 2 l/min (0,5 gpm) max 70 l/min (18,7 gpm)
Fluid: *Viscosity:*	Mineral based oil From 15cSt to 250 cSt
Leakage:	0,25 cc/min (5 drops/min) P max. 350 bar (5.075 psi)
Standard seals:	O-ring NBR Seals Polyurethane
Cavity:	GCZ1120
Installation torque:	50 Nm
Coil nut torque:	2 Nm
Max contamination level:	NAS 8 ISO 4406 19/17/14
Fluid temperature range:	Da -20 °C a +80 °C
Fatigue cycle life:	1.000.000 cycle at 350 bar
Seal kit std.:	5AG0027
ELECTRIC	
Type of voltage:	DC
Insulation index:	H
Nominal voltage:	+/- 10 %
Power at 20 °C:	20,5 W
ED:*	100% with ambient temperature range -20 °C +40 °C
Coil code: *(see page 9.01.002)*	S130-20S

**Note:* For temperature or special conditions contact our sales department.

E11N-26

Inches
Millimeters

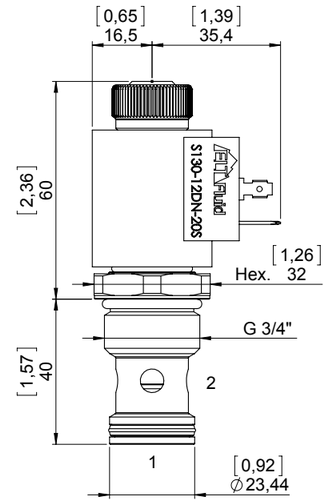

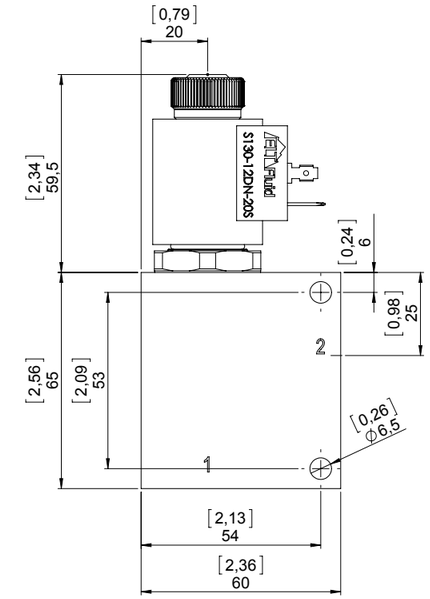

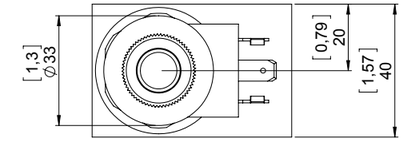

STANDARD HOUSING

Ordering code:	See page 9.07.001
Material:*	Aluminium/Steel Max working pressure for aluminum body: 210 bar Max working pressure for steel body: 350 bar

**Note:* To correctly select the material, in relation to application, see page S.003.

Ordering code

E11N-26 - -

Seals
- None (std. NBR)
- **Y**- Polyurethane
- For other options contact Sales dept.

*Options**
- None (std. without override)
- **S**- Screw out

Connector
- **DN**- Din
- **DU**- Deutsch
- **AM**- Amp Junior

Voltage
- None (std. without coil)
- **12**- Vdc
- **24**- Vdc

Material std. housing
- **A**- Aluminium
- **S**- Steel

Housing size ports
- None (std. only cartridge)
- **4B**- 1/2" BSP
- **5B**- 3/4" BSP
- **2S**- SAE 6
- **3S**- SAE 8

**Note:* Information about manual override is available at page S.001

Elt Fluid S.r.l.
Via Ganapini, 15/2
Loc. Felina 42035
Castelnovo ne' Monti (RE) ITALY
mail: info@eltfluid.com
P.IVA/C.F 02573790355

E11N-27

Solenoid valve 2 ways 2 positions, poppet pilot operated, normally open

Description

Electric cartridge valve on/off designed to hold the load or block flow at high pressure application, where low leakage is requested.

Operation mode

COIL NOT POWERED: when is not energized the coil, the valve allow flow in both directions.
From 1 to 2 and 2 to 1.
COIL POWERED: when is energized the coil, this valve block flow from 1 to 2 causing close position.

GENERAL DATA

Weight without coil: 0,22 Kg (0,49 lbs).
Ambient temperature range: -30 °C a 60 °C with standard seals (NBR).
Max. proof pressure: 420 bar (6.090 psi).
Flow Max: 70 l/min (18,7 gpm).
Cartridge materials: high strength steel, internal parts hardened and grinding.

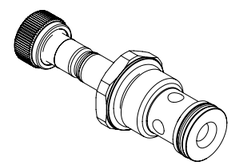

Drawing

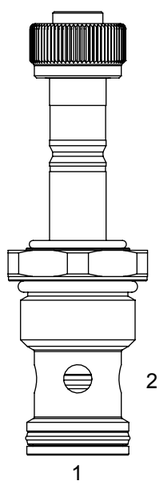

Hydraulic symbol

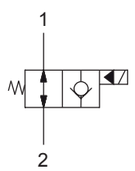

Pressure drop

Oil viscosity: 46 cSt (217 SSU) Fluid temperature: 40 °C

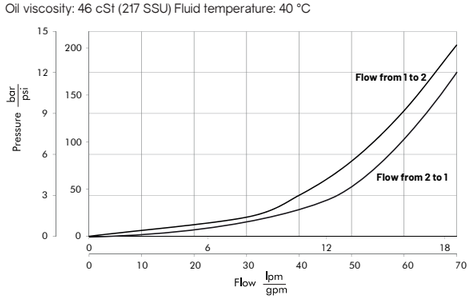

TECHNICAL DATA

HYDRAULIC	
Max. working pressure:	350 bar (5.075 psi)
Flow rate:	min 2 l/min (0,5 gpm) max 70 l/min (18,7 gpm)
Fluid: *Viscosity:*	Mineral based oil From 15cSt to 250 cSt
Leakage:	0,25 cc/min (5 drops/min) P max. 350 bar (5.075 psi)
Standard seals:	O-ring NBR Seals Polyurethane
Cavity:	GCZ1120
Installation torque:	50 Nm
Coil nut torque:	2 Nm
Max contamination level:	NAS 8 ISO 4406 19/17/14
Fluid temperature range:	From -20 °C to +80 °C
Fatigue cycle life:	1.000.000 cycle at 350 bar
Seal kit std.:	5AG0027
ELECTRIC	
Type of voltage:	DC
Insulation index:	H
Nominal voltage:	+/- 10 %
Power at 20 C°:	20,5 W
ED:*	100% with ambient temperature range -20 °C +40 °C
Coil code: *(see page 9.01.002)*	S130-20S

Note: For temperature or special conditions contact our sales department.

E11N-27

Inches
Millimeters

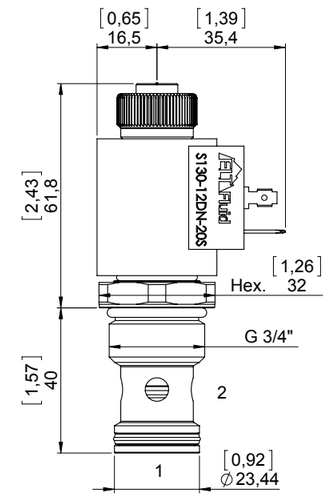

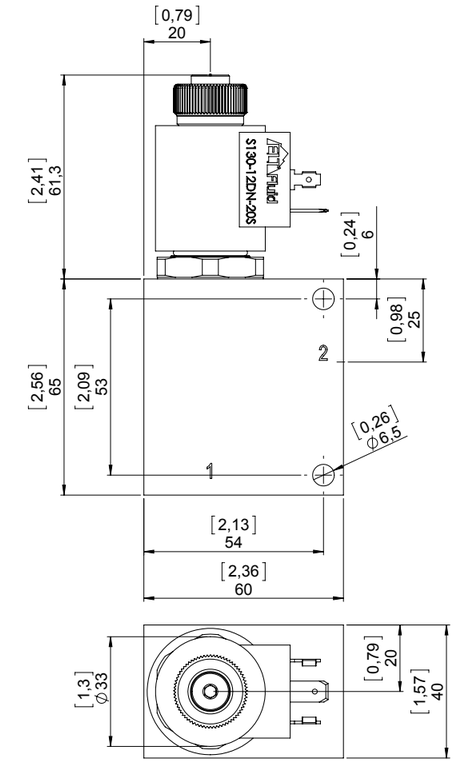

STANDARD HOUSING

Ordering code:	See page 9.07.001
Material:*	Aluminium/Steel Max working pressure for aluminum body: 210 bar Max working pressure for steel body: 350 bar

Note: To correctly select the material, in relation to application, see page S.003.

Ordering code

E11N-27 - -

Seals
- None (std. NBR)
- **Y**- Polyurethane
- For other options contact Sales dept.

Options*
- None (std. without override)
- **P**- Push
- **PT**- Push and twist
- **SV**- Screw in

Connector
- **DN**- Din
- **DU**- Deutsch
- **AM**- Amp Junior

Voltage
- None (std. without coil)
- **12**- Vdc
- **24**- Vdc

Material std. housing
- **A**- Aluminium
- **S**- Steel

Housing size ports
- None (std. only cartridge)
- **4B**- 1/2" BSP
- **5B**- 3/4" BSP
- **2S**- SAE 6
- **3S**- SAE 8

Note: Information about manual override is available at page S.001

Elt Fluid S.r.l.
Via Ganapini, 15/2
Loc. Felina 42035
Castelnovo ne' Monti (RE) ITALY
mail: info@eltfluid.com
P.IVA/C.F 02573790355

E11N-28

Solenoid valve 2 ways 2 positions, poppet pilot operated, normally closed

Description

Electric cartridge valve on/off designed to hold the load or block flow at high pressure application, where low leakage is requested.

Operation mode

COIL NOT POWERED: the valve in closed position blocks flow in both direction. From 2 to 1 and 1 to 2.
COIL POWERED: the valve allows flow in both directions.
From 2 to 1 and from 1 to 2.

GENERAL DATA

Weight without coil: 0,22 Kg (0,49 lbs).
Ambient temperature range: -30 °C a 60 °C with standard seals (NBR).
Max. proof pressure: 420 bar (6.000 psi).
Flow Max: 70 l/min (18,6 gpm).
Cartridge materials: high strength steel, internal parts hardened and grinding.

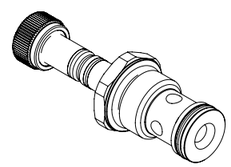

Drawing

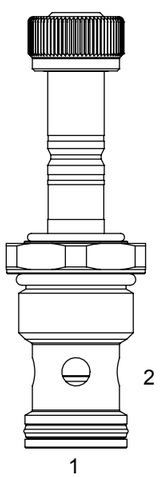

Hydraulic symbol

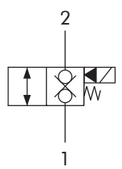

Pressure drop

Oil viscosity: 46 cSt (217 SSU) Fluid temperature: 40 °C

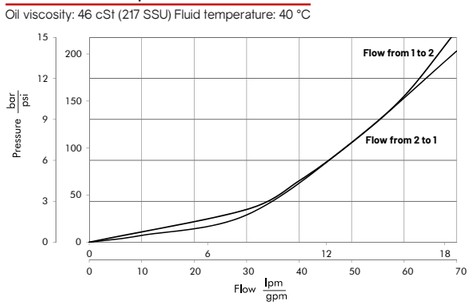

TECHNICAL DATA

HYDRAULIC

Max. working pressure:	350 bar (5.075 psi)
Flow rate:	min 2 l/min (0,5 gpm) max 70 l/min (18,7 gpm)
Fluid: *Viscosity:*	Mineral based oil From 15cSt to 250 cSt
Leakage:	0,5 cc/min (10 drops/min) P max. 350 bar (5.075 psi)
Standard seals:	O-ring NBR Seals Polyurethane
Cavity:	GCZ1120
Installation torque:	50 Nm
Coil nut torque:	2 Nm
Max contamination level:	NAS 8 ISO 4406 19/17/14
Fluid temperature range:	From -20 °C to +80 °C
Fatigue cycle life:	1.000.000 cycle at 350 bar
Seal kit std.:	5AG0027

ELECTRIC

Type of voltage:	DC
Insulation index:	H
Nominal voltage:	+/- 10 %
Power at 20 °C:	20,5 W
ED:*	100% with ambient temperature range -20 °C +40 °C
Coil code: *(see page 9.01.002)*	S130-20S

**Note:* For temperature or special conditions contact our sales department.

E11N-28

Inches
Millimeters

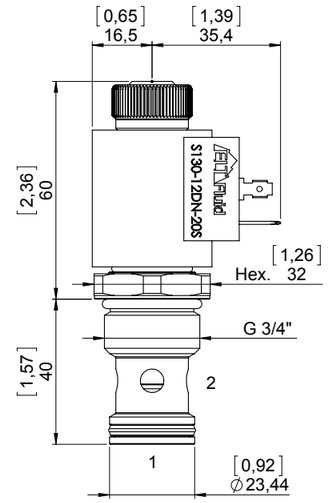

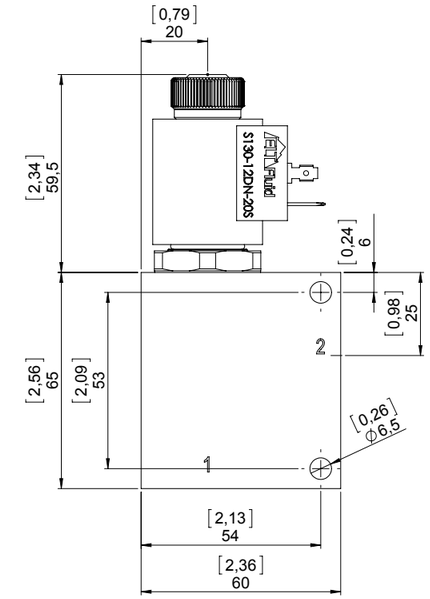

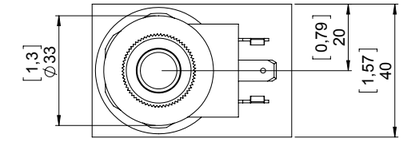

STANDARD HOUSING

Ordering code:	See page 9.07.001
Material:*	Aluminium/Steel Max working pressure for aluminum body: 210 bar Max working pressure for steel body: 350 bar

**Note:* To correctly select the material, in relation to application, see page S.003.

Ordering code

E11N-28 - - -

Seals
- None (std. NBR)
- **Y**- Polyurethane
- For other options contact Sales dept.

*Options**
- None (std. without override)
- **S**- Screw out

Voltage
- None (std. without coil)
- **12**- Vdc
- **24**- Vdc

Connector
- **DN**- Din
- **DU**- Deutsch
- **AM**- Amp Junior

Material std. housing
- **A**- Aluminium
- **S**- Steel

Housing size ports
- None (std. only cartridge)
- **4B**- 1/2" BSP
- **5B**- 3/4" BSP
- **2S**- SAE 6
- **3S**- SAE 8

**Note:* Information about manual override is available at page S.001

Elt Fluid S.r.l.
Via Ganapini, 15/2
Loc. Felina 42035
Castelnovo ne' Monti (RE) ITALY
mail: info@eltfluid.com
P.IVA/C.F 02573790355

E11N-29

Solenoid valve 2 ways 2 positions, poppet pilot operated, normally open

Description

Electric cartridge valve on/off designed to hold the load or block flow at high pressure application, where low leakage is requested.

Operation mode

COIL NOT POWERED: the valve allows flow in both directions. From 1 to 2 and from 2 to 1.
COIL POWERED: the valve in closed position blocks flow in both direction. From 2 to 1 and 1 to 2.

GENERAL DATA

Weight without coil: 0,22 Kg (0,49 lbs).
Ambient temperature range: -30 °C a 60 °C with standard seals (NBR).
Max. proof pressure: 420 bar (6.000 psi).
Flow Max: 70 l/min (18,6 gpm).
Cartridge materials: high strength steel, internal parts hardened and grinding.

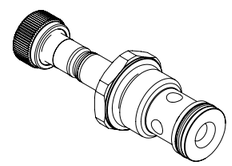

Drawing

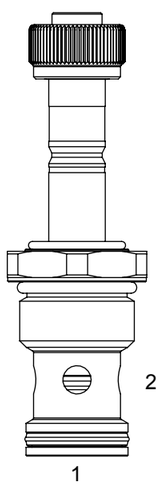

Hydraulic symbol

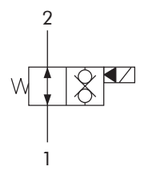

Pressure drop

Oil viscosity: 46 cSt (217 SSU) Fluid temperature: 40 °C

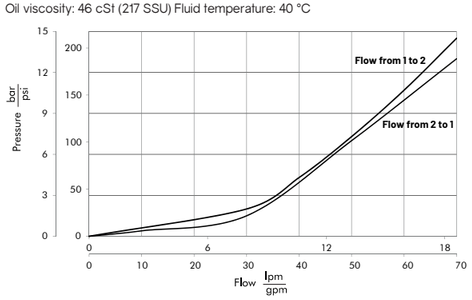

TECHNICAL DATA

HYDRAULIC	
Max. working pressure:	350 bar (5.075 psi)
Flow rate:	min 2 l/min (0,5 gpm) max 70 l/min (18,7 gpm)
Fluid: *Viscosity:*	Mineral based oil From 15cSt to 250 cSt
Leakage:	0,5 cc/min (10 drops/min) P max. 350 bar (5.075 psi)
Standard seals:	O-ring NBR Seals Polyurethane
Cavity:	GCZ1120
Installation torque:	50 Nm
Coil nut torque:	2 Nm
Max contamination level:	NAS 8 ISO 4406 19/17/14
Fluid temperature range:	From -20 °C to +80 °C
Fatigue cycle life:	1.000.000 cycle at 350 bar
Seal kit std.:	5AG0027
ELECTRIC	
Type of voltage:	DC
Insulation index:	H
Nominal voltage:	+/- 10 %
Power at 20 °C:	20,5 W
ED:*	100% with ambient temperature range -20 °C +40 °C
Coil code: *(see page 9.01.002)*	S130-20S

**Note:* For temperature or special conditions contact our sales department.

E11N-29

Inches
Millimeters

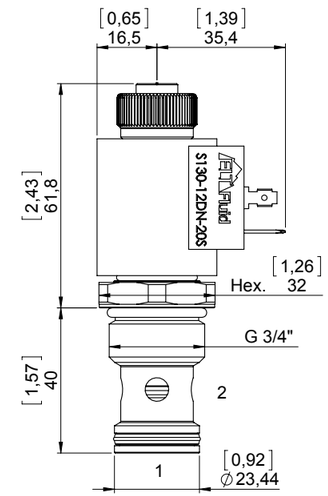

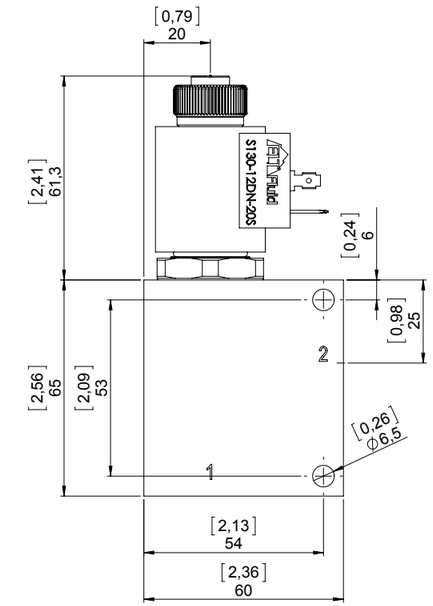

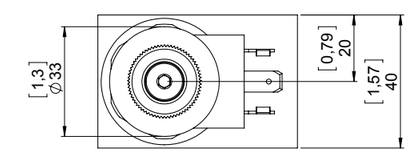

STANDARD HOUSING

Ordering code:	See page 9.07.001
Material:*	Aluminium/Steel Max working pressure for aluminum body: 210 bar Max working pressure for steel body: 350 bar

**Note:* To correctly select the material, in relation to application, see page S.003.

Ordering code

E11N-29 - -

Seals
- None (std. NBR)
- **Y**- Polyurethane
- For other options contact Sales dept.

*Options**
- None (std. without override)
- **P**- Push
- **PT**- Push and twist
- **SV**- Screw in

Connector
- **DN**- Din
- **DU**- Deutsch
- **AM**- Amp Junior

Voltage
- None (std. without coil)
- **12**- Vdc
- **24**- Vdc

Material std. housing
- **A**- Aluminium
- **S**- Steel

Housing size ports
- None (std. only cartridge)
- **4B**- 1/2" BSP
- **5B**- 3/4" BSP
- **2S**- SAE 6
- **3S**- SAE 8

**Note:* Information about manual override is available at page S.001

Elt Fluid S.r.l.
Via Ganapini, 15/2
Loc. Felina 42035
Castelnovo ne' Monti (RE) ITALY
mail: info@eltfluid.com
P.IVA/C.F 02573790355

E13N-20

Solenoid valve 2 ways 2 positions, poppet pilot operated, normally closed

Description

Electric cartridge valve on/off designed to hold the load or block flow at high pressure application where low leakage is requested.

Operation mode

COIL NOT POWERED: the valve in closed position blocks the flow from 2 to 1.
COIL POWERED: the valve allows flow from 2 to 1.

GENERAL DATA

Weight without coil: 0,38 Kg (0,84 lbs).
Ambient temperature range: -30 °C a 60 °C with standard seals (NBR).
Max. proof pressure: 420 bar (6.090 psi).
Flow Max: 110 l/min (29 gpm).
Cartridge materials: high strength steel, internal parts hardened and grinding.

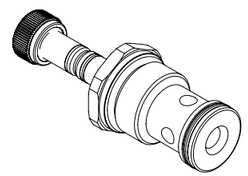

Drawing

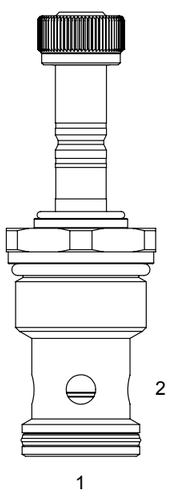

Hydraulic symbol

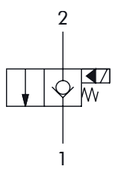

Pressure drop

Oil viscosity: 46 cSt (217 SSU) Fluid temperature: 40 °C

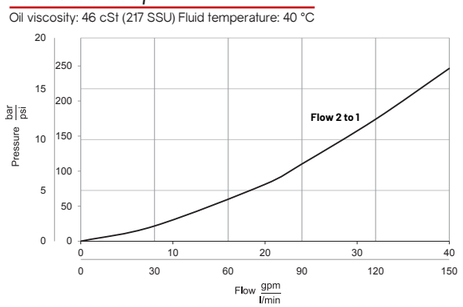

TECHNICAL DATA

HYDRAULIC	
Max. working pressure:	350 bar (5.075 psi)
Flow rate:	min 5 l/min (1,3 gpm) max 110 l/min (29 gpm)
Fluid: *Viscosity:*	Mineral based oil From 15cSt to 250 cSt
Leakage:	0,25 cc/min (5 drops/min) P max. 350 bar (5.075 psi)
Standard seals:	O-ring NBR Seals Poliurethane
Cavity:	GCZ1320
Installation torque:	80 Nm
Coil nut torque:	2 Nm
Max contamination level:	NAS 8 ISO 4406 19/17/14
Fluid temperature range:	From -20 to +80 °C
Fatigue cycle life:	1.000.000 cycle at 350 bar
Seal kit std.:	5AG0031
ELECTRIC	
Type of voltage:	DC
Insulation index:	H
Nominal voltage:	+/- 10 %
Power at 20 °C:	20,5 W
ED:*	100% with ambient temperature range -20 °C +40 °C
Coil code: *(see page 9.01.002)*	S130-20S

Note: For temperature or special conditions contact our sales department.

E13N-20

Inches
Millimeters

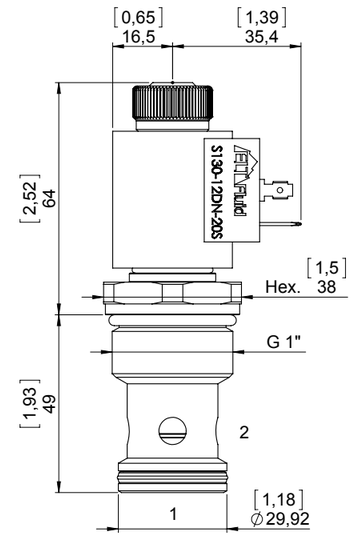

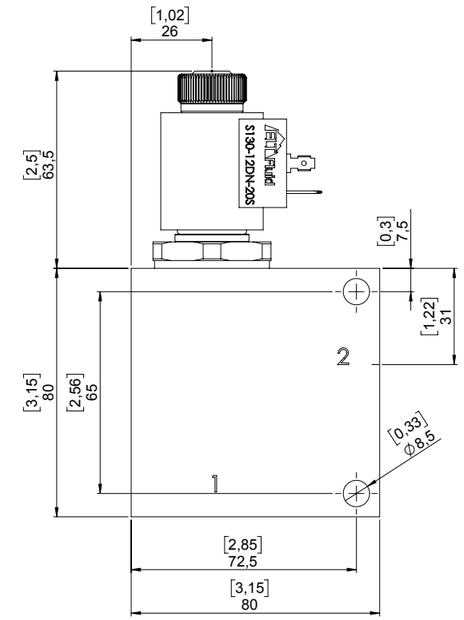

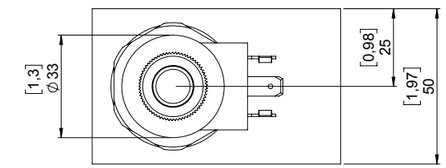

STANDARD HOUSING

Ordering code:	See page 9.07.002
Material:*	Aluminium/Steel Max working pressure for aluminum body: 210 bar Max working pressure for steel body: 350 bar

Note: To correctly select the material, in relation to application, see page S.003.

Ordering code

E13N-20 - -

Seals
- None (std. NBR)
- **Y**- Polyurethane
- For other options contact Sales dept.

Options*
- None (std. without override)
- **S**- Screw out

Connector
- **DN**- Din
- **DU**- Deutsch
- **AM**- Amp Junior

Voltage
- None (std. without coil)
- **12**- Vdc
- **24**- Vdc

Material std. housing
- **A**- Aluminium
- **S**- Steel

Housing size ports
- None (std. only cartridge)
- **5B** - 3/4" BSP
- **6B**- 1" BSP

Note: Information about manual override is available at page S.001

E13N-21

Solenoid valve 2 ways 2 positions, poppet pilot operated, normally open

Description

Electric cartridge valve on/off designed to hold the load or block flow at high pressure application, where low leakage is requested.

Operation mode

COIL NOT POWERED: the valve allows flow from 2 to 1.
COIL POWERED: the valve in closed position blocks the flow from 2 to 1.

GENERAL DATA

Weight without coil: 0,38 Kg (0,84 lbs).
Ambient temperature range: -30 °C a 60 °C with standard seals (NBR).
Max. proof pressure: 420 bar (6.090 psi).
Flow Max: 110 l/min (29 gpm).
Cartridge materials: high strength steel, internal parts hardened and grinding.

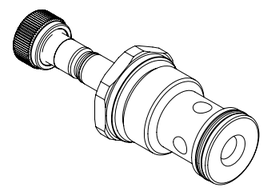

Drawing

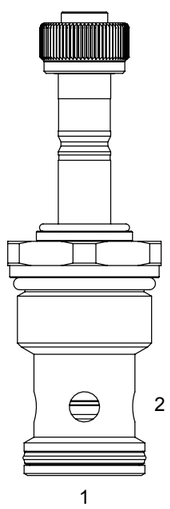

Hydraulic symbol

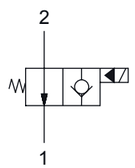

Pressure drop

Oil viscosity: 46 cSt (217 SSU) Fluid temperature: 40 °C

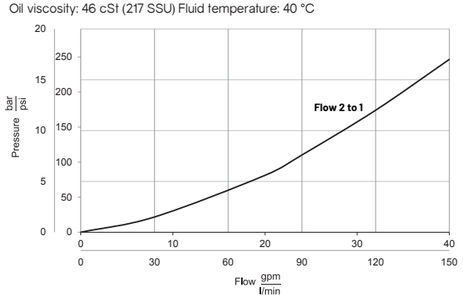

TECHNICAL DATA

HYDRAULIC

Max. working pressure:	350 bar (5.075 psi)
Flow rate:	min 5 l/min (1,3 gpm) max 110 l/min (29 gpm)
Fluid: *Viscosity:*	Mineral based oil From 15cSt to 250 cSt
Leakage:	0,25 cc/min (5 drops/min) P max. 350 bar (5.075 psi)
Standard seals:	O-ring NBR Seals Poliurethane
Cavity:	GCZ1320
Installation torque:	80 Nm
Coil nut torque:	2 Nm
Max contamination level:	NAS 8 ISO 4406 19/17/14
Fluid temperature range:	From -20 to +80 °C
Fatigue cycle life:	1.000.000 cycle at 350 bar
Seal kit std.:	5AG0031

ELECTRIC

Type of voltage:	DC
Insulation index:	H
Nominal voltage:	+/- 10 %
Power at 20 °C:	20,5 W
ED:*	100% with ambient temperature range -20 °C +40 °C
Coil code: *(see page 9.01.002)*	S130-20S

**Note:* For temperature or special conditions contact our sales department.

E13N-21

Inches
Millimeters

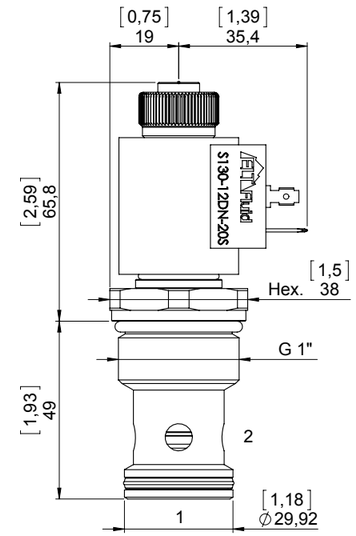

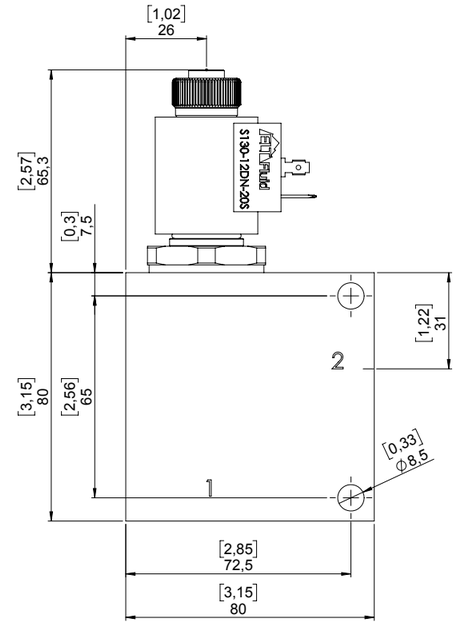

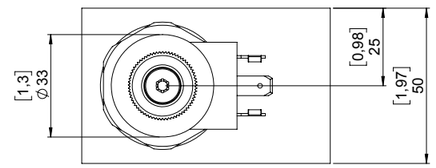

STANDARD HOUSING

Ordering code:	See page 9.07.002
Material:*	Aluminium/Steel Max working pressure for aluminum body: 210 bar Max working pressure for steel body: 350 bar

**Note:* To correctly select the material, in relation to application, see page S.003.

Ordering code

E13N-21 - -

Seals
- None (std. NBR)
- **Y**- Polyurethane
- For other options contact Sales dept.

*Options**
- None (std. without override)
- **P**- Push
- **PT**- Push and twist
- **SV**- Screw in

Connector
- **DN**- Din
- **DU**- Deutsch
- **AM**- Amp Junior

Voltage
- None (std. without coil)
- **12**- Vdc
- **24**- Vdc

Material std. housing
- **A**- Aluminium
- **S**- Steel

Housing size ports
- None (std. only cartridge)
- **5B** - 3/4" BSP
- **6B**- 1" BSP

**Note:* Information about manual override is available at page S.001

E13N-22

Solenoid valve 2 ways 2 positions, pilot poppet opereated, normally closed

Description

Electric cartridge valve on/off designed to hold the load or block flow at high pressure application, where low leakage is requested.

Operation mode

COIL NOT POWERED: the valve in closed position blocks the flow from 2 to 1.
COIL POWERED: the valve allows flow in both directions.
From 2 to 1 and from 1 to 2.

GENERAL DATA

Weight without coil: 0,38 Kg (0,84 lbs).
Ambient temperature range: -30 °C a 60 °C with standard seals (NBR).
Max. proof pressure: 420 bar (6.090 psi).
Flow Max: 110 l/min (29 gpm).
Cartridge materials: high strength steel, internal parts hardened and grinding.

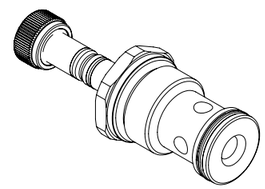

Drawing

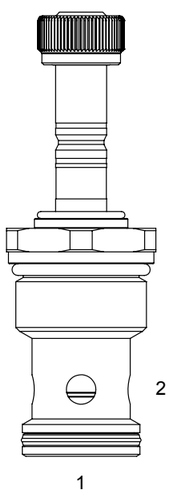

Hydraulic symbol

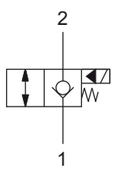

Pressure drop

Oil viscosity: 46 cSt (217 SSU) Fluid temperature: 40 °C

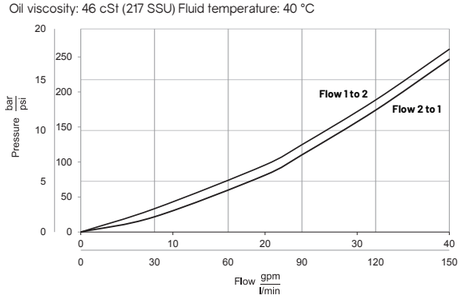

TECHNICAL DATA

HYDRAULIC

Max. working pressure:	350 bar (5.075 psi)
Flow rate:	min 5 l/min (1,3 gpm) max 110 l/min (29 gpm)
Fluid: *Viscosity:*	Mineral based oil From 15cSt to 250 cSt
Leakage:	0,25 cc/min (5 drops/min) P max. 350 bar (5.075 psi)
Standard seals:	O-ring NBR Seals Poliurethane
Cavity:	GCZ1320
Installation torque:	80 Nm
Coil nut torque:	2 Nm
Max contamination level:	NAS 8 ISO 4406 19/17/14
Fluid temperature range:	From -20 to +80 °C
Fatigue cycle life:	1.000.000 cycle at 350 bar
Seal kit std.:	5AG0031

ELECTRIC

Type of voltage:	DC
Insulation index:	H
Nominal voltage:	+/- 10 %
Power at 20 °C:	20,5 W
ED:*	100% with ambient temperature range -20 °C +40 °C
Coil code: *(see page 9.01.002)*	S130-20S

**Note:* For temperature or special conditions contact our sales department.

E13N-22

Inches
Millimeters

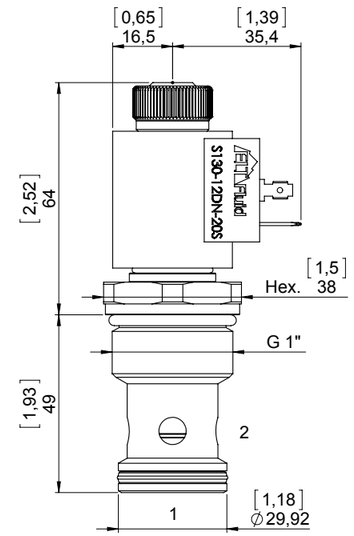

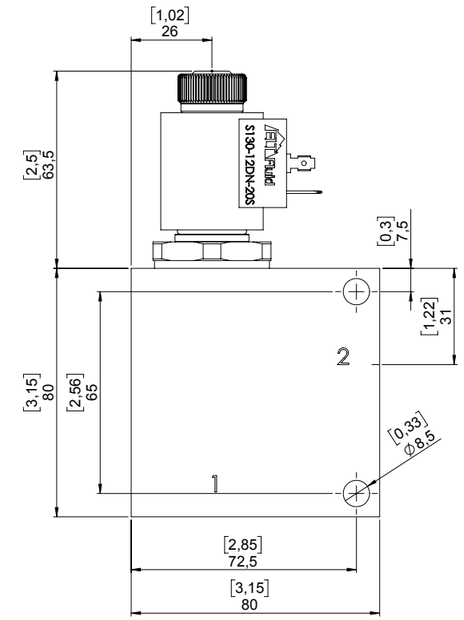

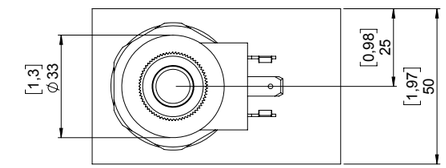

STANDARD HOUSING

Ordering code:	See page 9.07.002
Material:*	Aluminium/Steel Max working pressure for aluminum body: 210 bar Max working pressure for steel body: 350 bar

**Note:* To correctly select the material, in relation to application, see page S.003.

Ordering code

E13N-22 - -

Seals
- None (std. NBR)
- **Y**- Polyurethane
- For other options contact Sales dept.

*Options**
- None (std. without override)
- **S**- Screw out

Connector
- **DN**- Din
- **DU**- Deutsch
- **AM**- Amp Junior

Voltage
- None (std. without coil)
- **12**- Vdc
- **24**- Vdc

Material std. housing
- **A**- Aluminium
- **S**- Steel

Housing size ports
- None (std. only cartridge)
- **5B** - 3/4" BSP
- **6B**- 1" BSP

**Note:* Information about manual override is available at page S.001

E13N-23

Solenoid valve 2 ways 2 positions, pilot poppet opereated, normally open

Description

Electric cartridge valve on/off designed to hold the load or block flow at high pressure application, where low leakage is requested.

Operation mode

COIL NOT POWERED: the valve allows flow in both directions.
From 2 to 1 and from 1 to 2.
COIL POWERED: the valve in closed position blocks the flow from 2 to 1.

GENERAL DATA

Weight without coil: 0,38 Kg (0,84 lbs).
Ambient temperature range: -30 °c a 60 °C with standard seals (NBR).
Max. proof pressure: 420 bar (6.090 psi).
Flow Max: 110 l/min (29 gpm).
Cartridge materials: high strength steel, internal parts hardened and grinding.

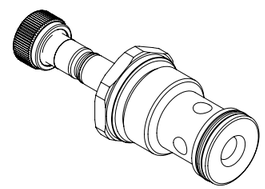

Drawing

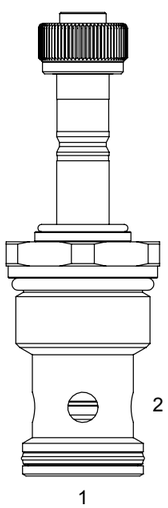

Hydraulic symbol

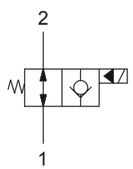

Pressure drop

Oil viscosity: 46 cSt (217 SSU) Fluid temperature: 40 °C

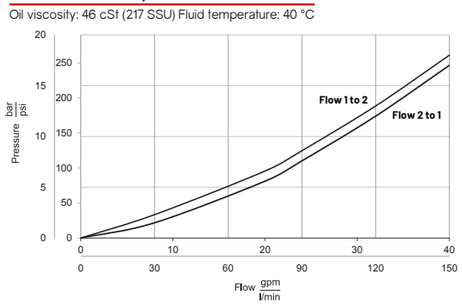

TECHNICAL DATA

HYDRAULIC

Max. working pressure:	350 bar (5.075 psi)
Flow rate:	min 5 l/min (1,3 gpm) max 110 l/min (29 gpm)
Fluid: *Viscosity:*	Mineral based oil From 15cSt to 250 cSt
Leakage:	0,25 cc/min (5 drops/min) P max. 350 bar (5.075 psi)
Standard seals:	O-ring NBR Seals Poliurethane
Cavity:	GCZ1320
Installation torque:	80 Nm
Coil nut torque:	2 Nm
Max contamination level:	NAS 8 ISO 4406 19/17/14
Fluid temperature range:	From -20 to +80 °C
Fatigue cycle life:	1.000.000 cycle at 350 bar
Seal kit std.:	5AG0031

ELECTRIC

Type of voltage:	DC
Insulation index:	H
Nominal voltage:	+/- 10 %
Power at 20 °C:	20,5 W
ED:*	100% with ambient temperature range -20 °C +40 °C
Coil code: *(see page 9.01.002)*	S130-20S

**Note:* For temperature or special conditions contact our sales department.

E13N-23

Inches
Millimeters

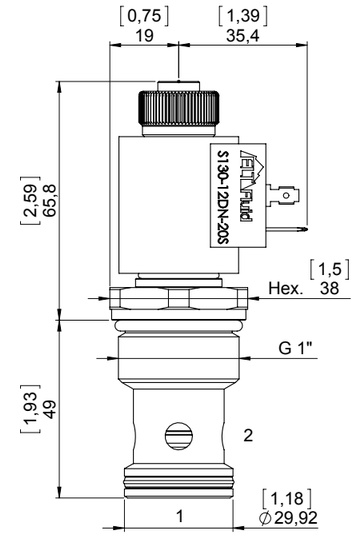

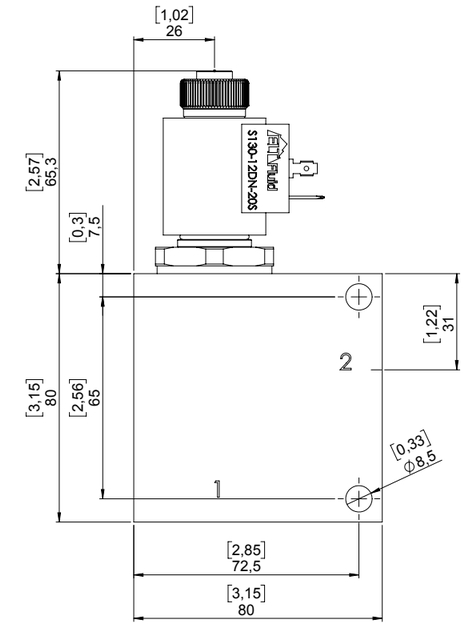

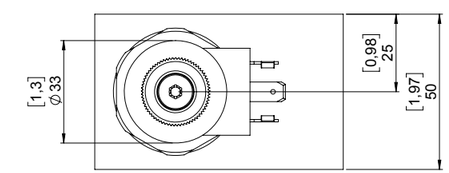

STANDARD HOUSING

Ordering code:	See page 9.07.002
Material:*	Aluminium/Steel Max working pressure for aluminum body: 210 bar Max working pressure for steel body: 350 bar

**Note:* To correctly select the material, in relation to application, see page S.003.

Ordering code

E13N-23 - -

Seals
- None (std. NBR)
- **Y**- Polyurethane
- For other options contact Sales dept.

*Options**
- None (std. without override)
- **P**- Push
- **PT**- Push and twist
- **SV**- Screw in

Connector
- **DN**- Din
- **DU**- Deutsch
- **AM**- Amp Junior

Voltage
- None (std. without coil)
- **12**- Vdc
- **24**- Vdc

Material std. housing
- **A**- Aluminium
- **S**- Steel

Housing size ports
- None (std. only cartridge)
- **5B** - 3/4" BSP
- **6B**- 1" BSP

**Note:* Information about manual override is available at page S.001

E13N-24

Solenoid valve 2 ways 2 positions, pilot poppet opereated, normally closed

Description

Electric cartridge valve on/off designed to hold the load or block flow at high pressure application, where low leakage is requested.

Operation mode

COIL NOT POWERED: the valve in closed position blocks the flow from 1 to 2.
COIL POWERED: the valve allows flow from 1 to 2.

GENERAL DATA

Weight without coil: 0,38 Kg (0,84 lbs).
Ambient temperature range: -30 °C a 60 °C with standard seals (NBR).
Max. proof pressure: 420 bar (6.090 psi).
Flow Max: 110 l/min (29 gpm).
Cartridge materials: high strength steel, internal parts hardened and grinding.

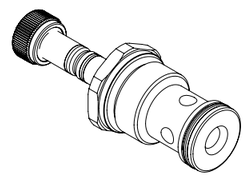

Drawing

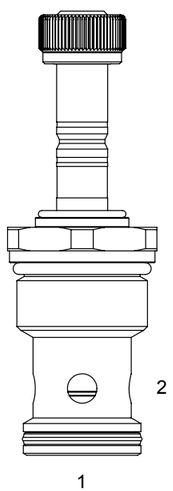

Hydraulic symbol

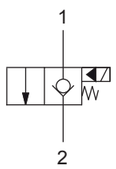

Pressure drop

Oil viscosity: 46 cSt (217 SSU) Fluid temperature: 40 °C

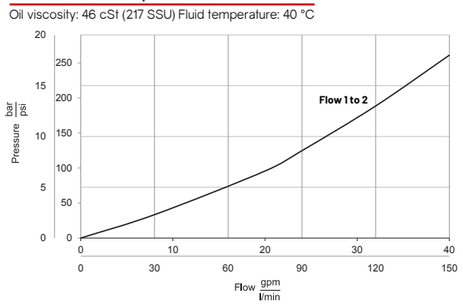

TECHNICAL DATA

HYDRAULIC	
Max. working pressure:	350 bar (5.075 psi)
Flow rate:	min 5 l/min (1,3 gpm) max 110 l/min (29 gpm)
Fluid: *Viscosity:*	Mineral based oil From 15cSt to 250 cSt
Leakage:	0,25 cc/min (5 drops/min) P max. 350 bar (5.075 psi)
Standard seals:	O-ring NBR Seals Poliurethane
Cavity:	GCZ1320
Installation torque:	80 Nm
Coil nut torque:	2 Nm
Max contamination level:	NAS 8 ISO 4406 19/17/14
Fluid temperature range:	From -20 to +80 °C
Fatigue cycle life:	1.000.000 cycle at 350 bar
Seal kit std.:	5AG0031
ELECTRIC	
Type of voltage:	DC
Insulation index:	H
Nominal voltage:	+/- 10 %
Power at 20 °C:	20,5 W
ED:*	100% with ambient temperature range -20 C° +40 °C
Coil code: *(see page 9.01.002)*	S130-20S

**Note:* For temperature or special conditions contact our sales department.

E13N-24

Inches
Millimeters

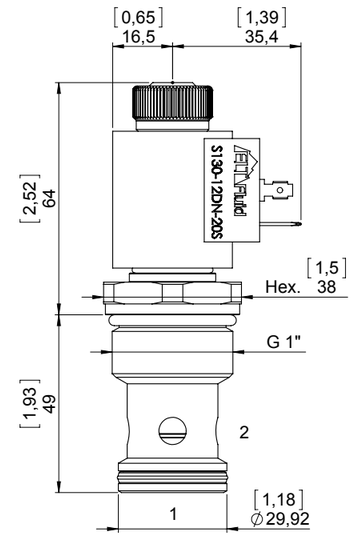

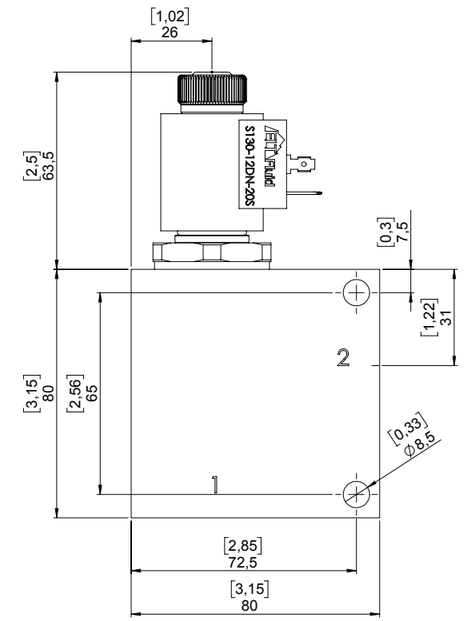

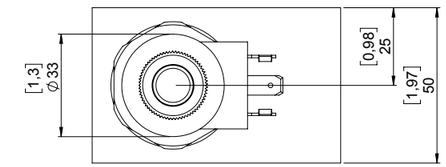

STANDARD HOUSING

Ordering code:	See page 9.07.002
Material:*	Aluminium/Steel Max working pressure for aluminum body: 210 bar Max working pressure for steel body: 350 bar

**Note:* To correctly select the material, in relation to application, see page S.003.

Ordering code

E13N-24 - -

Seals
- None (std. NBR)
- **Y**- Polyurethane
- For other options contact Sales dept.

*Options**
- None (std. without override)
- **S**- Screw out

Connector
- **DN**- Din
- **DU**- Deutsch
- **AM**- Amp Junior

Voltage
- None (std. without coil)
- **12**- Vdc
- **24**- Vdc

Material std. housing
- **A**- Aluminium
- **S**- Steel

Housing size ports
- None (std. only cartridge)
- **5B** - 3/4" BSP
- **6B**- 1" BSP

**Note:* Information about manual override is available at page S.001

E13N-25

Solenoid valve 2 ways 2 positions, pilot poppet opereated, normally open

Description

Electric cartridge valve on/off designed to hold the load or block flow at high pressure application, where low leakage is requested.

Operation mode

COIL NOT POWERED: the valve allows flow from 1 to 2.
COIL POWERED: the valve in closed position blocks the flow from 1 to 2.

GENERAL DATA

Weight without coil: 0,38 Kg (0,84 lbs).
Ambient temperature range: -30 °C a 60 °C with standard seals (NBR).
Max. proof pressure: 420 bar (6.090 psi).
Flow Max: 110 l/min (29 gpm).
Cartridge materials: high strength steel, internal parts hardened and grinding.

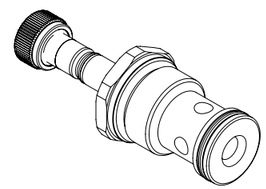

Drawing

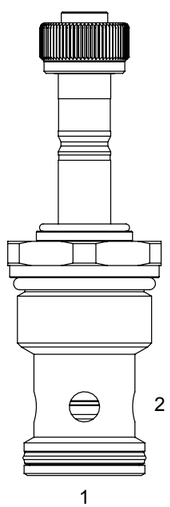

Hydraulic symbol

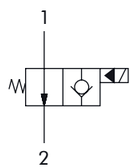

Pressure drop

Oil viscosity: 46 cSt (217 SSU) Fluid temperature: 40 °C

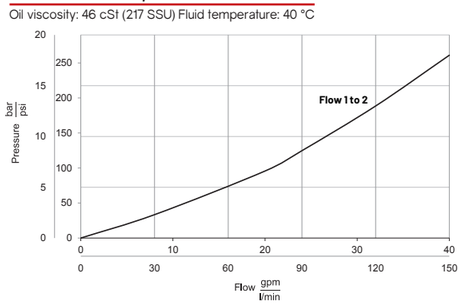

TECHNICAL DATA

HYDRAULIC

Max. working pressure:	350 bar (5.075 psi)
Flow rate:	min 5 l/min (1,3 gpm) max 110 l/min (29 gpm)
Fluid: *Viscosity:*	Mineral based oil From 15cSt to 250 cSt
Leakage:	0,25 cc/min (5 drops/min) P max. 350 bar (5.075 psi)
Standard seals:	O-ring NBR Seals Poliurethane
Cavity:	GCZ1320
Installation torque:	80 Nm
Coil nut torque:	2 Nm
Max contamination level:	NAS 8 ISO 4406 19/17/14
Fluid temperature range:	From -20 to +80 °C
Fatigue cycle life:	1.000.000 cycle at 350 bar
Seal kit std.:	5AG0031

ELECTRIC

Type of voltage:	DC
Insulation index:	H
Nominal voltage:	+/- 10 %
Power at 20 °C:	20,5 W
ED:*	100% with ambient temperature range -20 °C +40 °C
Coil code: *(see page 9.01.002)*	S130-20S

**Note:* For temperature or special conditions contact our sales department.

E13N-25

Inches
Millimeters

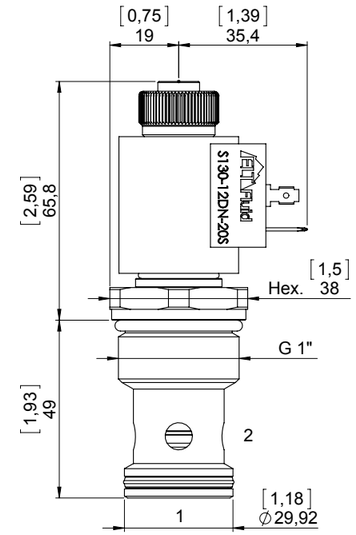

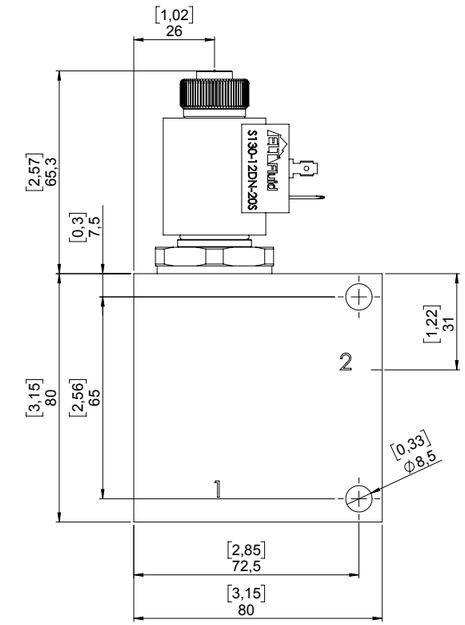

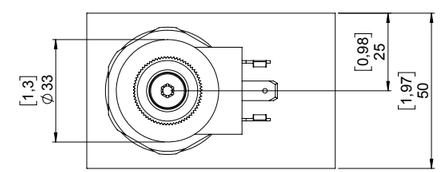

STANDARD HOUSING

Ordering code:	See page 9.07.002
Material:*	Aluminium/Steel Max working pressure for aluminum body: 210 bar Max working pressure for steel body: 350 bar

**Note:* To correctly select the material, in relation to application, see page S.003.

Ordering code

E13N-25 - -

Seals
- None (std. NBR)
- **Y**- Polyurethane
- For other options contact Sales dept.

*Options**
- None (std. without override)
- **P**- Push
- **PT**- Push and twist
- **SV**- Screw in

Connector
- **DN**- Din
- **DU**- Deutsch
- **AM**- Amp Junior

Voltage
- None (std. without coil)
- **12**- Vdc
- **24**- Vdc

Material std. housing
- **A**- Aluminium
- **S**- Steel

Housing size ports
- None (std. only cartridge)
- **5B** - 3/4" BSP
- **6B**- 1" BSP

**Note:* Information about manual override is available at page S.001

E13N-26

Solenoid valve 2 ways 2 positions, pilot poppet opereated, normally closed

Description

Electric cartridge valve on/off designed to hold the load or block flow at high pressure application, where low leakage is requested.

Operation mode

COIL NOT POWERED: the valve in closed position blocks the flow from 1 to 2.
COIL POWERED: the valve allows flow in both directions.
From 1 to 2 and from 2 to 1.

GENERAL DATA

Weight without coil: 0,38 Kg (0,84 lbs).
Ambient temperature range: -30 °C a 60 °C with standard seals (NBR).
Max. proof pressure: 420 bar (6.090 psi).
Flow Max: 110 l/min (29 gpm).
Cartridge materials: high strength steel, internal parts hardened and grinding.

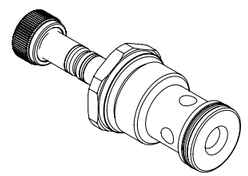

Drawing

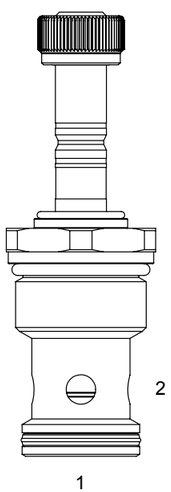

Hydraulic symbol

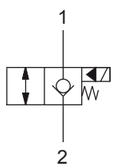

Pressure drop

Oil viscosity: 46 cSt (217 SSU) Fluid temperature: 40 °C

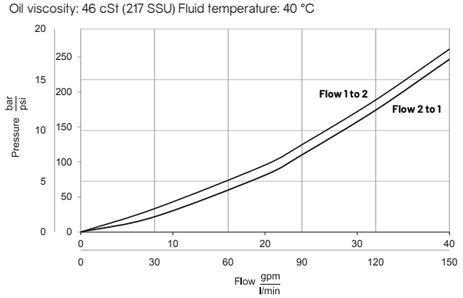

TECHNICAL DATA

HYDRAULIC	
Max. working pressure:	350 bar (5.075 psi)
Flow rate:	min 5 l/min (1,3 gpm) max 110 l/min (29 gpm)
Fluid: *Viscosity:*	Mineral based oil From 15cSt to 250 cSt
Leakage:	0,25 cc/min (5 drops/min) P max. 350 bar (5.075 psi)
Standard seals:	O-ring NBR Seals Poliurethane
Cavity:	GCZ1320
Installation torque:	80 Nm
Coil nut torque:	2 Nm
Max contamination level:	NAS 8 ISO 4406 19/17/14
Fluid temperature range:	From -20 to +80 °C
Fatigue cycle life:	1.000.000 cycle at 350 bar
Seal kit std.:	K132N00
ELECTRIC	
Type of voltage:	DC
Insulation index:	H
Nominal voltage:	+/- 10 %
Power at 20 °C:	20,5 W
ED:*	100% with ambient temperature range -20 °C +40 °C
Coil code: *(see page 9.01.002)*	S130-20S

Note: For temperature or special conditions contact our sales department.

E13N-26

Inches
Millimeters

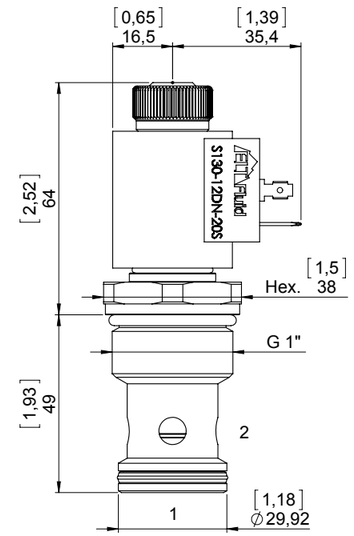

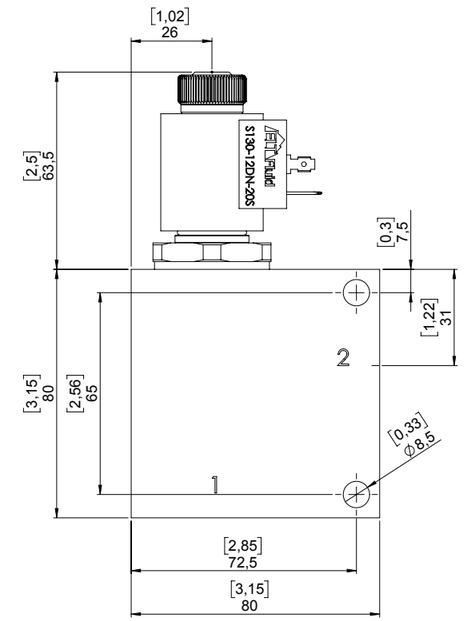

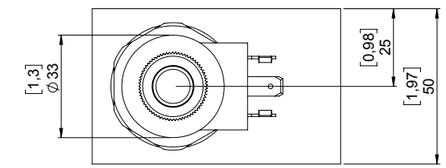

STANDARD HOUSING

Ordering code:	See page 9.07.002
Material:*	Aluminium/Steel Max working pressure for aluminum body: 210 bar Max working pressure for steel body: 350 bar

Note: To correctly select the material, in relation to application, see page S.003.

Ordering code

E13N-26 - -

Seals
- None (std. NBR)
- **Y**- Polyurethane
- For other options contact Sales dept.

*Options**
- None (std. without override)
- **S**- Screw out

Connector
- **DN**- Din
- **DU**- Deutsch
- **AM**- Amp Junior

Voltage
- None (std. without coil)
- **12**- Vdc
- **24**- Vdc

Material std. housing
- **A**- Aluminium
- **S**- Steel

Housing size ports
- None (std. only cartridge)
- **5B** - 3/4" BSP
- **6B**- 1" BSP

Note: Information about manual override is available at page S.001

E13N-27

Solenoid valve 2 ways 2 positions,
pilot poppet opereated, normally open

Description

Electric cartridge valve on/off designed to hold the load or block flow at high pressure application where low leakage is requested.

Operation mode

COIL NOT POWERED: when is not energized the coil, the valve allow flow in both directions.
From 1 to 2 and 2 to 1.
COIL POWERED: when is energized the coil, this valve block flow from 1 to 2 causing close position.

GENERAL DATA

Weight without coil: 0,38 Kg (0,84 lbs).
Ambient temperature range: -30 °C a 60 °C with standard seals (NBR).
Max. proof pressure: 420 bar (6.090 psi).
Flow Max: 110 l/min (29 gpm).
Cartridge materials: high strength steel, internal parts hardened and grinding.

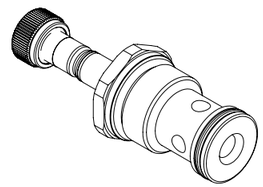

Drawing

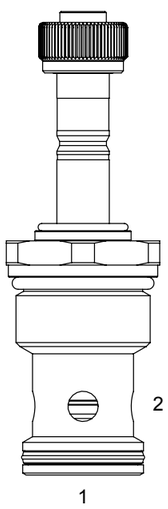

Hydraulic symbol

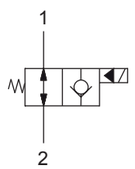

Pressure drop

Oil viscosity: 46 cSt (217 SSU) Fluid temperature: 40 °C

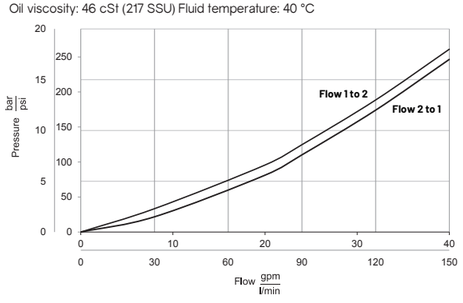

TECHNICAL DATA

HYDRAULIC	
Max. working pressure:	350 bar (5.075 psi)
Flow rate:	min 5 l/min (1,3 gpm) max 110 l/min (29 gpm)
Fluid: *Viscosity:*	Mineral based oil From 15cSt to 250 cSt
Leakage:	0,25 cc/min (5 drops/min) P max. 350 bar (5.075 psi)
Standard seals:	O-ring NBR Seals Poliurethane
Cavity:	GCZ1320
Installation torque:	80 Nm
Coil nut torque:	2 Nm
Max contamination level:	NAS 8 ISO 4406 19/17/14
Fluid temperature range:	From -20 to +80 °C
Fatigue cycle life:	1.000.000 cycle at 350 bar
Seal kit std.:	5AG0031
ELECTRIC	
Type of voltage:	DC
Insulation index:	H
Nominal voltage:	+/- 10 %
Power at 20 °C:	20,5 W
ED:*	100% with ambient temperature range -20 °C +40 °C
Coil code: *(see page 9.01.002)*	S130-20S

**Note:* For temperature or special conditions contact our sales department.

Inches
Millimeters

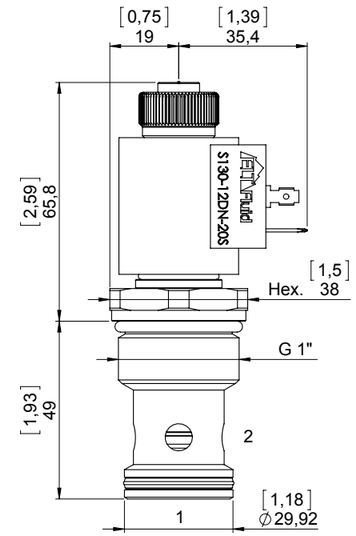

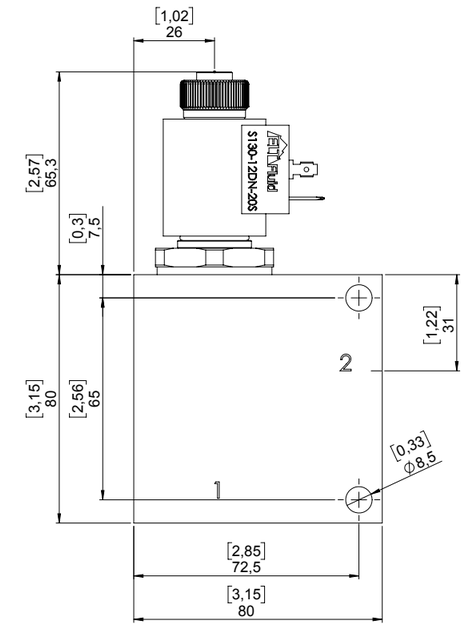

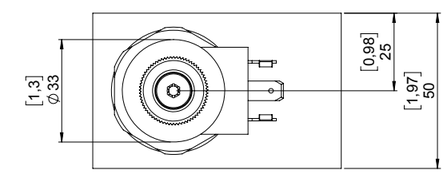

STANDARD HOUSING

Ordering code:	See page 9.07.002
Material:*	Aluminium/Steel Max working pressure for aluminum body: 210 bar Max working pressure for steel body: 350 bar

**Note:* To correctly select the material, in relation to application, see page S.003.

Ordering code

E13N-27 - -

Seals
- None (std. NBR)
- **Y**- Polyurethane
- For other options contact Sales dept.

*Options**
- None (std. without override)
- **P**- Push
- **PT**- Push and twist
- **SV**- Screw in

Connector
- **DN**- Din
- **DU**- Deutsch
- **AM**- Amp Junior

Voltage
- None (std. without coil)
- **12**- Vdc
- **24**- Vdc

Material std. housing
- **A**- Aluminium
- **S**- Steel

Housing size ports
- None (std. only cartridge)
- **5B** - 3/4" BSP
- **6B**- 1" BSP

**Note:* Information about manual override is available at page S.001

E13N-28

Solenoid valve 2 ways 2 positions, pilot poppet opereated, normally closed

Description

Electric cartridge valve on/off designed to hold the load or block flow at high pressure application, where low leakage is requested.

Operation mode

COIL NOT POWERED: the valve in closed position blocks flow in both direction. From 2 to 1 and 1 to 2.
COIL POWERED: the valve allows flow in both directions.
From 2 to 1 and from 1 to 2.

GENERAL DATA

Weight without coil: 0,38 Kg (0,84 lbs).
Ambient temperature range: -30 °C a 60 °C with standard seals (NBR).
Max. proof pressure: 420 bar (6.090 psi).
Flow Max: 110 l/min (29 gpm).
Cartridge materials: high strength steel, internal parts hardened and grinding.

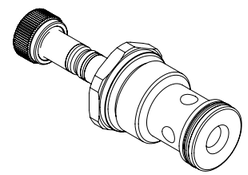

Drawing

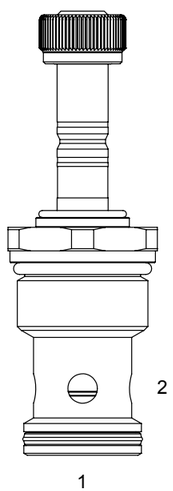

Hydraulic symbol

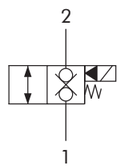

Pressure drop

Oil viscosity: 46 cSt (217 SSU) Fluid temperature: 40 °C

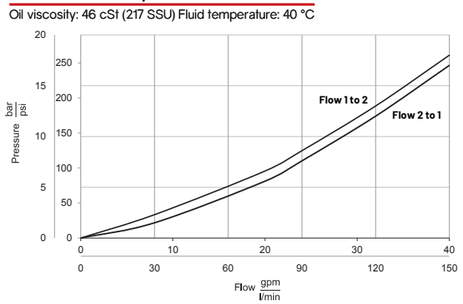

TECHNICAL DATA

HYDRAULIC

Max. working pressure:	350 bar (5.075 psi)
Flow rate:	min 5 l/min (1,3 gpm) max 110 l/min (29 gpm)
Fluid: *Viscosity:*	Mineral based oil From 15cSt to 250 cSt
Leakage:	0,25 cc/min (5 drops/min) P max. 350 bar (5.075 psi)
Standard seals:	O-ring NBR Seals Poliurethane
Cavity:	GCZ1320
Installation torque:	80 Nm
Coil nut torque:	2 Nm
Max contamination level:	NAS 8 ISO 4406 19/17/14
Fluid temperature range:	From -20 to +80 °C
Fatigue cycle life:	1.000.000 cycle at 350 bar
Seal kit std.:	5AG0031

ELECTRIC

Type of voltage:	DC
Insulation index:	H
Nominal voltage:	+/- 10 %
Power at 20 °C:	20,5 W
ED:*	100% with ambient temperature range -20 °C +40 °C
Coil code: *(see page 9.01.002)*	S130-20S

**Note:* For temperature or special conditions contact our sales department.

E13N-28

Inches
Millimeters

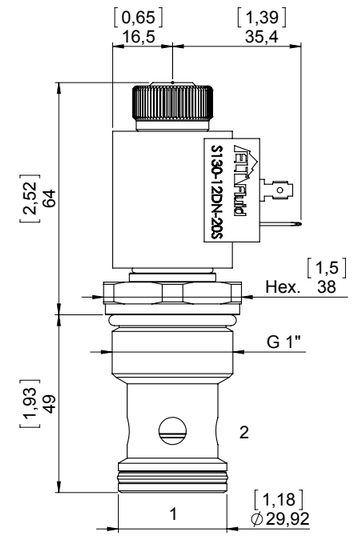

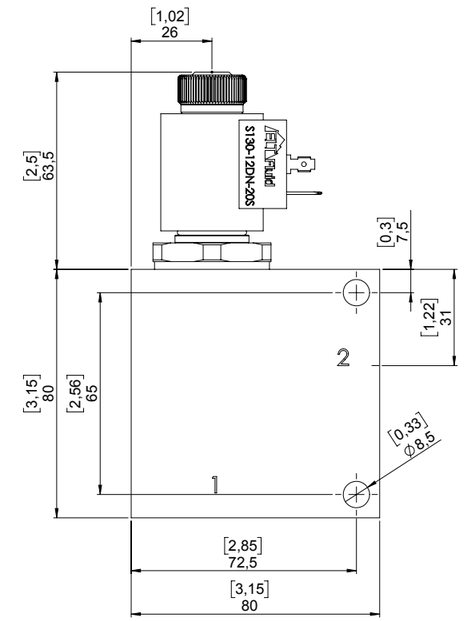

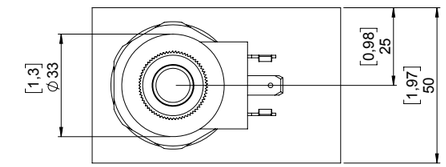

STANDARD HOUSING

Ordering code:	See page 9.07.002
Material:*	Aluminium/Steel Max working pressure for aluminum body: 210 bar Max working pressure for steel body: 350 bar

**Note:* To correctly select the material, in relation to application, see page S.003.

Ordering code

E13N-28 - -

Seals
- None (std. NBR+Polyurethane)
- **Y**- Polyurethane
- For other options contact Sales dept.

*Options**
- None (std. without override)
- **S**- Screw out

Connector
- **DN**- Din
- **DU**- Deutsch
- **AM**- Amp Junior

Voltage
- None (std. without coil)
- **12**- Vdc
- **24**- Vdc

Material std. housing
- **A**- Aluminium
- **S**- Steel

Housing size ports
- None (std. only cartridge)
- **5B** - 3/4" BSP
- **6B**- 1" BSP

**Note:* Information about manual override is available at page S.001

E13N-29

Solenoid valve 2 ways 2 positions,
pilot poppet opereated, normally open

Description

Cartridge valve on/off electric valve designed to hold the load or block flow in application where low leakage is requested at high pressure.

Operation mode

COIL NOT POWERED: when is not energized the coil, the valve allow flow in both directions. From 2 to 1 and 1 to 2.
COIL POWERED: when is energized the coil, this valve block flow in both directions. From 2 to 1 and 1 to 2 causing close position.

GENERAL DATA

Weight without coil: 0,38 Kg (0,84 lbs).
Ambient temperature range: -30 °C a 60 °C with standard seals (NBR).
Max. proof pressure: 420 bar (6.090 psi).
Flow Max: 110 l/min (29 gpm).
Cartridge materials: high strength steel, internal parts hardened and ground.

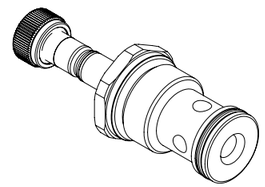

Drawing

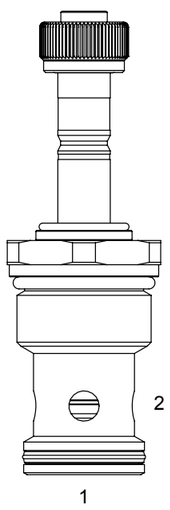

Hydraulic symbol

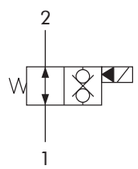

Pressure drop

Oil viscosity: 46 cSt (217 SSU) Fluid temperature: 40 °C

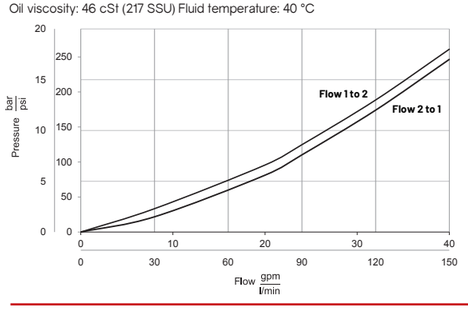

TECHNICAL DATA

HYDRAULIC	
Max. working pressure:	350 bar (5.075 psi)
Flow rate:	min 5 l/min (1,3 gpm) max 110 l/min (29 gpm)
Fluid: *Viscosity:*	Mineral based oil From 15cSt to 250 cSt
Leakage:	0,5 cc/min (10 drops/min) P max. 350 bar (5.075 psi)
Standard seals:	O-ring NBR Seals Poliurethane
Cavity:	GCZ1320
Installation torque:	80 Nm
Coil nut torque:	2 Nm
Max contamination level:	NAS 8 ISO 4406 19/17/14
Fluid temperature range:	From -20 to +80 °C
Fatigue cycle life:	1.000.000 cycle at 350 bar
Seal kit std.:	5AG0031
ELECTRIC	
Type of voltage:	DC
Insulation index:	H
Nominal voltage:	+/- 10 %
Power at 20 °C:	20,5 W
ED:*	100% with ambient temperature range -20 °C +40 °C
Coil code: *(see page 9.01.002)*	S130-20S

**Note:* For temperature or special conditions contact our sales department.

E13N-29

Inches
Millimeters

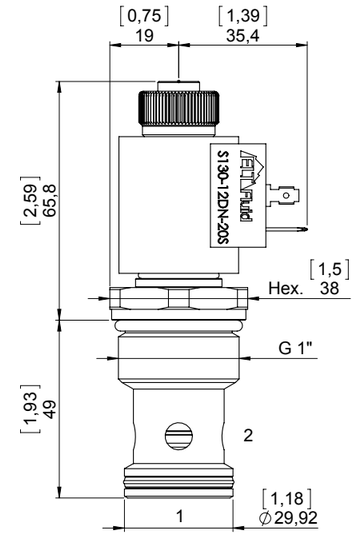

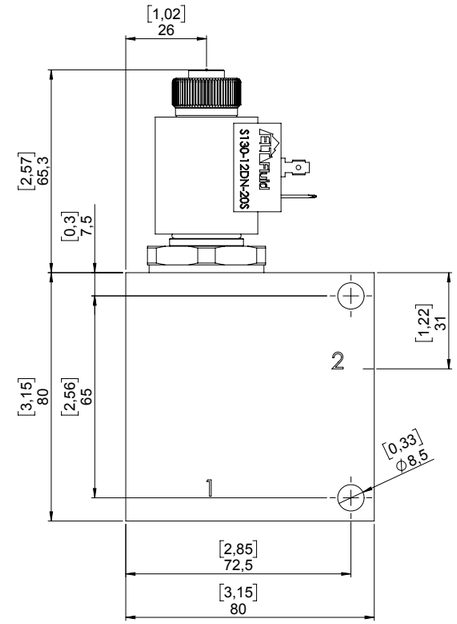

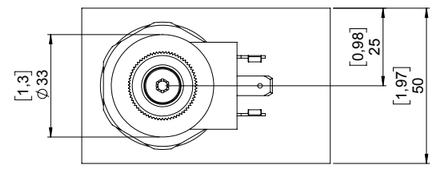

STANDARD HOUSING

Ordering code:	See page 9.07.002
Material:*	Aluminium/Steel Max working pressure for aluminum body: 210 bar Max working pressure for steel body: 350 bar

**Note:* To correctly select the material, in relation to application, see page S.003.

Ordering code

E13N-29 - -

Seals
- None (std. NBR)
- **Y**- Polyurethane
- For other options contact Sales dept.

Options*
- None (std. without override)
- **P**- Push
- **PT**- Push and twist
- **SV**- Screw in

Connector
- **DN**- Din
- **DU**- Deutsch
- **AM**- Amp Junior

Voltage
- None (std. without coil)
- **12**- Vdc
- **24**- Vdc

Material std. housing
- **A**- Aluminium
- **S**- Steel

Housing size ports
- None (std. only cartridge)
- **5B** - 3/4" BSP
- **6B**- 1" BSP

**Note:* Information about manual override is available at page S.001

E08N-22K

Solenoid valve 2 ways 2 positions, poppet direct operated, normally closed

Description

Electric cartridge valve on/off designed for the control of pilot lines and logic elements.

Operation mode

COIL NOT POWERED: the valve in closed position blocks the flow from 1 to 2.
COIL POWERED: the valve allows flow in both directions.
From 1 to 2 and from 2 to 1.

GENERAL DATA

Weight without coil: 0,14 Kg (0,31 lbs).
Ambient temperature range: -30 °C a 60 °C with standard seals (NBR).
Max. proof pressure: 420 bar (6.090 psi).
Flow Max: 2 l/min (0,5 gpm).
Cartridge materials: high strength steel, internal parts hardened and grinding.

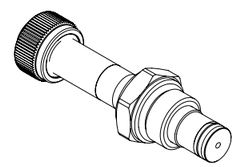

Drawing

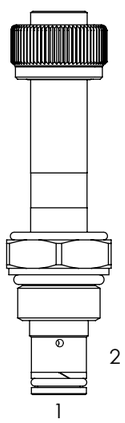

Hydraulic symbol

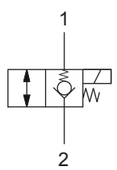

Pressure drop

Oil viscosity: 46 cSt (217 SSU) Fluid temperature: 40 °C

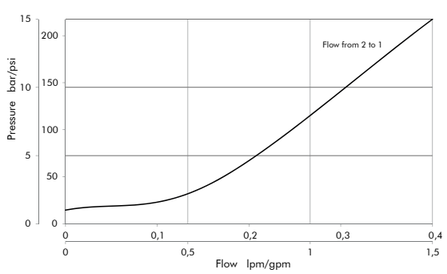

TECHNICAL DATA

HYDRAULIC

Max. working pressure:	350 bar (5.075 psi)
Flow rate:	2 l/min (0,5 gpm)
Fluid: *Viscosity:*	Mineral based oil From 15cSt to 250 cSt
Leakage:	0,25 cc/min (5 drops/min) P max. 350 bar (5.000 psi)
Standard seals:	O-ring NBR Back up ring PTFE
Cavity:	SCN0820
Installation torque:	30 Nm
Coil nut torque:	2 Nm
Max contamination level:	NAS 8 ISO 4406 19/17/14
Fluid temperature range:	From -20 °C to +80 °C
Fatigue cycle life:	1.000.000 cycle at 350 bar
Seal kit std.:	5AG0012

ELECTRIC

Type of voltage:	DC
Insulation index:	H
Nominal voltage:	+/- 10 %
Power at 20 °C:	20,5 W
ED:*	100% with ambient temperature range -20 °C +40 °C
Coil code: *(see page 9.01.002)*	S130-20S

**Note:* For temperature or special conditions contact our sales department.

E08N-22K

Inches
Millimeters

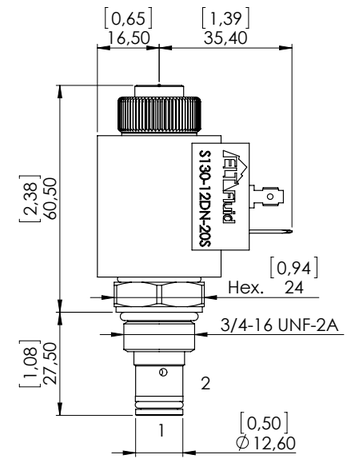

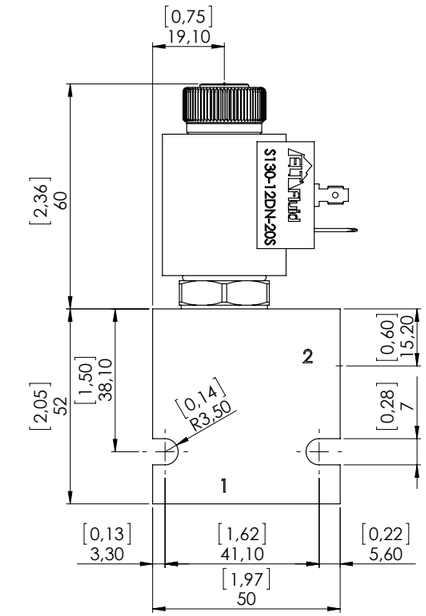

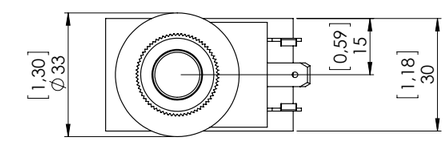

STANDARD HOUSING

Ordering code:	See page 9.02.001
Material:*	Aluminium/Steel Max working pressure for aluminum body: 210 bar Max working pressure for steel body: 350 bar

**Note:* To correctly select the material, in relation to application, see page S.003.

Ordering code

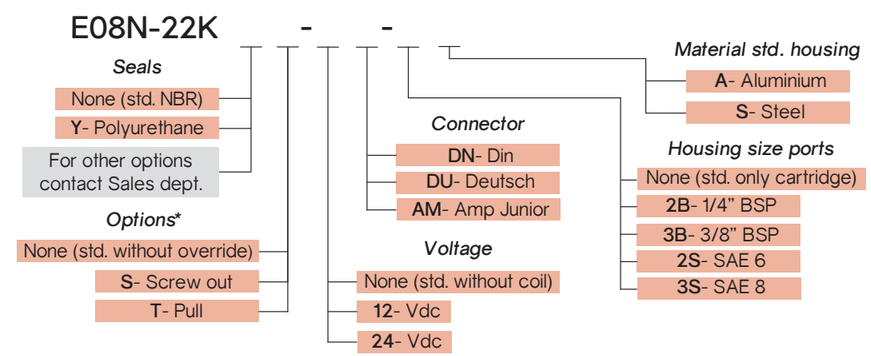

**Note:* Information about manual override is available at page S.001

E08N-23K

Solenoid valve 2 ways 2 positions, poppet direct operated , normally open

Description

Electric cartridge valve on/off designed for the control of pilot lines and logic elements.

Operation mode

COIL NOT POWERED: the valve allows flow in both directions.
From 1 to 2 and from 2 to 1.
COIL POWERED: the valve in closed position blocks the flow from 1 to 2.

GENERAL DATA

Weight without coil: 0,13 Kg (0,29 lbs).
Ambient temperature range: -30 °C a 60 °C with standard seals (NBR).
Max. proof pressure: 420 bar (6.090 psi).
Flow Max: 2 l/min (0,5 gpm).
Cartridge materials: high strength steel, internal parts hardened and grinding.

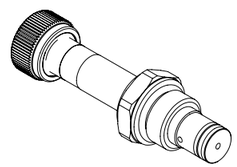

Drawing

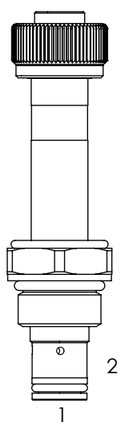

Hydraulic symbol

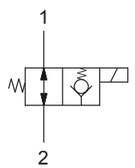

Pressure drop

Oil viscosity: 46 cSt (217 SSU) Fluid temperature: 40 °C

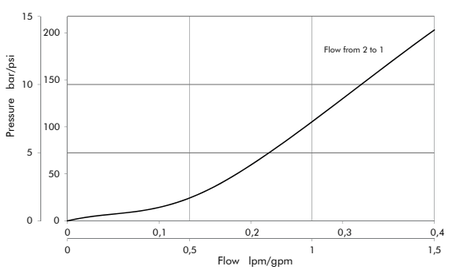

TECHNICAL DATA

HYDRAULIC

Max. working pressure:	350 bar (5.075 psi)
Flow rate:	2 l/min (0,5 gpm)
Fluid: *Viscosity:*	Mineral based oil From 15cSt to 250 cSt
Leakage:	0,25 cc/min (5 drops/min) P max. 350 bar (5.000 psi)
Standard seals:	O-ring NBR Back up ring PTFE
Cavity:	SCN0820
Installation torque:	30 Nm
Coil nut torque:	2 Nm
Max contamination level:	NAS 8 ISO 4406 19/17/14
Fluid temperature range:	From -20 °C to +80 °C
Fatigue cycle life:	1.000.000 cycle at 350 bar
Seal kit std.:	5AG0012

ELECTRIC

Type of voltage:	DC
Insulation index:	H
Nominal voltage:	+/- 10 %
Power at 20 °C:	20,5 W
ED:*	100% with ambient temperature range -20 °C +40 °C
Coil code: *(see page 9.01.002)*	S130-20S

**Note:* For temperature or special conditions contact our sales department.

E08N-23K

Inches
Millimeters

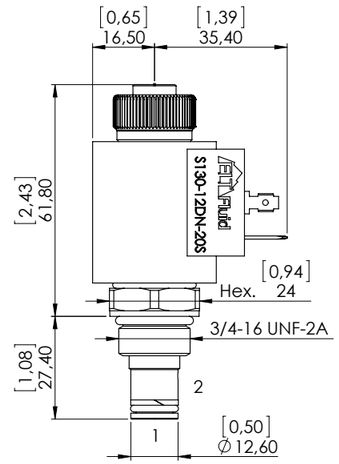

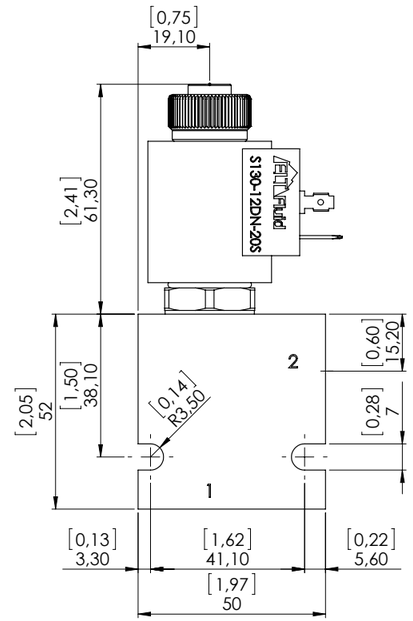

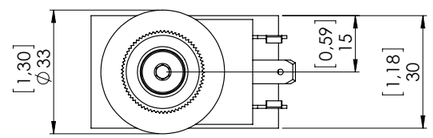

STANDARD HOUSING

Ordering code:	See page 9.02.001
Material:*	Aluminium/Steel Max working pressure for aluminum body: 210 bar Max working pressure for steel body: 350 bar

**Note:* To correctly select the material, in relation to application, see page S.003.

Ordering code

E08N-23K - -

Seals
- None (std. NBR)
- **Y**- Polyurethane
- For other options contact Sales dept.

*Options**
- None (std. without override)
- **P**- Push
- **PT**- Push and twist
- **SV**- Screw in

Connector
- **DN**- Din
- **DU**- Deutsch
- **AM**- Amp Junior

Voltage
- None (std. without coil)
- **12**- Vdc
- **24**- Vdc

Material std. housing
- **A**- Aluminium
- **S**- Steel

Housing size ports
- None (std. only cartridge)
- **2B**- 1/4" BSP
- **3B**- 3/8" BSP
- **2S**- SAE 6
- **3S**- SAE 8

**Note:* Information about manual override is available at page S.001

E08N-24K

Solenoid valve 2 ways 2 positions, poppet direct operated, normally closed

Description

Electric cartridge valve on/off designed to hold the load or block flow at high pressure application, where low leakage is requested.

Operation mode

COIL NOT POWERED: the valve in closed position blocks flow in both directions.
From 2 to 1 and 1 to 2.
COIL POWERED: the valve allows flow in both directions.
From 2 to 1 and from 1 to 2.

GENERAL DATA

Weight without coil: 0,14 Kg (0,31 lbs).
Ambient temperature range: -30 °C a 60 °C with standard seals (NBR).
Max. proof pressure: 250 bar (3.625 psi).
Flow Max: 15 l/min (4 gpm)
Cartridge materials: high strength steel, internal parts hardened and grinding.

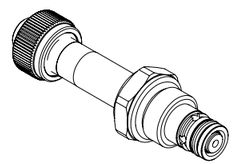

Drawing

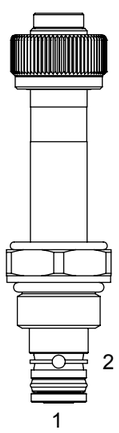

Hydraulic symbol

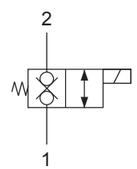

TECHNICAL DATA

HYDRAULIC	
Max. working pressure:	210 bar (3.045 psi)
Flow rate:	15 l/min (4 gpm)
Fluid: *Viscosity:*	Mineral based oil From 15cSt to 250 cSt
Leakage:	0,50 cc/min (10 drops/min) P max. 210 bar (3.045 psi)
Standard seals:	O-ring NBR Seals Polyurethane
Cavity:	SCN0820
Installation torque:	30 Nm
Coil nut torque:	2 Nm
Max contamination level:	NAS 8 ISO 4406 19/17/14
Fluid temperature range:	From -20 °C to +80 °C
Seal kit std.:	5AG0018
ELECTRIC	
Type of voltage:	DC
Insulation index:	H
Nominal voltage:	+/- 10 %
Power at 20 °C:	20,5 W
ED:*	100% with ambient temperature range -20 °C +40 °C
Coil code: *(see page 9.01.002)*	S130-20S

**Note:* For temperature or special conditions contact our sales department.

Pressure drop

Oil viscosity: 46 cSt (217 SSU) Fluid temperature: 40 °C

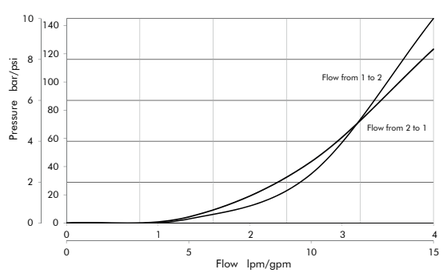

E08N-24K

Inches
Millimeters

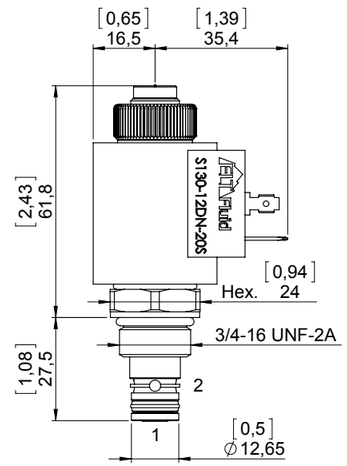

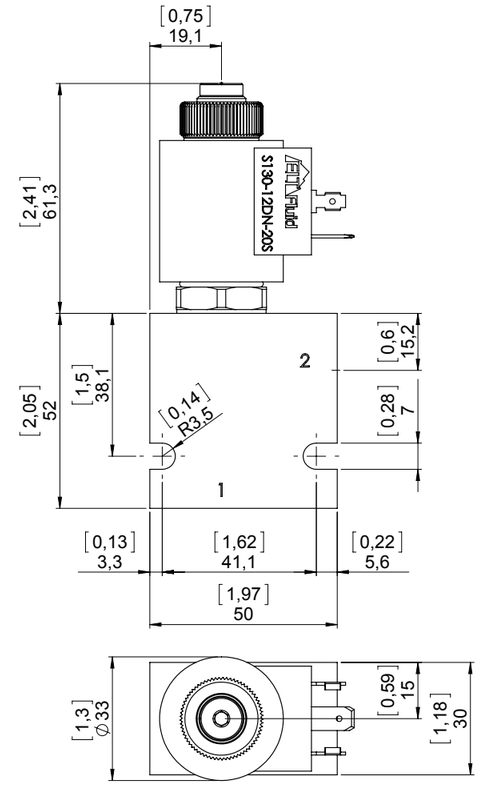

STANDARD HOUSING

Ordering code:	See page 9.02.001
Material:*	Aluminium/Steel Max working pressure for aluminum body: 210 bar Max working pressure for steel body: 350 bar

**Note:* To correctly select the material, in relation to application, see page S.003.

Ordering code

E08N-24K - - -

Seals
- None (std. NBR) + Polyurethane
- **Y**- Polyurethane
- For other options contact Sales dept.

Options*
- None (std. without override)
- **P**- Push
- **PT**- Push and twist
- **SV**- Screw in
- **EC**- Push pin

**Note:* Information about manual override is available at page S.001

Voltage
- None (std. without coil)
- **12**- Vdc
- **24**- Vdc

Screen Filter
- None (std. without filter)
- **F**- Filter

Material std. housing
- **A**- Aluminium
- **S**- Steel

Housing size ports
- None (std. only cartridge)
- **2B**- 1/4" BSP
- **3B**- 3/8" BSP
- **2S**- SAE 6
- **3S**- SAE 8

Connector
- **DN**- Din
- **DU**- Deutsch
- **AM**- Amp Junior

E08N-2S0

Electric cartridge valve on/off 2 ways 2 positions, direct acting spool, type, normally closed

Description

Electric cartridge valve on/off, 2 way 2 positions spool type normally closed, for locking flow direction.

Operation mode

COIL NOT POWERED: the valve in closed position block the flow in both direction.
COIL POWERED: the valve allows flow in both directions, from 2 to 1 and from 1 to 2.

GENERAL DATA

Weight without coil: 0,14 Kg (0,3 lbs).
Ambient temperature range: -30 °C a 60 °C with standard seals (NBR).
Max. proof pressure: 350 bar (5.075 psi).
Flow Max: 10 l/min (2,2 gpm).
Cartridge materials: high strength steel, internal parts hardened and grinding.

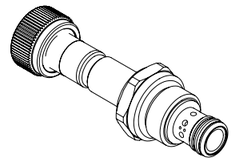

Drawing

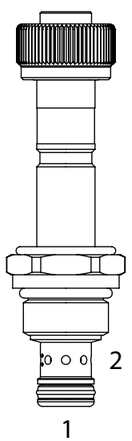

Hydraulic symbol

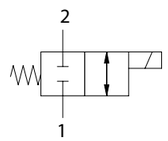

TECHNICAL DATA

HYDRAULIC	
Max. working pressure:	210 bar (3.045 psi)
Flow rate:	10 l/min (2,2 gpm)
Fluid: *Viscosity:*	Mineral based oil From 15cSt to 250 cSt
Leakage:	60 cc/min P max. 210 bar (3.045 psi)
Standard seals:	O-ring NBR Seals Polyurethane
Cavity:	SCN0820
Installation torque:	27 Nm
Coil nut torque:	2 Nm
Max contamination level:	NAS 8 ISO 4406 19/17/14
Fluid temperature range:	From -20 to +80 °C
Seal kit std.:	5AG0046
ELECTRIC	
Type of voltage:	DC
Insulation index:	H
Nominal voltage:	+/- 10 %
Power at 20 °C:	20,5 W
ED:*	100% with ambient temperature range -20 °C +40 °C
Coil code: *(see page 9.01.002)*	S130-20S

**Note:* For temperature or special conditions contact our sales department.

Pressure drop

Oil viscosity: 46 cSt (217 SSU) Fluid temperature: 40 °C

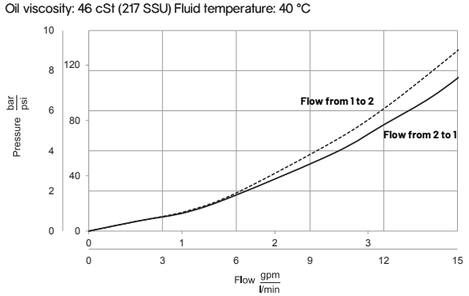

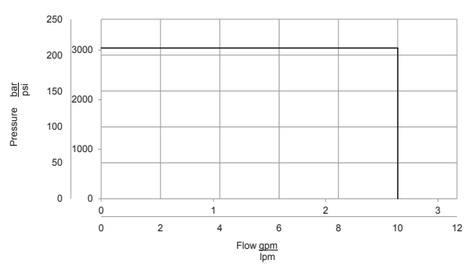

E08N-2S0

Inches
Millimeters

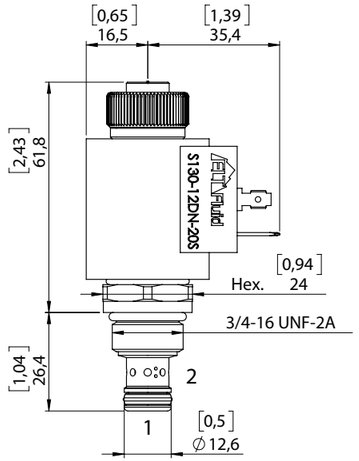

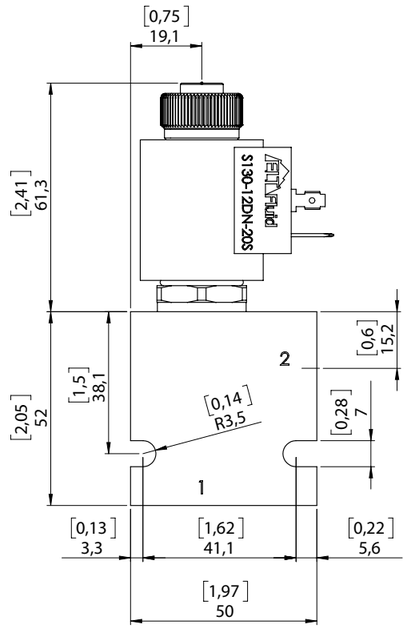

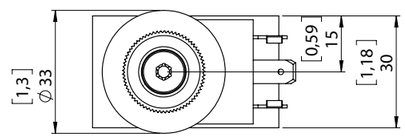

STANDARD HOUSING

Ordering code:	See page 9.02.001
Material:*	Aluminium/Steel Max working pressure for aluminum body: 210 bar Max working pressure for steel body: 350 bar

**Note:* To correctly select the material, in relation to application, see page S.003.

Ordering code

E08N-2S0 - -

Seals
- None (std. NBR+Polyurethane)
- **Y**- Polyurethane
- For other options contact Sales dept.

*Options**
- None (std. without override)
- **P**- Push
- **PT**- Push and twist
- **SV**- Screw in

Connector
- **DN**- Din
- **DU**- Deutsch
- **AM**- Amp Junior

Voltage
- None (std. without coil)
- **12**- Vdc
- **24**- Vdc

Material std. housing
- **A**- Aluminium
- **S**- Steel

Housing size ports
- None (std. only cartridge)
- **2B**- 1/4" BSP
- **3B**- 3/8" BSP
- **2S**- SAE 6
- **3S**- SAE 8

**Note:* Information about manual override is available at page S.001

E08N-2S1

Electric cartridge valve on/off, 2 ways 2 positions, direct acting, spool type, normally open

Description

Electric cartridge valve on/off, 2 way 2 positions spool type normally open, for locking flow direction.

Operation mode

COIL NOT POWERED: the valve allows flow in both directions, from 2 to 1 and from 1 to 2.
COIL POWERED: the valve in closed position blocks the flow in both directions.

GENERAL DATA

Weight without coil: 0,13 Kg (0,28 lbs).
Ambient temperature range: -30 °C a 60 °C with standard seals (NBR).
Max. proof pressure: 250 bar (3.625 psi).
Flow Max: 10 l/min (2,2 gpm).
Cartridge materials: high strength steel, internal parts hardened and grinding.

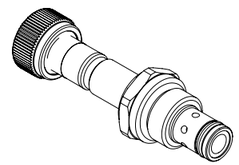

Drawing

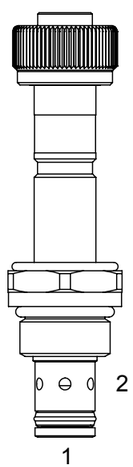

Hydraulic symbol

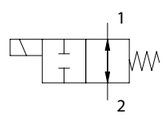

TECHNICAL DATA

HYDRAULIC

Max. working pressure:	210 bar (3.045 psi)
Flow rate:	min 10 l/min (2,2 gpm)
Fluid: *Viscosity:*	Mineral based oil From 15cSt to 250 cSt
Leakage:	60 cc/min P max. 210 bar (3.045 psi)
Standard seals:	O-ring NBR Seals Polyurethane
Cavity:	SCN0820
Installation torque:	27 Nm
Coil nut torque:	2 Nm
Max contamination level:	NAS 8 ISO 4406 19/17/14
Fluid temperature range:	From -20 to +80 °C
Seal kit std.:	5AG0018

ELECTRIC

Type of voltage:	DC
Insulation index:	H
Nominal voltage:	+/- 10 %
Power at 20 °C:	20,5 W
ED:*	100% with ambient temperature range -20 °C +40 °C
Coil code: *(see page 9.01.002)*	S130-20S

**Note:* For temperature or special conditions contact our sales department.

Pressure drop

Oil viscosity: 46 cSt (217 SSU) Fluid temperature: 40 °C

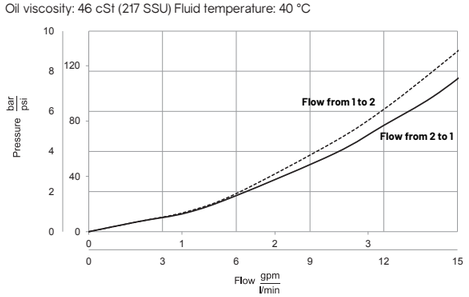

E08N-2S1

Inches
Millimeters

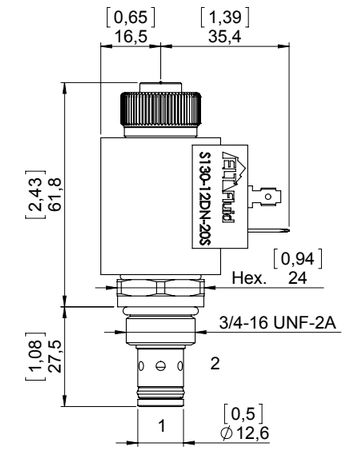

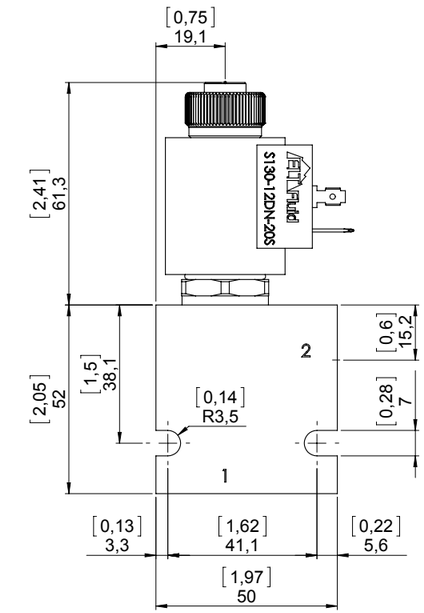

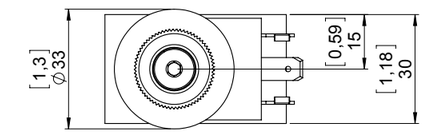

STANDARD HOUSING

Ordering code:	See page 9.02.001
Material:*	Aluminium/Steel Max working pressure for aluminum body: 210 bar Max working pressure for steel body: 350 bar

**Note:* To correctly select the material, in relation to application, see page S.003.

Ordering code

E08N-2S1 - -

Seals
- None (std. NBR+Polyurethane)
- **Y**- Polyurethane
- For other options contact Sales dept.

*Options**
- None (std. without override)
- **P**- Push
- **PT**- Push and twist
- **SV**- Screw in

Connector
- **DN**- Din
- **DU**- Deutsch
- **AM**- Amp Junior

Voltage
- None (std. without coil)
- **12**- Vdc
- **24**- Vdc

Material std. housing
- **A**- Aluminium
- **S**- Steel

Housing size ports
- None (std. only cartridge)
- **2B**- 1/4" BSP
- **3B**- 3/8" BSP
- **2S**- SAE 6
- **3S**- SAE 8

**Note:* Information about manual override is available at page S.001

E10N-2S0

Electric cartridge valve on/off, 2 ways 2 positions, direct acting spool, type, normally closed

Description

Electric cartridge valve on/off, 2 way 2 positions spool type normally closed, for locking flow direction.

Operation mode

COIL NOT POWERED: the valve in closed position block the flow in both direction.
COIL POWERED: the valve allows flow in both directions, from 2 to 1 and from 1 to 2.

GENERAL DATA

Weight without coil: 0,28 Kg (0,62 lbs).
Ambient temperature range: -30 °C a 60 °C with standard seals (NBR).
Max. proof pressure: 300 bar (4.351 psi).
Flow Max: 25 l/min (6,6 gpm).
Cartridge materials: high strength steel, internal parts hardened and grinding.

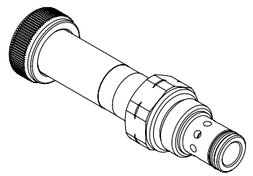

Drawing

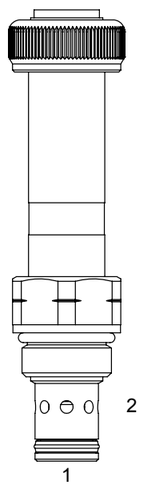

Hydraulic symbol

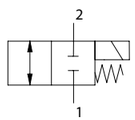

TECHNICAL DATA

HYDRAULIC	
Max. working pressure:	210 bar (3.045 psi)
Flow rate:	25 l/min (6,6 gpm)
Fluid: *Viscosity:*	Mineral based oil From 15cSt to 250 cSt
Leakage:	60 cc/min P max. 210 bar (3.045 psi)
Standard seals:	O-ring NBR Seals Polyurethane
Cavity:	SCN1020
Installation torque:	40 Nm
Coil nut torque:	2 Nm
Max contamination level:	NAS 8 ISO 4406 19/17/14
Fluid temperature range:	From -20 to +80 °C
Seal kit std.:	5AG0026
ELECTRIC	
Type of voltage:	DC
Insulation index:	H
Nominal voltage:	+/- 10 %
Power at 20 °C:	24 W
ED:*	100% with ambient temperature range -20 °C +40 °C
Coil code: *(see page 9.02.001)*	S190-24S

**Note:* For temperature or special conditions contact our sales department.

Pressure drop

Oil viscosity: 46 cSt (217 SSU) Fluid temperature: 40 °C

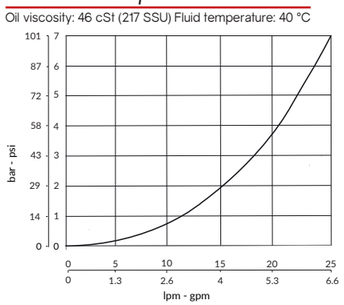

Performance graph

Oil viscosity: 46 cSt (217 SSU) Fluid temperature: 40 °C

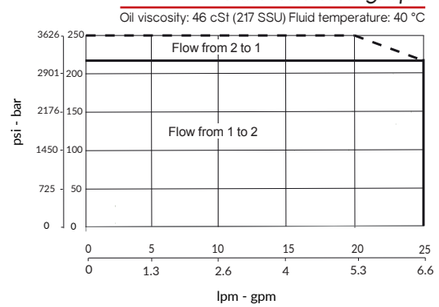

E10N-2S0

Inches
Millimeters

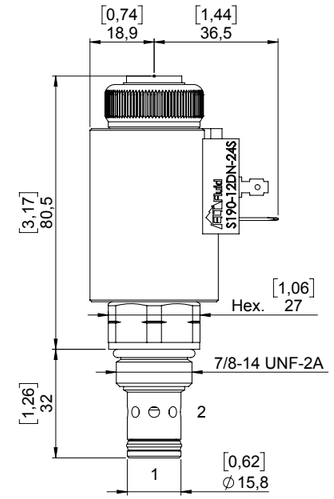

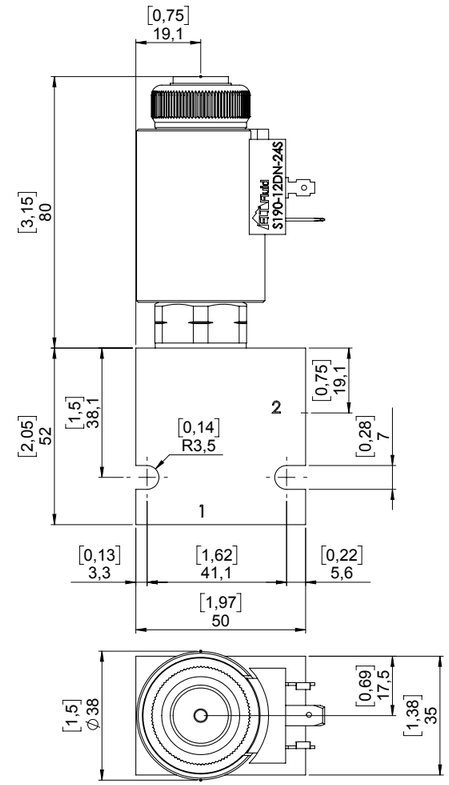

STANDARD HOUSING

Ordering code:	See page 9.03.001
Material:*	Aluminium/Steel Max working pressure for aluminum body: 210 bar Max working pressure for steel body: 350 bar

**Note:* To correctly select the material, in relation to application, see page S.003.

Ordering code

E10N-2S0 - -

Seals
- None (std. NBR+Polyurethane)
- **Y**- Polyurethane
- For other options contact Sales dept.

*Options**
- None (std. without override)
- **S**- Screw out

Connector
- **DN**- Din
- **DU**- Deutsch
- **AM**- Amp Junior

Voltage
- None (std. without coil)
- **12**- Vdc
- **24**- Vdc

Material std. housing
- **A**- Aluminium
- **S**- Steel

Housing size ports
- None (std. only cartridge)
- **3B**- 3/8" BSP
- **4B**- 1/2" BSP
- **3S**- SAE 8
- **4S**- SAE 10

**Note:* Information about manual override is available at page S.001

E10N-2S1

Electric cartridge valve on/off, 2 ways 2 positions, direct acting spool, type, normally open

Description

Electric cartridge valve on/off, 2 way 2 positions spool type normally open, for locking flow direction.

Operation mode

COIL NOT POWERED: the valve allows flow in both directions, from 2 to 1 and from 1 to 2.
COIL POWERED: the valve in closed position blocks the flow in both directions.

GENERAL DATA

Weight without coil: 0,28 Kg (0,62 lbs).
Ambient temperature range: -30 °C a 60 °C with standard seals (NBR).
Max. proof pressure: 300 bar (4.351 psi).
Flow Max: 25 l/min (6,6 gpm).
Cartridge materials: high strength steel, internal parts hardened and grinding.

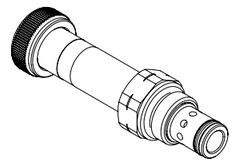

Drawing

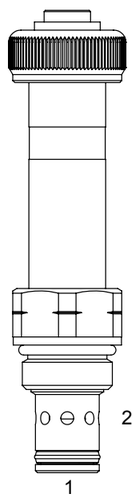

Hydraulic symbol

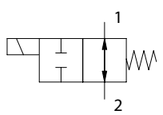

TECHNICAL DATA

HYDRAULIC

Max. working pressure:	210 bar (3.045 psi)
Flow rate:	min 25 l/min (6,6 gpm)
Fluid: *Viscosity:*	Mineral based oil From 15cSt to 250 cSt
Leakage:	60 cc/min P max. 210 bar (3.045 psi)
Standard seals:	O-ring NBR Seals Polyurethane
Cavity:	SCN1020
Installation torque:	40 Nm
Coil nut torque:	2 Nm
Max contamination level:	NAS 8 ISO 4406 19/17/14
Fluid temperature range:	From -20 to +80 °C
Seal kit std.:	5AG0026

ELECTRIC

Type of voltage:	DC
Insulation index:	H
Nominal voltage:	+/- 10 %
Power at 20 °C:	24 W
ED:*	100% with ambient temperature range -20 °C +40 °C
Coil code: *(see page 9.02.001)*	S190-24S

**Note:* For temperature or special conditions contact our sales department.

Pressure drop

Oil viscosity: 46 cSt (217 SSU) Fluid temperature: 40 °C

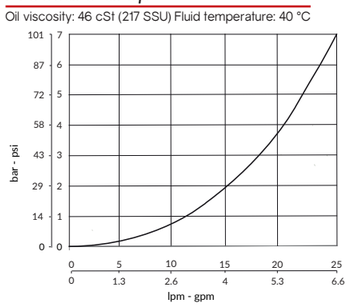

Performance graph

Oil viscosity: 46 cSt (217 SSU) Fluid temperature: 40 °C

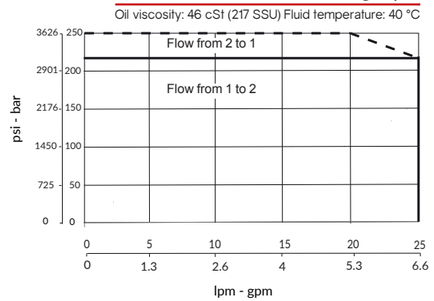

E10N-2S1

Inches
Millimeters

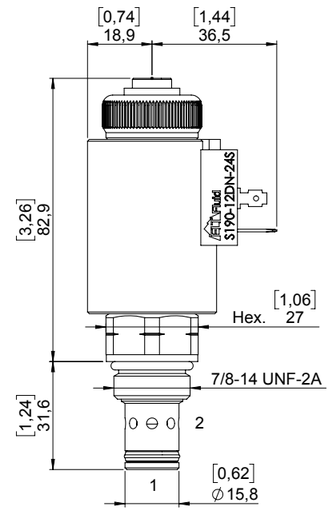

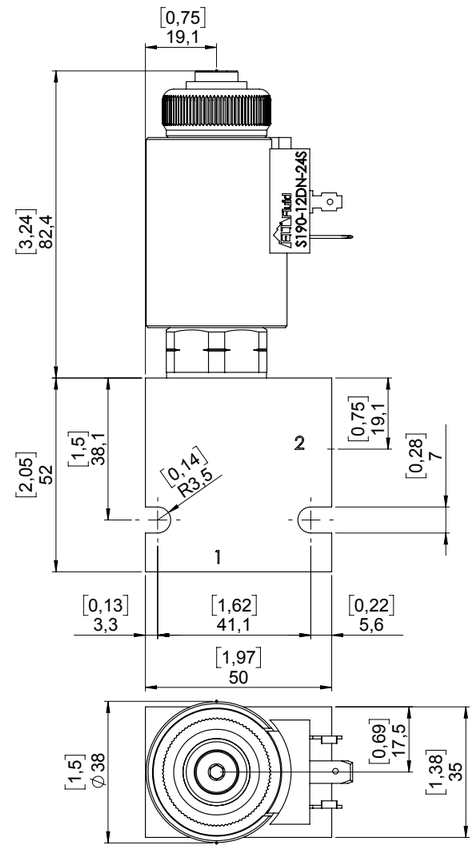

STANDARD HOUSING

Ordering code:	See page 9.03.001
Material:*	Aluminium/Steel Max working pressure for aluminum body: 210 bar Max working pressure for steel body: 350 bar

**Note:* To correctly select the material, in relation to application, see page S.003.

Ordering code

E10N-2S1 - -

Seals
- None (std. NBR+Polyurethane)
- **Y**- Polyurethane
- For other options contact Sales dept.

*Options**
- None (std. without override)
- **S**- Screw out

Voltage
- None (std. without coil)
- **12**- Vdc
- **24**- Vdc

Connector
- **DN**- Din
- **DU**- Deutsch
- **AM**- Amp Junior

Material std. housing
- **A**- Aluminium
- **S**- Steel

Housing size ports
- None (std. only cartridge)
- **3B**- 3/8" BSP
- **4B**- 1/2" BSP
- **3S**- SAE 8
- **4S**- SAE 10

**Note:* Information about manual override is available at page S.001

E08N-30

Solenoid valve 3 ways 2 positions, direct acting spool type

Description
Electric cartridge valve on/off, spool type, 3 ways, 2 positions.

Operation mode
A spring holds the spool in position to allow connection of 2 to 3 and 1 is closed.
When the solenoid is energized, the spool is shifted (pulled) to allow connection of 2 with 1 and 3 is closed.

GENERAL DATA
Weight without coil: 0,15 Kg (0,33 lbs).
Ambient temperature range: -30 °C a 60 °C with standard seals (NBR).
Max. proof pressure: 300 bar (4.350 psi).
Flow Max: 12 l/min (3,2 gpm).
Cartridge materials: high strength steel, internal parts hardened and grinding.

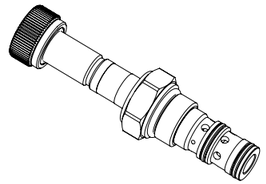

TECHNICAL DATA

HYDRAULIC	
Max. working pressure:	210 bar (3.045 psi)
Flow rate:	See Performance graph
Fluid: *Viscosity:*	Mineral based oil From 15cSt to 250 cSt
Leakage:	80 cc/min P max. 210 bar (3.045 psi)
Standard seals:	O-ring NBR Seals Polyurethane
Cavity:	SCN0830
Installation torque:	27 Nm
Coil nut torque:	2 Nm
Max contamination level:	NAS 8 ISO 4406 19/17/14
Fluid temperature range:	From -20 °C to +80 °C
Seal kit std.:	5AG0021
ELECTRIC	
Type of voltage:	DC
Insulation index:	H
Nominal voltage:	+/- 10 %
Power at 20 °C:	20,5 W
ED:*	100% with ambient temperature range -20 °C +40 °C
Coil code: *(see page 9.01.002)*	S130-20S

**Note:* For temperature or special conditions contact our sales department.

Drawing

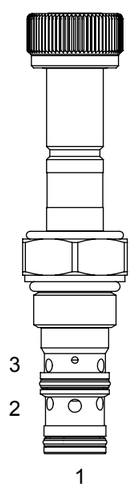

Hydraulic symbol

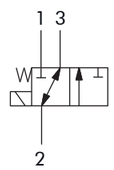

Pressure drop

Oil viscosity: 46 cSt (217 SSU) Fluid temperature: 40 °C

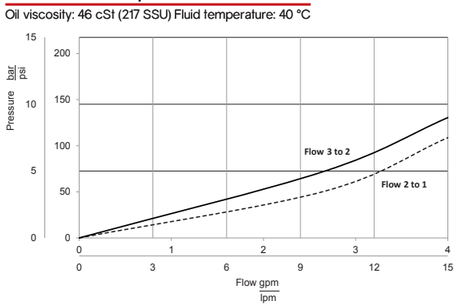

Performance graph

Oil viscosity: 46 cSt (217 SSU) Fluid temperature: 40 °C

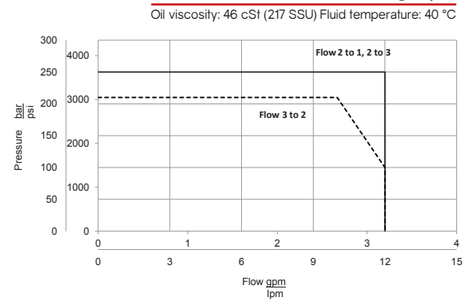

E08N-30

Inches
Millimeters

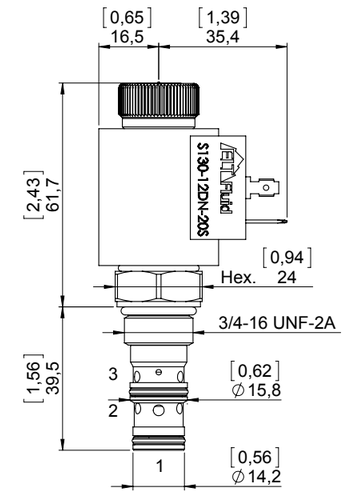

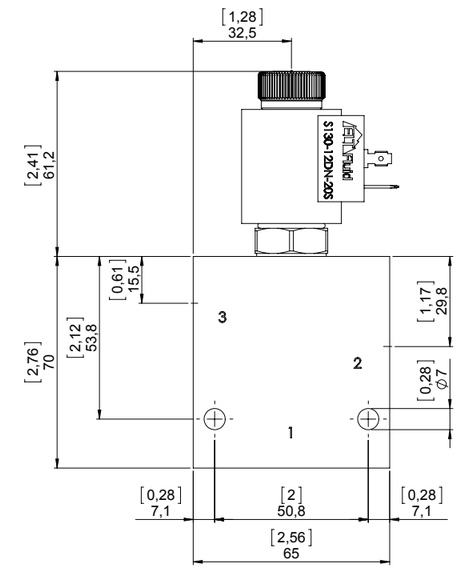

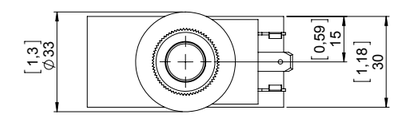

STANDARD HOUSING

Ordering code:	See page 9.02.002
Material:*	Aluminium/Steel Max working pressure for aluminum body: 210 bar Max working pressure for steel body: 350 bar

**Note:* To correctly select the material, in relation to application, see page S.003.

Ordering code

E08N-30 - -

Seals
- None (std. NBR)
- **Y**- Polyurethane
- For other options contact Sales dept.

*Options**
- None (std. without override)
- **S**- Screw out

Connector
- **DN**- Din
- **DU**- Deutsch
- **AM**- Amp Junior

Voltage
- None (std. without coil)
- **12**- Vdc
- **24**- Vdc

Material std. housing
- **A**- Aluminium
- **S**- Steel

Housing size ports
- None (std. only cartridge)
- **2B**- 1/4" BSP
- **3B**- 3/8" BSP
- **2S**- SAE 6
- **3S**- SAE 8

**Note:* Information about manual override is available at page S.001

E08N-31

Solenoid valve 3 ways 2 positions, direct acting spool type

Description
Electric cartridge valve on/off, spool type, 3 ways, 2 positions.

Operation mode
A spring holds the spool in position to allow connection of 2 to 1 and 3 is closed.
When the solenoid is energized, the spool is shifted (pushed) to allow connection of 2 with 3 and 1 is closed.

GENERAL DATA
Weight without coil: 0,15 Kg (0,33 lbs).
Ambient temperature range: -30 °C a 60 °C with standard seals (NBR).
Max. proof pressure: 300 bar (4.350 psi).
Flow Max: 12 l/min (3,2 gpm).
Cartridge materials: high strength steel, internal parts hardened and grinding.

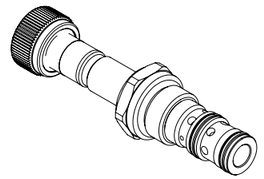

TECHNICAL DATA

HYDRAULIC

Max. working pressure:	210 bar (3.045 psi)
Flow rate:	See Performance graph
Fluid: *Viscosity:*	Mineral based oil From 15cSt to 250 cSt
Leakage:	80 cc/min P max. 210 bar (3.045 psi)
Standard seals:	O-ring NBR Seals Polyurethane
Cavity:	SCN0830
Installation torque:	27 Nm
Coil nut torque:	2 Nm
Max contamination level:	NAS 8 ISO 4406 19/17/14
Fluid temperature range:	From -20 °C to +80 °C
Seal kit std.:	5AG0021

ELECTRIC

Type of voltage:	DC
Insulation index:	H
Nominal voltage:	+/- 10 %
Power at 20 °C:	20,5 W
ED:*	100% with ambient temperature range -20 °C +40 °C
Coil code: *(see page 9.01.002)*	S130-20S

**Note:* For temperature or special conditions contact our sales department.

Drawing

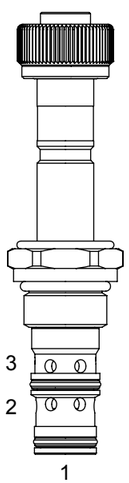

Hydraulic symbol

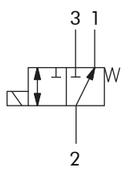

Pressure drop

Oil viscosity: 46 cSt (217 SSU) Fluid temperature: 40 °C

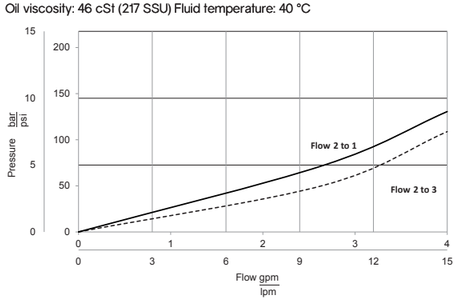

Performance graph

Oil viscosity: 46 cSt (217 SSU) Fluid temperature: 40 °C

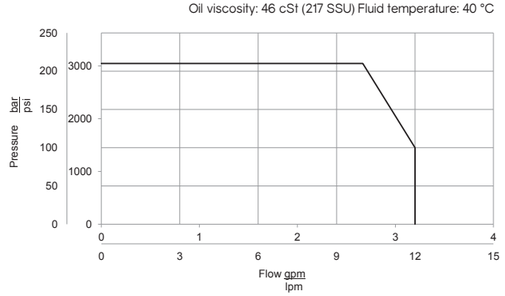

E08N-31

Inches
Millimeters

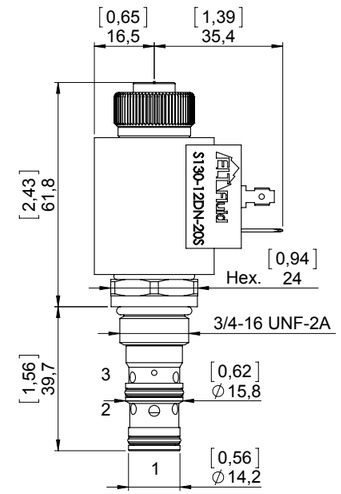

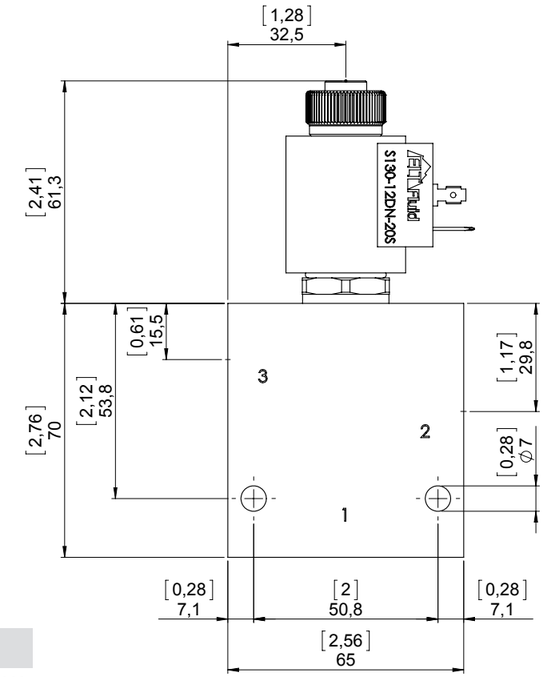

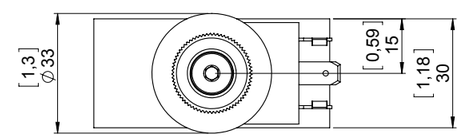

STANDARD HOUSING

Ordering code:	See page 9.02.002
Material:*	Aluminium/Steel Max working pressure for aluminum body: 210 bar Max working pressure for steel body: 350 bar

**Note:* To correctly select the material, in relation to application, see page S.003.

Ordering code

E08N-31 - -

Seals
- None (std. NBR)
- **Y**- Polyurethane
- For other options contact Sales dept.

*Options**
- None (std. without override)
- **P**- Push
- **PT**- Push and twist
- **SV**- Screw in

Connector
- **DN**- Din
- **DU**- Deutsch
- **AM**- Amp Junior

Voltage
- None (std. without coil)
- **12**- Vdc
- **24**- Vdc

Material std. housing
- **A**- Aluminium
- **S**- Steel

Housing size ports
- None (std. only cartridge)
- **2B**- 1/4" BSP
- **3B**- 3/8" BSP
- **2S**- SAE 6
- **3S**- SAE 8

**Note:* Information about manual override is available at page S.001

E08N-32

Solenoid valve 3 ways 2 positions, direct acting spool type.

Description
Electric cartridge valve on/off, spool type, 3 ways, 2 positions.

Operation mode
A spring holds the spool in position to allow connection of 1 to 3 and 2 is closed.
When the solenoid is energized, the spool is shifted (pushed) to allow connection of 2 with 1 and 3 is closed.

GENERAL DATA
Weight without coil: 0,15 Kg (0,33 lbs).
Ambient temperature range: -30 °C a 60 °C with standard seals (NBR).
Max. proof pressure: 300 bar (4.350 psi).
Flow Max: 12 l/min (3,2 gpm).
Cartridge materials: high strength steel, internal parts hardened and grinding.

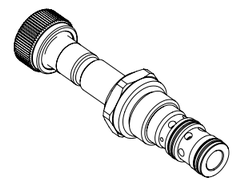

TECHNICAL DATA

HYDRAULIC	
Max. working pressure:	210 bar (3.045 psi)
Flow rate:	See Performance graph
Fluid: *Viscosity:*	Mineral based oil From 15cSt to 250 cSt
Leakage:	80 cc/min P max. 210 bar (3.045 psi)
Standard seals:	O-ring NBR Seals Polyurethane
Cavity:	SCN0830
Installation torque:	27 Nm
Coil nut torque:	2 Nm
Max contamination level:	NAS 8 ISO 4406 19/17/14
Fluid temperature range:	From -20 °C to +80 °C
Seal kit std.:	5AG0021
ELECTRIC	
Type of voltage:	DC
Insulation index:	H
Nominal voltage:	+/- 10 %
Power at 20 °C:	20,5 W
ED:*	100% with ambient temperature range -20 °C +40 °C
Coil code: *(see page 9.01.002)*	S130-20S

**Note:* For temperature or special conditions contact our sales department.

Drawing

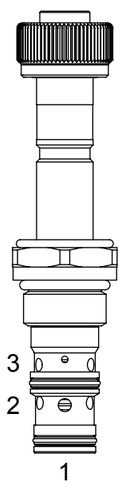

Hydraulic symbol

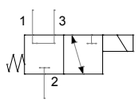

Pressure drop

Oil viscosity: 46 cSt (217 SSU) Fluid temperature: 40 °C

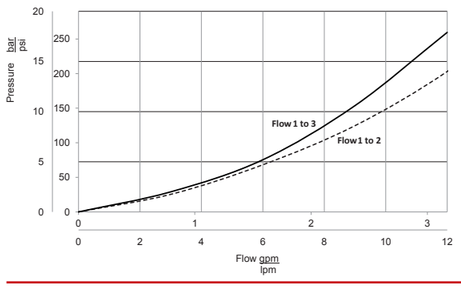

Performance graph

Oil viscosity: 46 cSt (217 SSU) Fluid temperature: 40 °C

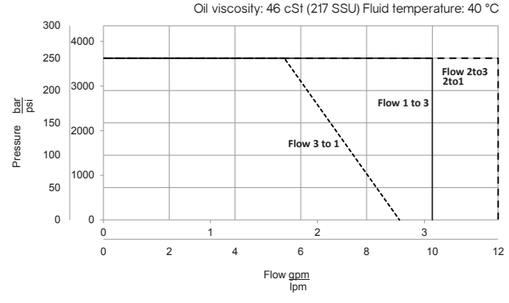

E08N-32

Inches
Millimeters

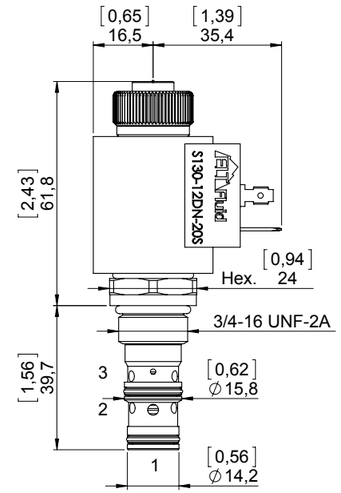

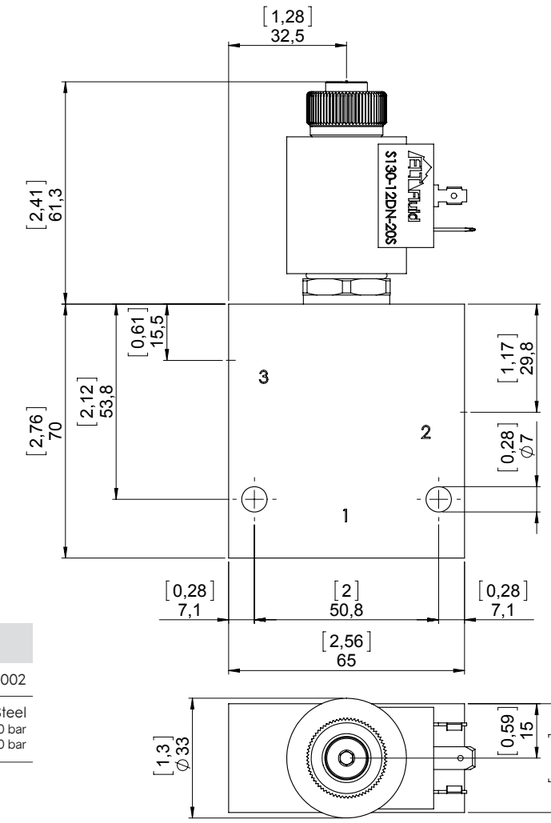

STANDARD HOUSING

Ordering code:	See page 9.02.002
Material:*	Aluminium/Steel Max working pressure for aluminum body: 210 bar Max working pressure for steel body: 350 bar

**Note:* To correctly select the material, in relation to application, see page S.003.

Ordering code

E08N-32 - -

Seals
- None (std. NBR)
- **Y**- Polyurethane
- For other options contact Sales dept.

*Options**
- None (std. without override)
- **P**- Push
- **PT**- Push and twist
- **SV**- Screw in

Connector
- **DN**- Din
- **DU**- Deutsch
- **AM**- Amp Junior

Voltage
- None (std. without coil)
- **12**- Vdc
- **24**- Vdc

Material std. housing
- **A**- Aluminium
- **S**- Steel

Housing size ports
- None (std. only cartridge)
- **2B**- 1/4" BSP
- **3B**- 3/8" BSP
- **2S**- SAE 6
- **3S**- SAE 8

**Note:* Information about manual override is available at page S.001

Electric valve

E08N-33

Solenoid valve 3 ways 2 positions, direct acting spool type

Description

Electric cartridge valve on/off, spool type, 3 ways, 2 positions.

Operation mode

A spring holds the spool in position to allow connection of 1 to 2 and 3 is closed.

When the solenoid is energized, the spool is shifted (pulled) to allow connection of 3 with 1 and 2 is closed.

GENERAL DATA

Weight without coil: 0,15 Kg (0,33 lbs).

Ambient temperature range: -30 °C a 60 °C with standard seals (NBR).

Max. proof pressure: 300 bar (4.350 psi).

Flow Max: 10 l/min (2,7 gpm).

Cartridge materials: high strength steel, internal parts hardened and grinding.

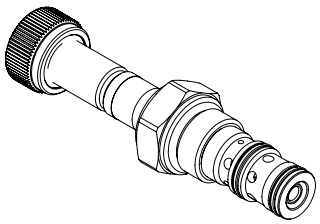

TECHNICAL DATA

HYDRAULIC

Max. working pressure:	210 bar (3.045 psi)
Flow rate:	See Performance graph
Fluid: *Viscosity:*	Mineral based oil From 15cSt to 250 cSt
Leakage:	80 cc/min P max. 210 bar (3.045 psi)
Standard seals:	O-ring NBR Seals Polyurethane
Cavity:	SCN0830
Installation torque:	27 Nm
Coil nut torque:	2 Nm
Max contamination level:	NAS 8 ISO 4406 19/17/14
Fluid temperature range:	From -20 °C to +80 °C
Seal kit std.:	5AG0021

ELECTRIC

Type of voltage:	DC
Insulation index:	H
Nominal voltage:	+/- 10 %
Power at 20 °C:	20,5 W
ED:*	100% with ambient temperature range -20 °C +40 °C
Coil code: *(see page 9.01.002)*	S130-20S

**Note:* For temperature or special conditions contact our sales department.

Drawing

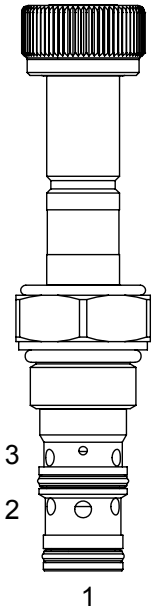

Hydraulic symbol

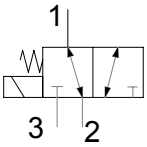

Pressure drop

Oil viscosity: 46 cSt (217 SSU) Fluid temperature: 40 °C

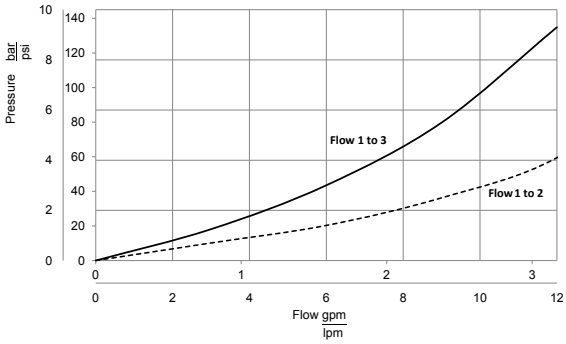

Performance graph

Oil viscosity: 46 cSt (217 SSU) Fluid temperature: 40 °C

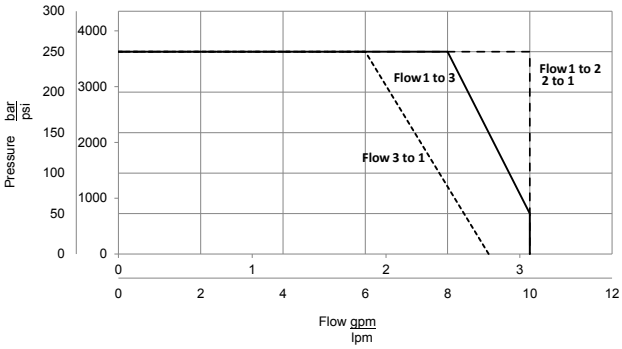

E08N-33

Inches
Millimeters

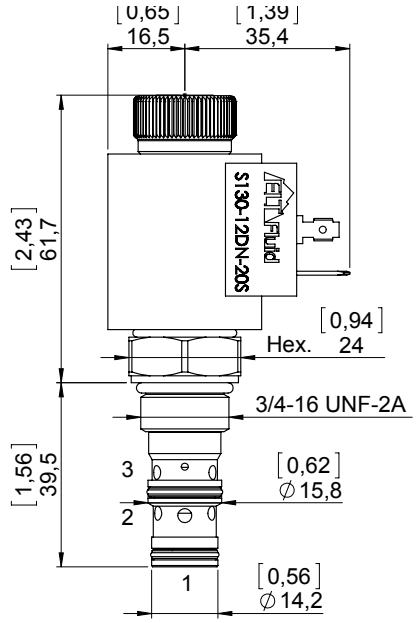

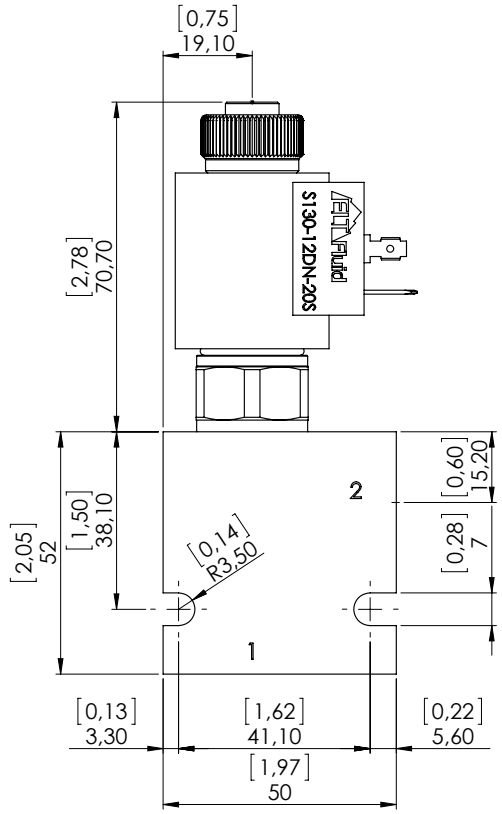

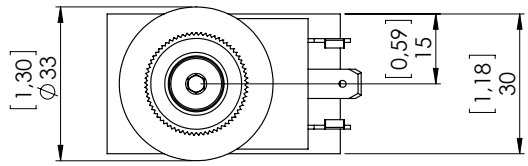

STANDARD HOUSING	
Ordering code:	See page 9.02.002
Material:*	Aluminium/Steel Max working pressure for aluminum body: 210 bar Max working pressure for steel body: 350 bar

**Note:* To correctly select the material, in relation to application, see page S.003.

Ordering code

E08N-33 - -

Seals
- None (std. NBR)
- **Y**- Polyurethane
- For other options contact Sales dept.

*Options**
- None (std. without override)
- **S**- Screw out

Connector
- **DN**- Din
- **DU**- Deutsch
- **AM**- Amp Junior

Voltage
- None (std. without coil)
- **12**- Vdc
- **24**- Vdc

Material std. housing
- **A**- Aluminium
- **S**- Steel

Housing size ports
- None (std. only cartridge)
- **2B**- 1/4" BSP
- **3B**- 3/8" BSP
- **2S**- SAE 6
- **3S**- SAE 8

**Note:* Information about manual override is available at page S.001

E10N-30

Solenoid valve 3 ways 2 positions, direct acting spool type

Description
Electric cartridge valve on/off, spool type, 3 ways, 2 positions.

Operation mode
A spring holds the spool in position to allow connection of 2 to 3 and 1 is closed.
When the solenoid is energized, the spool is shifted (pulled) to allow connection of 1 with 2 and 3 is closed.

GENERAL DATA
Weight without coil: 0,29 Kg (0,62 lbs).
Ambient temperature range: -30 °C a 60 °C with standard seals (NBR).
Max. proof pressure 300 bar (4.350 psi).
Flow Max: 20 l/min (5,3 gpm).
Cartridge materials: high strength steel, internal parts hardened and grinding.

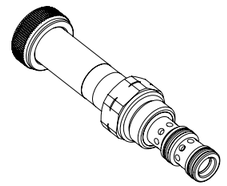

TECHNICAL DATA

HYDRAULIC	
Max. working pressure:	210 bar (3.045 psi)
Flow rate:	See Performance graph
Fluid: *Viscosity:*	Mineral based oil From 15cSt to 250 cSt
Leakage:	160 cc/min P max. 210 bar (3.045 psi)
Standard seals:	O-ring NBR Seals Polyurethane
Cavity:	SCN1030
Installation torque:	35 Nm
Coil nut torque:	2 Nm
Max contamination level:	NAS 8 ISO 4406 19/17/14
Fluid temperature range:	From -20 °C to +80 °C
Seal kit std.:	5AG0017
ELECTRIC	
Type of voltage:	DC
Insulation index:	H
Nominal voltage:	+/- 10 %
Power at 20 °C:	24 W
ED:*	100% with ambient temperature range -20 °C +40 °C
Coil code: *(see page 9.02.001)*	S190-24S

**Note:* For temperature or special conditions contact our sales department.

Drawing

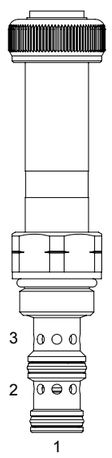

Hydraulic symbol

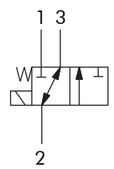

Pressure drop

Oil viscosity: 46 cSt (217 SSU) Fluid temperature: 40 °C

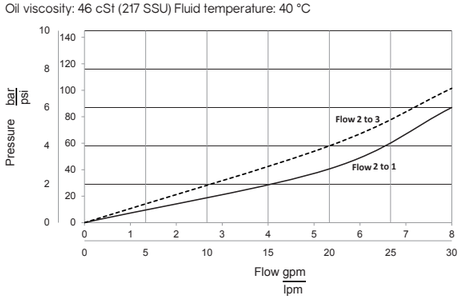

Performance graph

Oil viscosity: 46 cSt (217 SSU) Fluid temperature: 40 °C

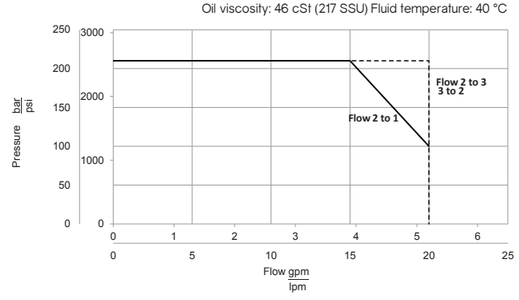

E10N-30

Inches
Millimeters

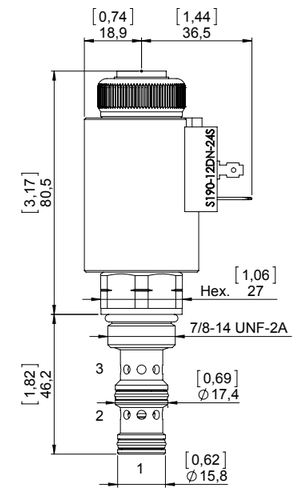

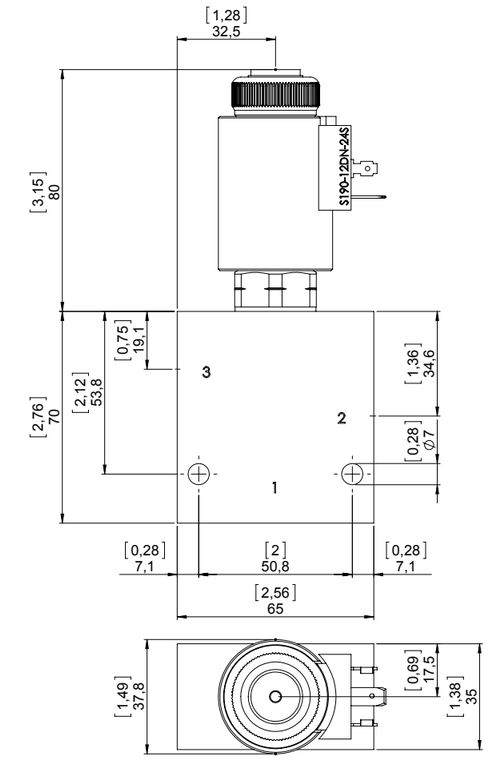

STANDARD HOUSING

Ordering code:	See page 9.03.002
Material:*	Aluminium/Steel Max working pressure for aluminum body: 210 bar Max working pressure for steel body: 350 bar

**Note:* To correctly select the material, in relation to application, see page S.003.

Ordering code

E10N-30 - -

Seals
- None (std. NBR+Polyurethane)
- **Y**- Polyurethane
- For other options contact Sales dept.

*Options**
- None (std. without override)
- **S**- Screw out

Connector
- **DN**- Din
- **DU**- Deutsch
- **AM**- Amp Junior

Voltage
- None (std. without coil)
- **12**- Vdc
- **24**- Vdc

Material std. housing
- **A**- Aluminium
- **S**- Steel

Housing size ports
- None (std. only cartridge)
- **3B**- 3/8" BSP
- **4B**- 1/2" BSP
- **3S**- SAE 8
- **4S**- SAE 10

**Note:* Information about manual override is available at page S.001

E10N-31

Solenoid valve 3 ways 2 positions, direct acting spool type

Description
Electric cartridge valve on/off, spool type, 3 ways, 2 positions.

Operation mode
A spring holds the spool in position to allow connection of 2 to 1 and 3 is closed.
When the solenoid is energized, the spool is shifted (pushed) to allow connection of 3 with 2 and 1 is closed.

GENERAL DATA
Weight without coil: 0,29 Kg (0,62 lbs).
Ambient temperature range: -30 °C a 60 °C with standard seals (NBR).
Max. proof pressure 300 bar (4.350 psi).
Flow Max: 20 l/min (5,3 gpm).
Cartridge materials: high strength steel, internal parts hardened and grinding.

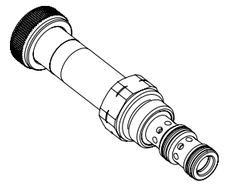

Drawing

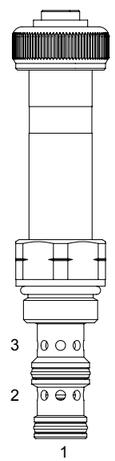

Hydraulic symbol

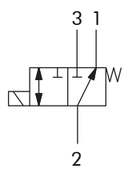

TECHNICAL DATA

HYDRAULIC

Max. working pressure:	210 bar (3.045 psi)
Flow rate:	See Performance graph
Fluid: *Viscosity:*	Mineral based oil From 15cSt to 250 cSt
Leakage:	160 cc/min P max. 210 bar (3.045 psi)
Standard seals:	O-ring NBR Seals Polyurethane
Cavity:	SCN1030
Installation torque:	35 Nm
Coil nut torque:	2 Nm
Max contamination level:	NAS 8 ISO 4406 19/17/14
Fluid temperature range:	From -20 °C to +80 °C
Seal kit std.:	5AG0017

ELECTRIC

Type of voltage:	DC
Insulation index:	H
Nominal voltage:	+/- 10 %
Power at 20 °C:	24 W
ED:*	100% with ambient temperature range -20 °C +40 °C
Coil code: *(see page 9.02.001)*	S190-24S

**Note:* For temperature or special conditions contact our sales department.

Pressure drop

Oil viscosity: 46 cSt (217 SSU) Fluid temperature: 40 °C

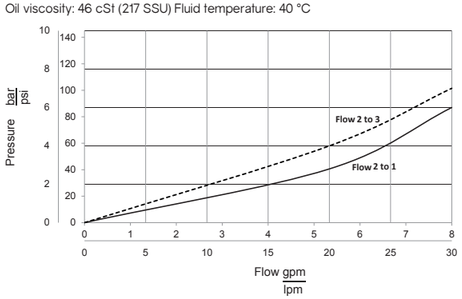

Performance graph

Oil viscosity: 46 cSt (217 SSU) Fluid temperature: 40 °C

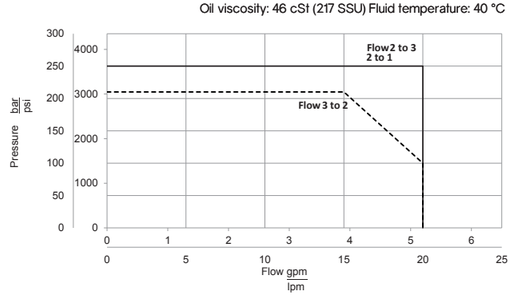

E10N-31

Inches
Millimeters

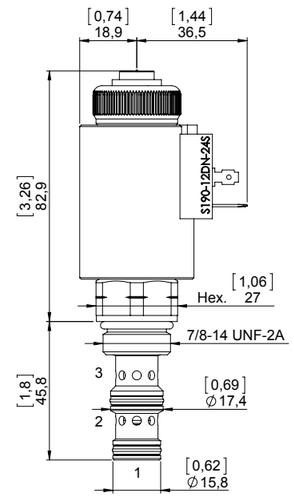

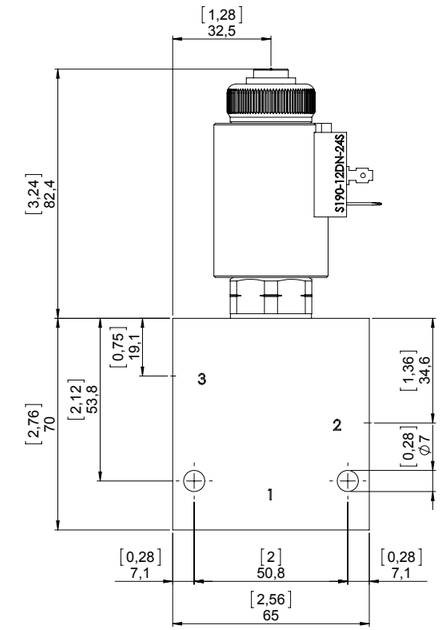

STANDARD HOUSING

Ordering code:	See page 9.03.002
Material:*	Aluminium/Steel Max working pressure for aluminum body: 210 bar Max working pressure for steel body: 350 bar

**Note:* To correctly select the material, in relation to application, see page S.003.

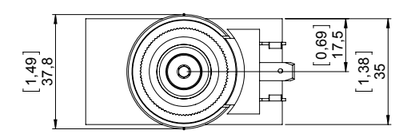

Ordering code

E10N-31 - -

Seals
- None (std. NBR+Polyurethane)
- **Y**- Polyurethane
- For other options contact Sales dept.

*Options**
- None (std. without override)
- **P**- Push
- **PT**- Push and twist
- **SV**- Screw in

Connector
- **DN**- Din
- **DU**- Deutsch
- **AM**- Amp Junior

Voltage
- None (std. without coil)
- **12**- Vdc
- **24**- Vdc

Material std. housing
- **A**- Aluminium
- **S**- Steel

Housing size ports
- None (std. only cartridge)
- **3B**- 3/8" BSP
- **4B**- 1/2" BSP
- **3S**- SAE 8
- **4S**- SAE 10

**Note:* Information about manual override is available at page S.001

E10N-3T1

Solenoid valve 3 ways 2 positions, direct acting poppet lock type

Description

Electric cartridge valve on/off, poppet lock type, 3 ways, 2 positions.

Operation mode

A spring holds the spool in position to allow connection of 2 to 1 and 3 is locked.
When the solenoid is energized, the spool is shifted (pushed) to allow connection of 2 with 3 and 1 is locked.

GENERAL DATA

Weight without coil: 0,26 Kg (0,57 lbs).
Ambient temperature range: -30 °C a 60 °C with standard seals (NBR).
Max. proof pressure 300 bar (4.350 psi).
Flow Max: 20 l/min (5,3 gpm).
Cartridge materials: high strength steel, internal parts hardened and grinding.

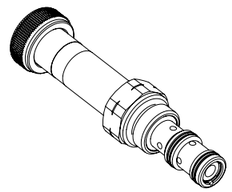

Drawing

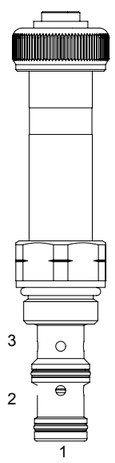

Hydraulic symbol

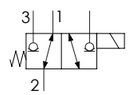

TECHNICAL DATA

HYDRAULIC	
Max. working pressure:	210 bar (3.045 psi)
Flow rate:	See Performance graph
Fluid: *Viscosity:*	Mineral based oil From 15cSt to 250 cSt
Leakage:	1 cc/min P max. 20 bar (3.045 psi)
Standard seals:	O-ring NBR Seals Polyurethane
Cavity:	SCN1030
Installation torque:	40 Nm
Coil nut torque:	2 Nm
Max contamination level:	NAS 8 ISO 4406 19/17/14
Fluid temperature range:	From -20 °C to +80 °C
Seal kit std.:	5AG0041
ELECTRIC	
Type of voltage:	DC
Insulation index:	H
Nominal voltage:	+/- 10 %
Power at 20 °C:	36 W
ED:*	100% with ambient temperature range -20 °C +40 °C
Coil code: *(see page 9.02.002)*	S190-26S

**Note:* For temperature or special conditions contact our sales department.

Pressure drop

Oil viscosity: 46 cSt (217 SSU) Fluid temperature: 40 °C

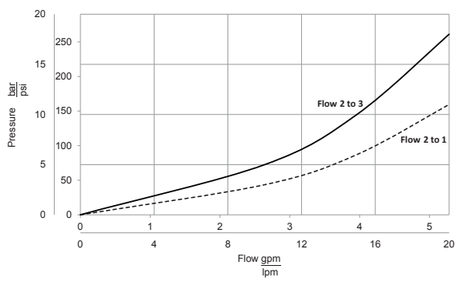

E10N-3T1

Inches
Millimeters

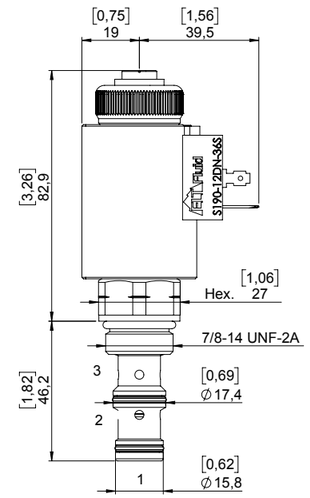

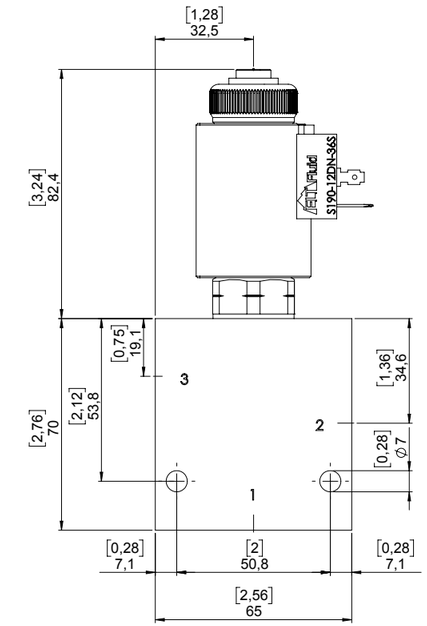

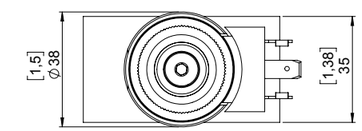

STANDARD HOUSING

Ordering code:	See page 9.03.002
Material:*	Aluminium/Steel Max working pressure for aluminum body: 210 bar Max working pressure for steel body: 350 bar

**Note:* To correctly select the material, in relation to application, see page S.003.

Ordering code

E10N-3T1 - -

Seals
- None (std. NBR+Polyurethane)
- **Y**- Polyurethane
- For other options contact Sales dept.

*Options**
- None (std. without override)
- **P**- Push
- **PT**- Push and twist
- **SV**- Screw in

Connector
- **DN**- Din
- **DU**- Deutsch
- **AM**- Amp Junior

Voltage
- None (std. without coil)
- **12**- Vdc
- **24**- Vdc

Material std. housing
- **A**- Aluminium
- **S**- Steel

Housing size ports
- None (std. only cartridge)
- **3B**- 3/8" BSP
- **4B**- 1/2" BSP
- **3S**- SAE 8
- **4S**- SAE 10

**Note:* Information about manual override is available at page S.001

E12N-31

Solenoid valve 3 ways 2 positions, direct acting spool type

Description
Electric cartridge valve on/off, spool type, 3 ways, 2 positions.

Operation mode
A spring holds the spool in position to allow connection of 2 to 1 and 3 is closed.
When the solenoid is energized, the spool is shifted (pushed) to allow connection of 3 with 2 and 1 is closed.

GENERAL DATA
Weight without coil: 0,44 Kg (0,97 lbs).
Ambient temperature range: -30 °C a 60 °C with standard seals (NBR).
Max. proof pressure 300 bar (4.350 psi).
Flow Max: 50 l/min (13,2 gpm).
Cartridge materials: high strength steel, internal parts hardened and grinding.

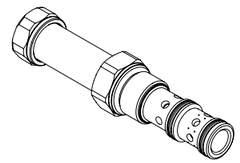

Drawing

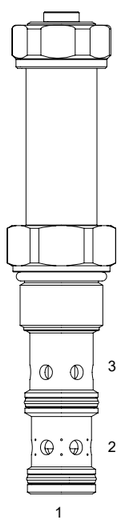

Hydraulic symbol

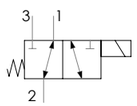

TECHNICAL DATA

HYDRAULIC	
Max. working pressure:	250 bar (3.626 psi)
Flow rate:	See Performance graph
Fluid: *Viscosity:*	Mineral based oil From 15cSt to 250 cSt
Leakage:	350 cc/min P max. 250 bar (3.626 psi)
Standard seals:	O-ring NBR Seals Polyurethane
Cavity:	SCN1230
Installation torque:	50 Nm
Coil nut torque:	2 Nm
Max contamination level:	NAS 8 ISO 4406 19/17/14
Fluid temperature range:	From -20 °C to +80 °C
Seal kit std.:	5AG0042
ELECTRIC	
Type of voltage:	DC
Insulation index:	H
Nominal voltage:	+/- 10 %
Power at 20 °C:	28 W
ED:*	100% with ambient temperature range -20 °C +40 °C
Coil code: *(see page 9.02.002)*	S230-28S

**Note:* For temperature or special conditions contact our sales department.

Pressure drop

Oil viscosity: 46 cSt (217 SSU) Fluid temperature: 40 °C

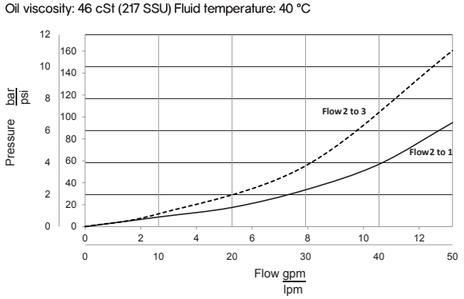

Performance graph

Oil viscosity: 46 cSt (217 SSU) Fluid temperature: 40 °C

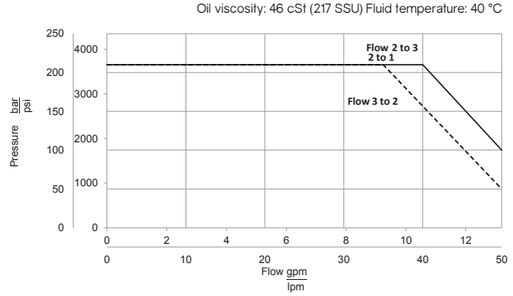

E12N-31

Inches
Millimeters

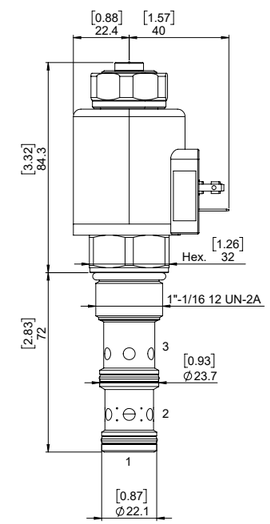

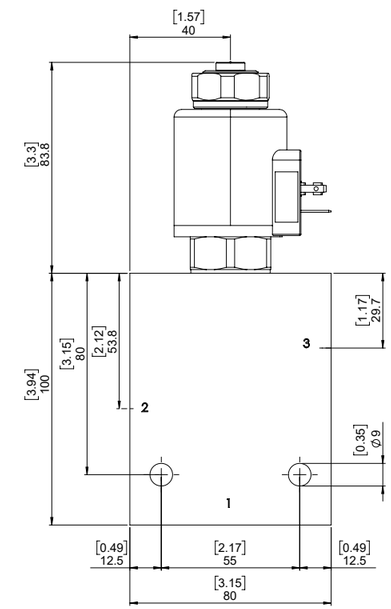

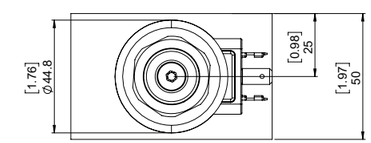

STANDARD HOUSING

Ordering code:	See page 9.04.002
Material:*	Aluminium/Steel Max working pressure for aluminum body: 210 bar Max working pressure for steel body: 350 bar

**Note:* To correctly select the material, in relation to application, see page S.003.

Ordering code

E12N-31 - - -

Seals
- None (std. NBR)
- **Y**- Polyurethane
- For other options contact Sales dept.

*Options**
- None (std. without override)
- **P**- Push
- **PT**- Push and twist
- **SV**- Screw in

Connector
- **DN**- Din
- **DU**- Deutsch
- **AM**- Amp Junior

Voltage
- None (std. without coil)
- **12**- Vdc
- **24**- Vdc

Material std. housing
- **A**- Aluminium
- **S**- Steel

Housing size ports
- None (std. only cartridge)
- **4B**- 1/2" BSP
- **5B**- 3/4" BSP
- **4S**- SAE 10
- **5S**- SAE 12

**Note:* Information about manual override is available at page S.001

E08N-4A0

Solenoid valve 4 ways 2 positions, direct acting spool type

Description

Electric cartridge valve on/off, spool type, 4 ways, 2 positions.

Operation mode

A spring holds the spool in position so that the oil flow is stopped in all ports (1-2-3-4).
When the solenoid is energized, the spool is pulled to allow connection of 3 with 4 and 2 with 1.

GENERAL DATA

Weight without coil: 0,16 Kg (0,36 lbs).
Ambient temperature range: -30 °C a 60 °C with standard seals (NBR).
Max. proof pressure ports 2-3-4: 300 bar (4.350 psi).
Max. proof pressure port 1: 210 bar (3.045 psi).
Flow Max: 12 l/min (3,2 gpm).
Cartridge materials: high strength steel, internal parts hardened and grinding.

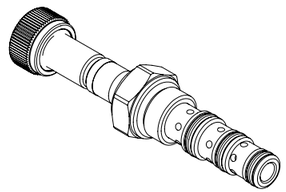

TECHNICAL DATA

HYDRAULIC

Max. working pressure:	210 bar (3.045 psi)
Flow rate:	12 l/min (3,2 gpm)
Fluid: *Viscosity:*	Mineral based oil From 15cSt to 250 cSt
Leakage:	160 cc/min P max. 210 bar (3.045 psi)
Standard seals:	O-ring NBR Seals Polyurethane
Cavity:	SCN0840
Installation torque:	27 Nm
Coil nut torque:	2 Nm
Max contamination level:	NAS 8 ISO 4406 19/17/14
Fluid temperature range:	From -20 °C to +80 °C
Seal kit std.:	5AG0043

ELECTRIC

Type of voltage:	DC
Insulation index:	H
Nominal voltage:	+/- 10 %
Power at 20 °C:	20,5 W
ED:*	100% with ambient temperature range -20 °C +40 °C
Coil code: *(see page 9.01.002)*	S130-20S

**Note:* For temperature or special conditions contact our sales department.

Drawing

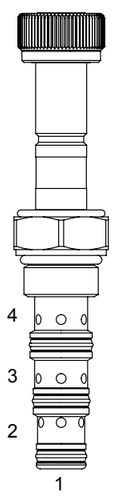

Hydraulic symbol

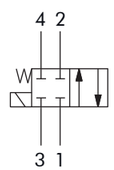

Pressure drop

Oil viscosity: 46 cSt (217 SSU) Fluid temperature: 40 °C

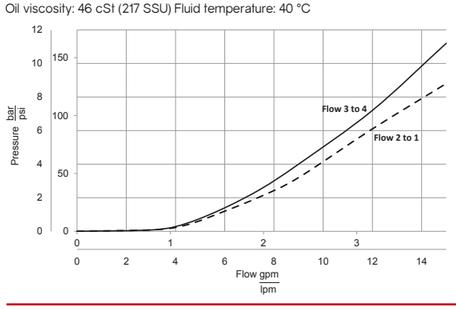

Performance graph

Oil viscosity: 46 cSt (217 SSU) Fluid temperature: 40 °C

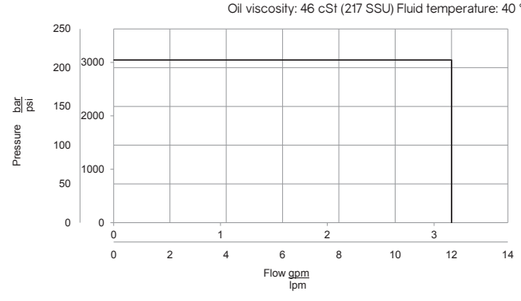

E08N-4A0

Inches
Millimeters

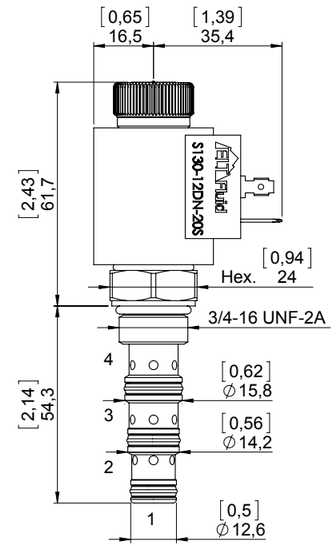

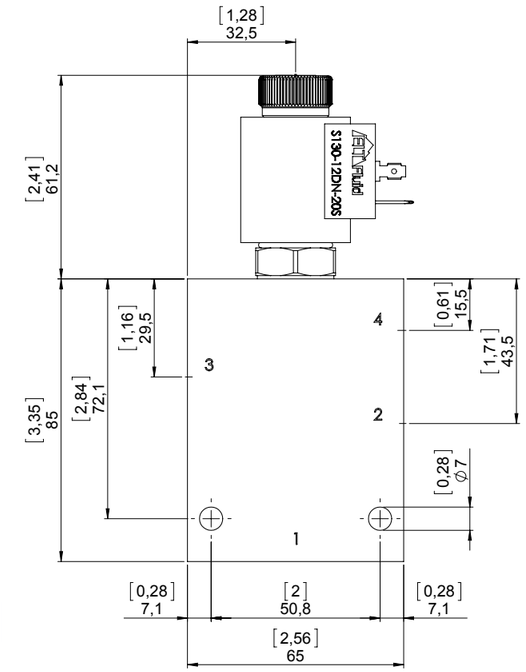

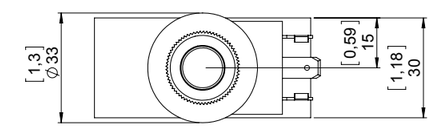

STANDARD HOUSING

Ordering code:	See page 9.02.005
Material:*	Aluminium/Steel Max working pressure for aluminum body: 210 bar Max working pressure for steel body: 350 bar

**Note:* To correctly select the material, in relation to application, see page S.003.

Ordering code

E08N-4A0 - - -

Seals
- None (std. NBR+Polyurethane)
- **Y**- Polyurethane
- For other options contact Sales dept.

*Options**
- None (std. without override)
- **S**- Screw out

Connector
- **DN**- Din
- **DU**- Deutsch
- **AM**- Amp Junior

Voltage
- None (std. without coil)
- **12**- Vdc
- **24**- Vdc

Material std. housing
- **A**- Aluminium
- **S**- Steel

Housing size ports
- None (std. only cartridge)
- **2B**- 1/4" BSP
- **3B**- 3/8" BSP
- **2S**- SAE 6
- **3S**- SAE 8

**Note:* Information about manual override is available at page S.001

E08N-4A1

Solenoid valve 4 ways 2 positions, direct acting spool type

Description
Electric cartridge valve on/off, spool type, 4 ways, 2 positions.

Operation mode
A spring holds the spool in position so that the oil flow is stopped in all ports (1-2-3-4).
When the solenoid is energized, the spool is pushed to permit connection of 3 with 2 and 4 with 1.

GENERAL DATA
Weight without coil: 0,16 Kg (0,36 lbs).
Ambient temperature range: -30 °C a 60 °C with standard seals (NBR).
Max. proof pressure ports 2-3-4: 300 bar (4.350 psi).
Max. proof pressure port 1: 210 bar (3.045 psi).
Flow Max: 12 l/min (3,2 gpm).
Cartridge materials: high strength steel, internal parts hardened and grinding.

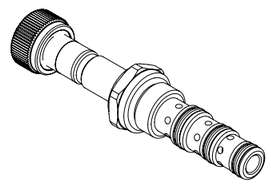

TECHNICAL DATA

HYDRAULIC	
Max. working pressure:	210 bar (3.045 psi)
Flow rate:	12 l/min (3,2 gpm)
Fluid: *Viscosity:*	Mineral based oil From 15cSt to 250 cSt
Leakage:	160 cc/min P max. 210 bar (3.045 psi)
Standard seals:	O-ring NBR Seals Polyurethane
Cavity:	SCN0840
Installation torque:	27 Nm
Coil nut torque:	2 Nm
Max contamination level:	NAS 8 ISO 4406 19/17/14
Fluid temperature range:	From -20 °C to +80 °C
Seal kit std.:	5AG0043
ELECTRIC	
Type of voltage:	DC
Insulation index:	H
Nominal voltage:	+/- 10 %
Power at 20 °C:	20,5 W
ED:*	100% with ambient temperature range -20 °C +40 °C
Coil code: *(see page 9.01.002)*	S130-20S

**Note:* For temperature or special conditions contact our sales department.

Drawing

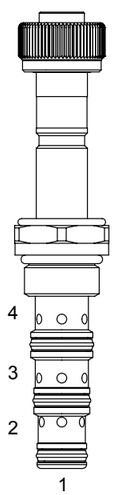

Hydraulic symbol

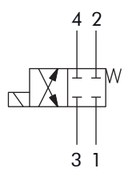

Pressure drop

Oil viscosity: 46 cSt (217 SSU) Fluid temperature: 40 °C

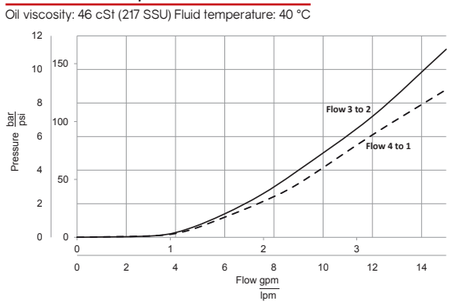

Performance graph

Oil viscosity: 46 cSt (217 SSU) Fluid temperature: 40 °C

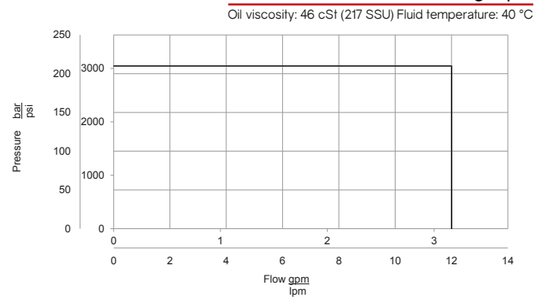

E08N-4A1

Inches
Millimeters

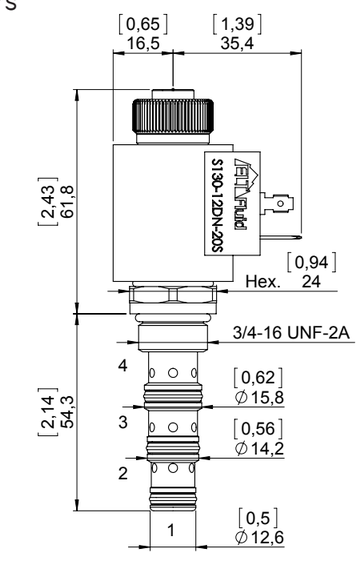

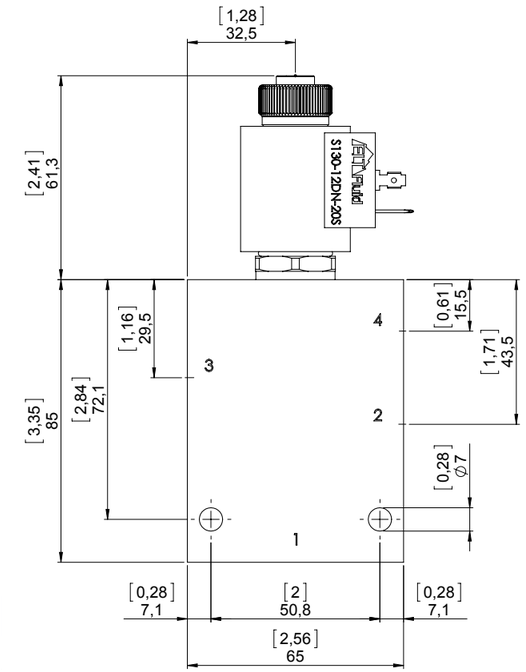

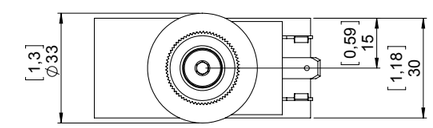

STANDARD HOUSING

Ordering code:	See page 9.02.005
Material:*	Aluminium/Steel Max working pressure for aluminum body: 210 bar Max working pressure for steel body: 350 bar

**Note:* To correctly select the material, in relation to application, see page S.003.

Ordering code

E08N-4A1 - -

Seals
- None (std. NBR+Polyurethane)
- **Y**- Polyurethane
- For other options contact Sales dept.

*Options**
- None (std. without override)
- **P**- Push
- **PT**- Push and twist
- **SV**- Screw in

Connector
- **DN**- Din
- **DU**- Deutsch
- **AM**- Amp Junior

Voltage
- None (std. without coil)
- **12**- Vdc
- **24**- Vdc

Material std. housing
- **A**- Aluminium
- **S**- Steel

Housing size ports
- None (std. only cartridge)
- **2B**- 1/4" BSP
- **3B**- 3/8" BSP
- **2S**- SAE 6
- **3S**- SAE 8

**Note:* Information about manual override is available at page S.001

E08N-4B0

Solenoid valve 4 ways 2 positions, direct acting spool type

Description
Electric cartridge valve on/off, spool type, 4 ways, 2 positions.

Operation mode
A spring holds the spool in position so that the oil flow is stopped in 3 and partially free from 2 and 4 to 1.
When the solenoid is energized, the spool is pulled to allow connection of 3 with 4 and 2 with 1.

GENERAL DATA
Weight without coil: 0,16 Kg (0,36 lbs).
Ambient temperature range: -30 °C a 60 °C with standard seals (NBR).
Max. proof pressure ports 2-3-4: 300 bar (4.350 psi).
Max. proof pressure port 1: 210 bar (3.045 psi).
Flow Max: 12 l/min (3,2 gpm).
Cartridge materials: high strength steel, internal parts hardened and grinding.

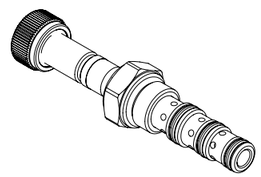

Drawing

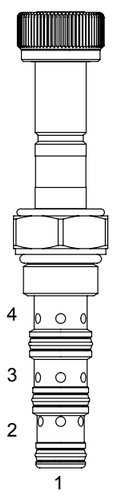

Hydraulic symbol

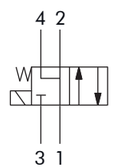

TECHNICAL DATA

HYDRAULIC

Max. working pressure:	210 bar (3.045 psi)
Flow rate:	12 l/min (3,2 gpm)
Fluid: *Viscosity:*	Mineral based oil From 15cSt to 250 cSt
Leakage:	160 cc/min P max. 210 bar (3.045 psi)
Standard seals:	O-ring NBR Seals Polyurethane
Cavity:	SCN0840
Installation torque:	27 Nm
Coil nut torque:	2 Nm
Max contamination level:	NAS 8 ISO 4406 19/17/14
Fluid temperature range:	From -20 °C to +80 °C
Seal kit std.:	5AG0043

ELECTRIC

Type of voltage:	DC
Insulation index:	H
Nominal voltage:	+/- 10 %
Power at 20 °C:	20,5 W
ED:*	100% with ambient temperature range -20 °C +40 °C
Coil code: *(see page 9.01.002)*	S130-20S

**Note:* For temperature or special conditions contact our sales department.

Pressure drop

Oil viscosity: 46 cSt (217 SSU) Fluid temperature: 40 °C

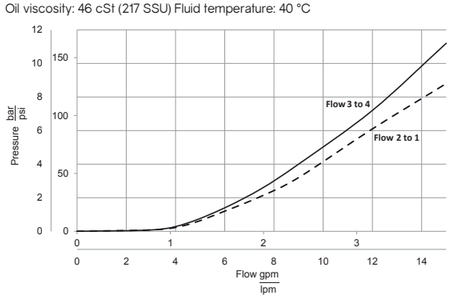

Performance graph

Oil viscosity: 46 cSt (217 SSU) Fluid temperature: 40 °C

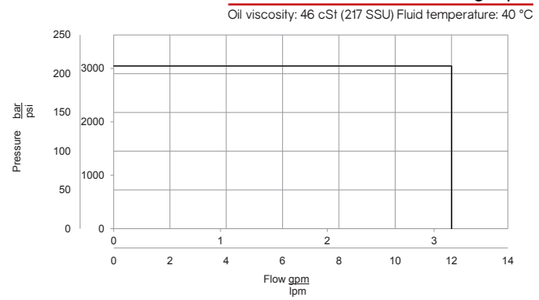

E08N-4B0

Inches
Millimeters

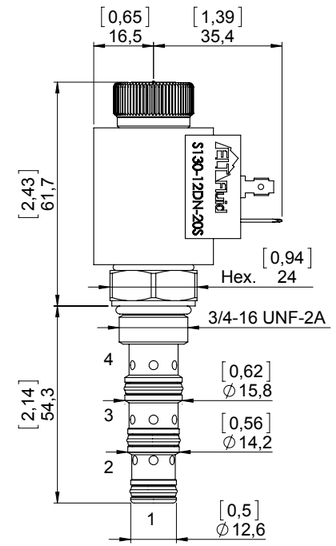

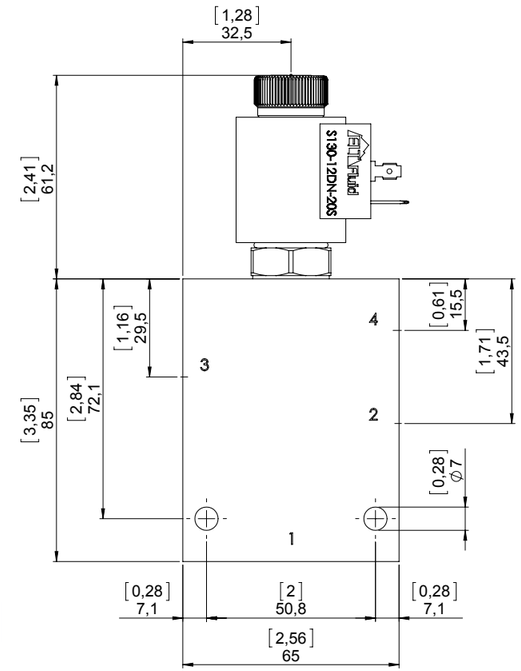

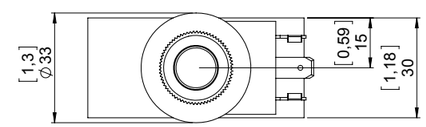

STANDARD HOUSING

Ordering code:	See page 9.02.005
Material:*	Aluminium/Steel Max working pressure for aluminum body: 210 bar Max working pressure for steel body: 350 bar

**Note:* To correctly select the material, in relation to application, see page S.003.

Ordering code

E08N-4B0 - - -

Seals
- None (std. NBR+Polyurethane)
- **Y**- Polyurethane
- For other options contact Sales dept.

*Options**
- None (std. without override)
- **S**- Screw out

Connector
- **DN**- Din
- **DU**- Deutsch
- **AM**- Amp Junior

Voltage
- None (std. without coil)
- **12**- Vdc
- **24**- Vdc

Material std. housing
- **A**- Aluminium
- **S**- Steel

Housing size ports
- None (std. only cartridge)
- **2B**- 1/4" BSP
- **3B**- 3/8" BSP
- **2S**- SAE 6
- **3S**- SAE 8

**Note:* Information about manual override is available at page S.001

E08N-4B1

Solenoid valve 4 ways 2 positions, direct acting spool type

Description
Electric cartridge valve on/off, spool type, 4 ways, 2 positions.

Operation mode
A spring holds the spool in position so that the oil flow is stopped in 3 and partially free from 2 and 4 to 1.
When the solenoid is energized, the spool is pushed to permit connection of 3 with 2 and 4 with 1.

GENERAL DATA
Weight without coil: 0,16 Kg (0,36 lbs).
Ambient temperature range: -30 °C a 60 °C with standard seals (NBR).
Max. proof pressure ports 2-3-4: 300 bar (4.350 psi).
Max. proof pressure port 1: 210 bar (3.045 psi).
Flow Max: 12 l/min (3,2 gpm).
Cartridge materials: high strength steel, internal parts hardened and grinding.

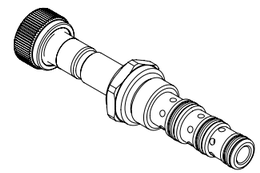

TECHNICAL DATA

HYDRAULIC	
Max. working pressure:	210 bar (3.045 psi)
Flow rate:	12 l/min (3,2 gpm)
Fluid: *Viscosity:*	Mineral based oil From 15cSt to 250 cSt
Leakage:	160 cc/min P max. 210 bar (3.045 psi)
Standard seals:	O-ring NBR Seals Polyurethane
Cavity:	SCN0840
Installation torque:	27 Nm
Coil nut torque:	2 Nm
Max contamination level:	NAS 8 ISO 4406 19/17/14
Fluid temperature range:	From -20 °C to +80 °C
Seal kit std.:	5AG0043
ELECTRIC	
Type of voltage:	DC
Insulation index:	H
Nominal voltage:	+/- 10 %
Power at 20 °C:	20,5 W
ED:*	100% with ambient temperature range -20 °C +40 °C
Coil code: *(see page 9.01.002)*	S130-20S

**Note:* For temperature or special conditions contact our sales department.

Drawing

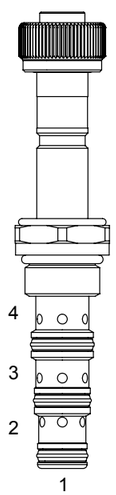

Hydraulic symbol

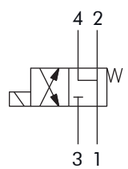

Pressure drop
Oil viscosity: 46 cSt (217 SSU) Fluid temperature: 40 °C

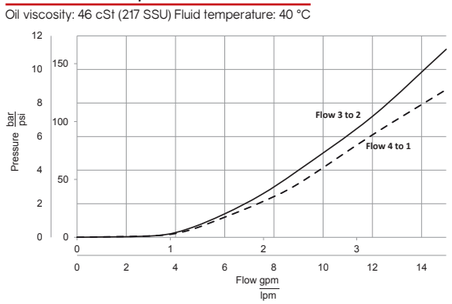

Performance graph
Oil viscosity: 46 cSt (217 SSU) Fluid temperature: 40 °C

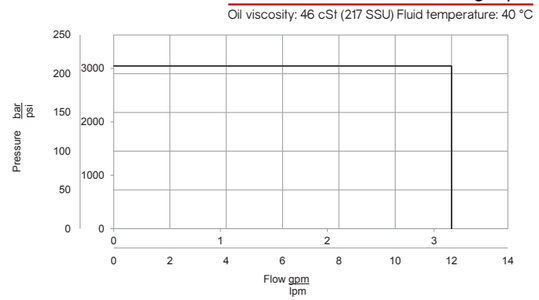

E08N-4B1

Inches
Millimeters

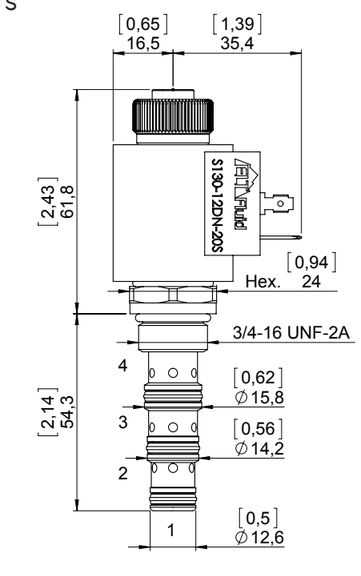

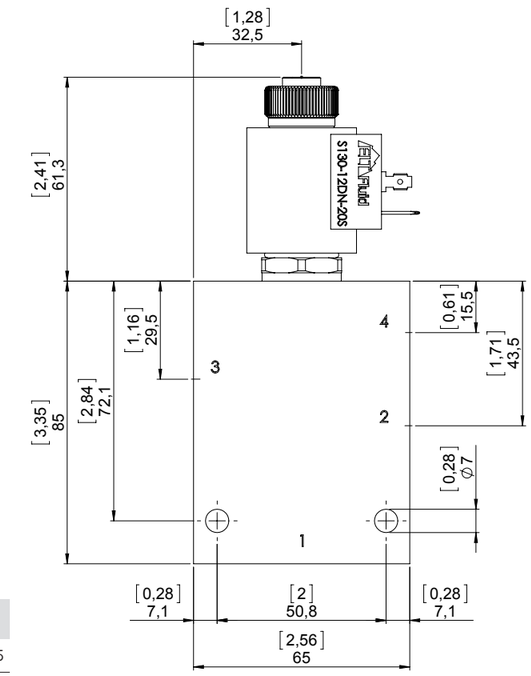

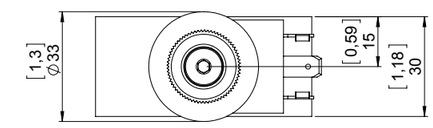

STANDARD HOUSING

Ordering code:	See page 9.02.005
Material:*	Aluminium/Steel Max working pressure for aluminum body: 210 bar Max working pressure for steel body: 350 bar

**Note:* To correctly select the material, in relation to application, see page S.003.

Ordering code

E08N-4B1 - -

Seals
- None (std. NBR+Polyurethane)
- **Y**- Polyurethane
- For other options contact Sales dept.

*Options**
- None (std. without override)
- **P**- Push
- **PT**- Push and twist
- **SV**- Screw in

Connector
- **DN**- Din
- **DU**- Deutsch
- **AM**- Amp Junior

Voltage
- None (std. without coil)
- **12**- Vdc
- **24**- Vdc

Material std. housing
- **A**- Aluminium
- **S**- Steel

Housing size ports
- None (std. only cartridge)
- **2B**- 1/4" BSP
- **3B**- 3/8" BSP
- **2S**- SAE 6
- **3S**- SAE 8

**Note:* Information about manual override is available at page S.001

E08N-4C0

Solenoid valve 4 ways 2 positions, direct acting spool type

Description
Electric cartridge valve on/off, spool type, 4 ways, 2 positions.

Operation mode
A spring holds the spool in position so that the oil flow is allowed in all ports (1-2-3-4).
When the solenoid is energized, the spool is pushed to allow connection of 3 with 4 and 2 with 1.

GENERAL DATA
Weight without coil: 0,16 Kg (0,36 lbs).
Ambient temperature range: -30 °C a 60 °C with standard seals (NBR).
Max. proof pressure ports 2-3-4: 300 bar (4.350 psi).
Max. proof pressure port 1: 210 bar (3.045 psi).
Flow Max: 11 l/min (2,9 gpm).
Cartridge materials: high strength steel, internal parts hardened and grinding.

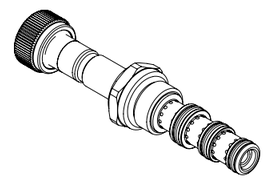

TECHNICAL DATA

HYDRAULIC	
Max. working pressure:	210 cc/min
Flow rate:	11 l/min
Fluid: *Viscosity:*	Mineral based oil From 15cSt to 250 cSt
Leakage:	350 cc/min P max. 210 bar (3.045 psi)
Standard seals:	O-ring NBR Seals Polyurethane
Cavity:	SCN0840
Installation torque:	27 Nm
Coil nut torque:	2 Nm
Max contamination level:	NAS 8 ISO 4406 19/17/14
Fluid temperature range:	From -20 °C to +80 °C
Seal kit std.:	5AG0043
ELECTRIC	
Type of voltage:	DC
Insulation index:	H
Nominal voltage:	+/- 10 %
Power at 20 °C:	20,5 W
ED:*	100% with ambient temperature range -20 °C +40 °C
Coil code: *(see page 9.01.002)*	S130-20S

**Note:* For temperature or special conditions contact our sales department.

Drawing

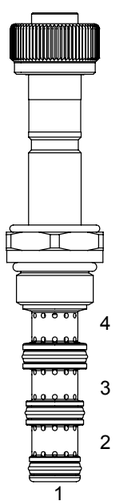

Hydraulic symbol

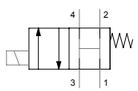

Pressure drop

Oil viscosity: 46 cSt (217 SSU) Fluid temperature: 40 °C

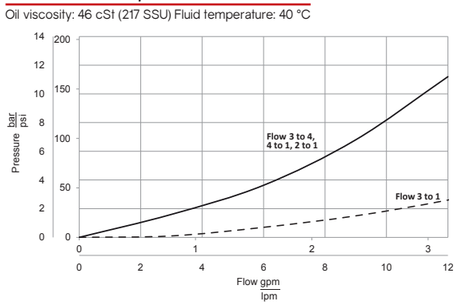

Performance graph

Oil viscosity: 46 cSt (217 SSU) Fluid temperature: 40 °C

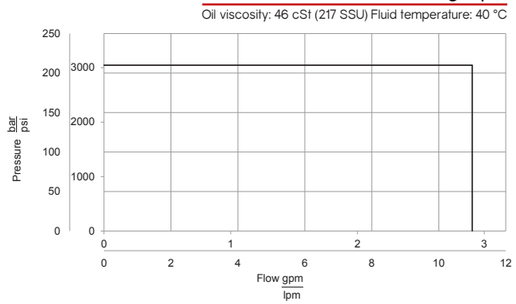

E08N-4C0

Inches
Millimeters

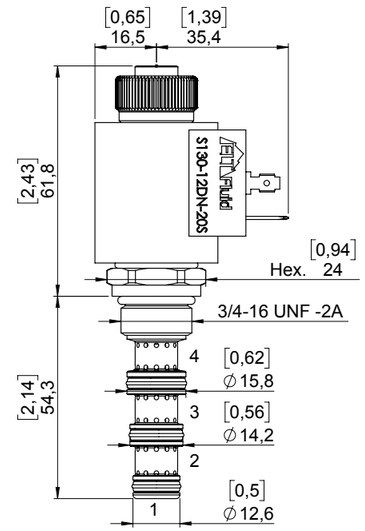

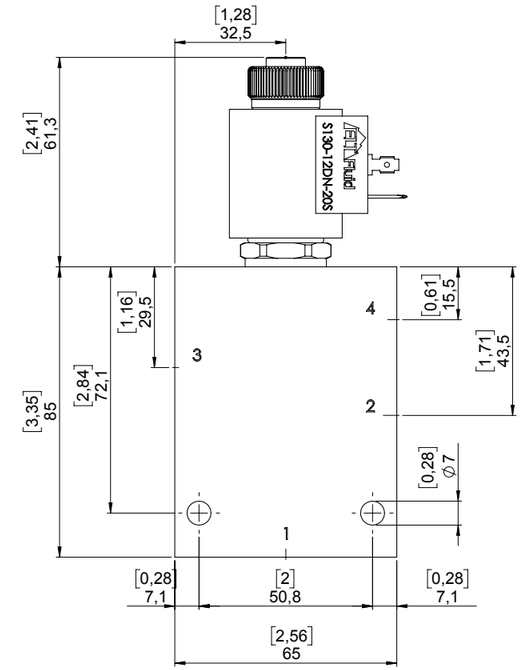

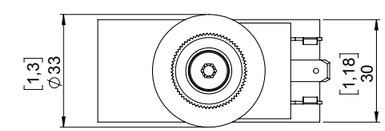

STANDARD HOUSING

Ordering code:	See page 9.02.005
Material:*	Aluminium/Steel Max working pressure for aluminum body: 210 bar Max working pressure for steel body: 350 bar

**Note:* To correctly select the material, in relation to application, see page S.003.

Ordering code

E08N-4C0 - - -

Seals
- None (std. NBR+Polyurethane)
- **Y**- Polyurethane
- For other options contact Sales dept.

*Options**
- None (std. without override)
- **P**- Push
- **PT**- Push and twist
- **SV**- Screw in

Connector
- **DN**- Din
- **DU**- Deutsch
- **AM**- Amp Junior

Voltage
- None (std. without coil)
- **12**- Vdc
- **24**- Vdc

Material std. housing
- **A**- Aluminium
- **S**- Steel

Housing size ports
- None (std. only cartridge)
- **2B**- 1/4" BSP
- **3B**- 3/8" BSP
- **2S**- SAE 6
- **3S**- SAE 8

**Note:* Information about manual override is available at page S.001

E08N-4C1

Solenoid valve 4 ways 2 positions, direct acting spool type

Description
Electric cartridge valve on/off, spool type, 4 ways, 2 positions.

Operation mode
A spring holds the spool in position so that the oil flow is allowed in all ports (1-2-3-4).
When the solenoid is energized, the spool is pulled to permit connection of 3 with 2 and 4 with 1.

GENERAL DATA
Weight without coil: 0,16 Kg (0,36 lbs).
Ambient temperature range: -30 °C a 60 °C with standard seals (NBR).
Max. proof pressure ports 2-3-4: 300 bar (4.350 psi).
Max. proof pressure port 1: 210 bar (3.045 psi).
Flow Max: 11 l/min (2,9 gpm).
Cartridge materials: high strength steel, internal parts hardened and grinding.

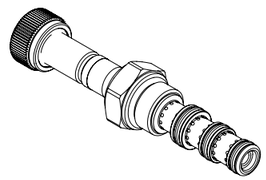

Drawing

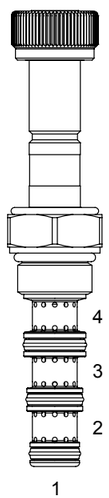

Hydraulic symbol

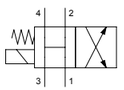

TECHNICAL DATA

HYDRAULIC

Max. working pressure:	210 bar (3.045 psi)
Flow rate:	11 l/min (2,9 gpm)
Fluid: *Viscosity:*	Mineral based oil From 15cSt to 250 cSt
Leakage:	350 cc/min P max. 210 bar (3.045 psi)
Standard seals:	O-ring NBR Seals Polyurethane
Cavity:	SCN0840
Installation torque:	27 Nm
Coil nut torque:	2 Nm
Max contamination level:	NAS 8 ISO 4406 19/17/14
Fluid temperature range:	From -20 °C to +80 °C
Seal kit std.:	5AG0043

ELECTRIC

Type of voltage:	DC
Insulation index:	H
Nominal voltage:	+/- 10 %
Power at 20 °C:	20,5 W
ED:*	100% with ambient temperature range -20 °C +40 °C
Coil code: *(see page 9.01.002)*	S130-20S

**Note:* For temperature or special conditions contact our sales department.

Pressure drop

Oil viscosity: 46 cSt (217 SSU) Fluid temperature: 40 °C

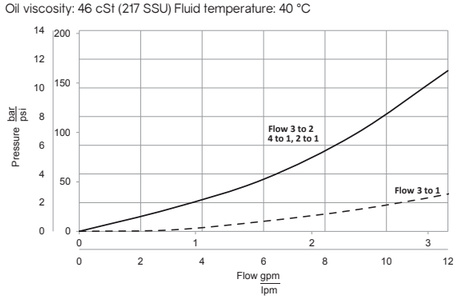

Performance graph

Oil viscosity: 46 cSt (217 SSU) Fluid temperature: 40 °C

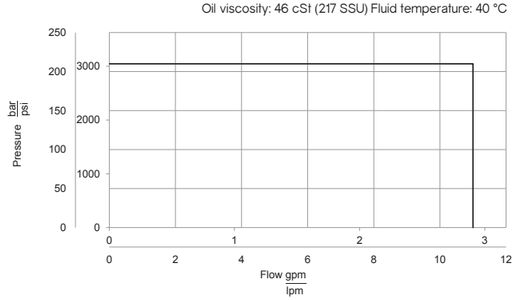

E08N-4C1

Inches
Millimeters

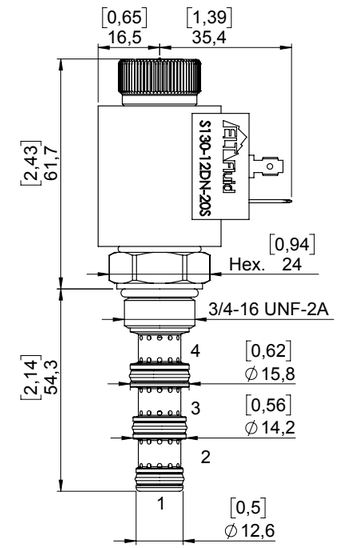

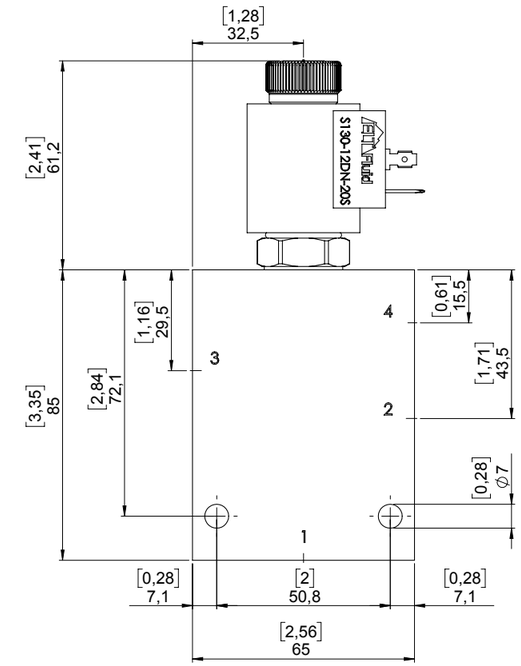

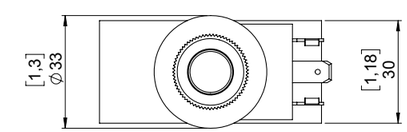

STANDARD HOUSING

Ordering code:	See page 9.02.005
Material:*	Aluminium/Steel Max working pressure for aluminum body: 210 bar Max working pressure for steel body: 350 bar

**Note:* To correctly select the material, in relation to application, see page S.003.

Ordering code

E08N-4C1 - -

Seals
- None (std. NBR+Polyurethane)
- **Y**- Polyurethane
- For other options contact Sales dept.

*Options**
- None (std. without override)
- **S**- Screw out

Connector
- **DN**- Din
- **DU**- Deutsch
- **AM**- Amp Junior

Voltage
- None (std. without coil)
- **12**- Vdc
- **24**- Vdc

Material std. housing
- **A**- Aluminium
- **S**- Steel

Housing size ports
- None (std. only cartridge)
- **2B**- 1/4" BSP
- **3B**- 3/8" BSP
- **2S**- SAE 6
- **3S**- SAE 8

**Note:* Information about manual override is available at page S.001

E08N-4D0

Solenoid valve 4 ways 2 positions, direct acting spool type

Description
Electric cartridge valve on/off, spool type, 4 ways, 2 positions.

Operation mode
A spring holds the spool in position so that the oil flow is free from 3 to 1, while 2 and 4 are close.
When the solenoid is energized, the spool is pulled to allow connection of 3 with 2 and 4 with 1.

GENERAL DATA
Weight without coil: 0,16 Kg (0,36 lbs).
Ambient temperature range: -30 °C a 60 °C with standard seals (NBR).
Max. proof pressure ports 2-3-4: 300 bar (4.350 psi).
Max. proof pressure port 1: 210 bar (3.045 psi).
Flow Max: 11 l/min (2,9 gpm).
Cartridge materials: high strength steel, internal parts hardened and grinding.

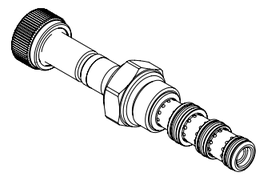

Drawing

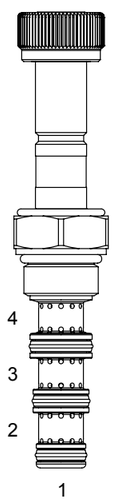

Hydraulic symbol

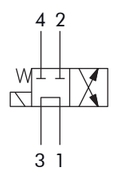

TECHNICAL DATA

HYDRAULIC

Max. working pressure:	210 bar (3.045 psi)
Flow rate:	11 l/min (2,9 gpm)
Fluid: *Viscosity:*	Mineral based oil From 15cSt to 250 cSt
Leakage:	350 cc/min P max. 210 bar (3.045 psi)
Standard seals:	O-ring NBR Seals Polyurethane
Cavity:	SCN0840
Installation torque:	27 Nm
Coil nut torque:	2 Nm
Max contamination level:	NAS 8 ISO 4406 19/17/14
Fluid temperature range:	From -20 °C to +80 °C
Seal kit std.:	5AG0043

ELECTRIC

Type of voltage:	DC
Insulation index:	H
Nominal voltage:	+/- 10 %
Power at 20 °C:	20,5 W
ED:*	100% with ambient temperature range -20 °C +40 °C
Coil code: *(see page 9.01.002)*	S130-20S

**Note:* For temperature or special conditions contact our sales department.

Pressure drop
Oil viscosity: 46 cSt (217 SSU) Fluid temperature: 40 °C

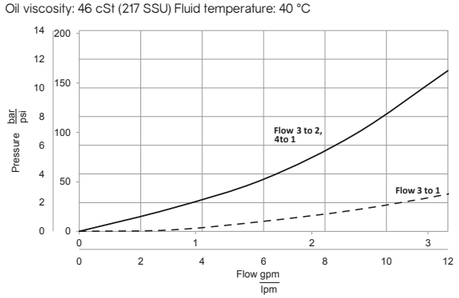

Performance graph
Oil viscosity: 46 cSt (217 SSU) Fluid temperature: 40 °C

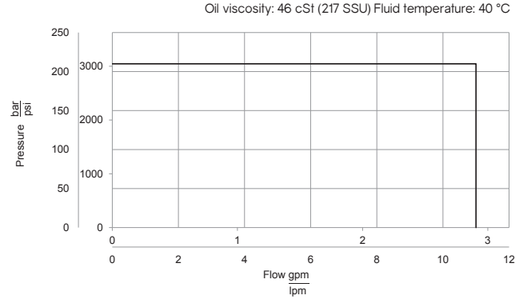

E08N-4D0

Inches
Millimeters

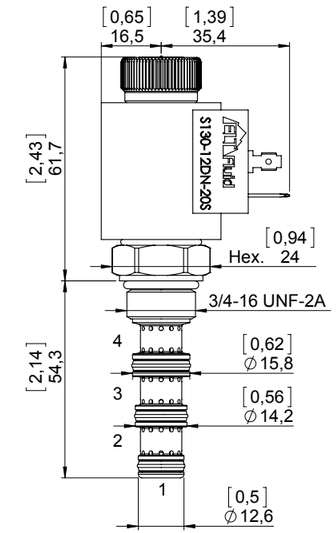

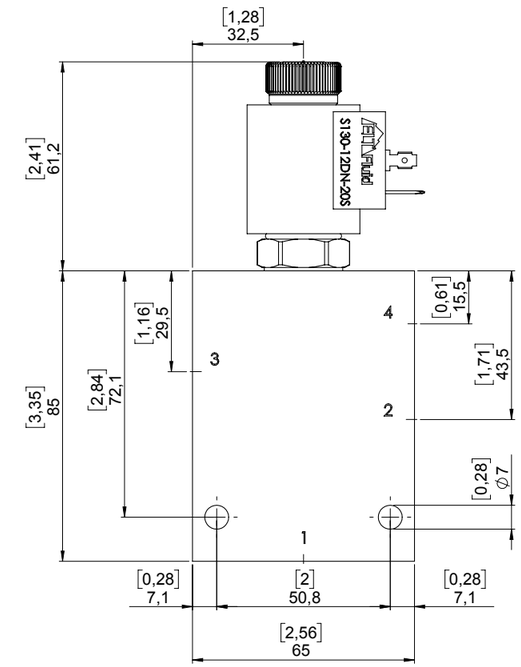

STANDARD HOUSING

Ordering code:	See page 9.02.005
Material:*	Aluminium/Steel Max working pressure for aluminum body: 210 bar Max working pressure for steel body: 350 bar

**Note:* To correctly select the material, in relation to application, see page S.003.

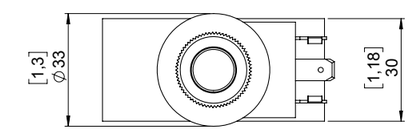

Ordering code

E08N-4D0 - -

Seals
- None (std. NBR+Polyurethane)
- **Y**- Polyurethane
- For other options contact Sales dept.

*Options**
- None (std. without override)
- **S**- Screw out

Connector
- **DN**- Din
- **DU**- Deutsch
- **AM**- Amp Junior

Voltage
- None (std. without coil)
- **12**- Vdc
- **24**- Vdc

Material std. housing
- **A**- Aluminium
- **S**- Steel

Housing size ports
- None (std. only cartridge)
- **2B**- 1/4" BSP
- **3B**- 3/8" BSP
- **2S**- SAE 6
- **3S**- SAE 8

**Note:* Information about manual override is available at page S.001

E08N-4D1

Solenoid valve 4 ways 2 positions, direct acting spool type

Description
Electric cartridge valve on/off spool type, 4 ways, 2 positions.

Operation mode
A spring holds the spool in position so that the oil flow is free from 3 to 1, while 2 and 4 are close.
When the solenoid is energized, the spool is pushed to permit connection of 3 with 4 and 2 with 1.

GENERAL DATA
Weight without coil: 0,16 Kg (0,36 lbs).
Ambient temperature range: -30 °C a 60 °C with standard seals (NBR).
Max. proof pressure ports 2-3-4: 300 bar (4.350 psi).
Max. proof pressure port 1: 210 bar (3.045 psi).
Flow Max: 11 l/min (2,9 gpm).
Cartridge materials: high strength steel, internal parts hardened and grinding.

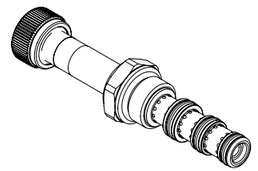

Drawing

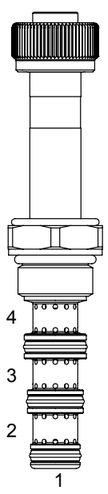

Hydraulic symbol

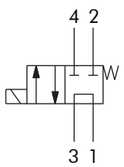

TECHNICAL DATA

HYDRAULIC

Max. working pressure:	210 bar (3.045 psi)
Flow rate:	11 l/min (2,9 gpm)
Fluid: *Viscosity:*	Mineral based oil From 15cSt to 250 cSt
Leakage:	350 cc/min P max. 210 bar (3.045 psi)
Standard seals:	O-ring NBR Seals Polyurethane
Cavity:	SCN0840
Installation torque:	27 Nm
Coil nut torque:	2 Nm
Max contamination level:	NAS 8 ISO 4406 19/17/14
Fluid temperature range:	From -20 °C to +80 °C
Seal kit std.:	5AG0043

ELECTRIC

Type of voltage:	DC
Insulation index:	H
Nominal voltage:	+/- 10 %
Power at 20 °C:	20,5 W
ED:*	100% with ambient temperature range -20 °C +40 °C
Coil code: *(see page 9.01.002)*	S130-20S

**Note:* For temperature or special conditions contact our sales department.

Pressure drop

Oil viscosity: 46 cSt (217 SSU) Fluid temperature: 40 °C

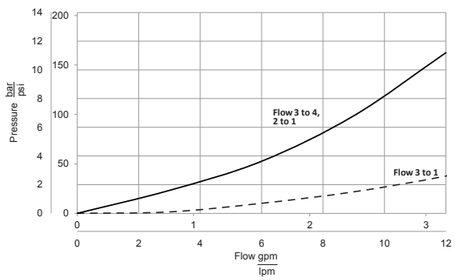

Performance graph

Oil viscosity: 46 cSt (217 SSU) Fluid temperature: 40 °C

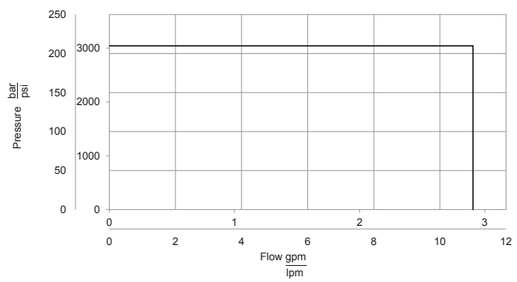

E08N-4D1

Inches
Millimeters

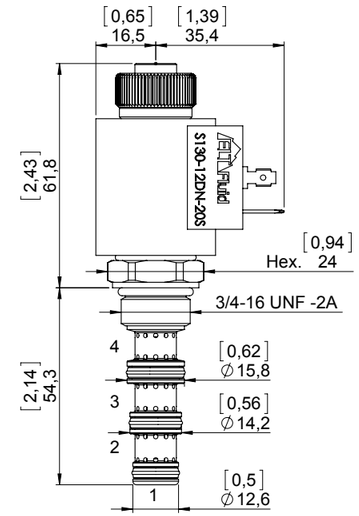

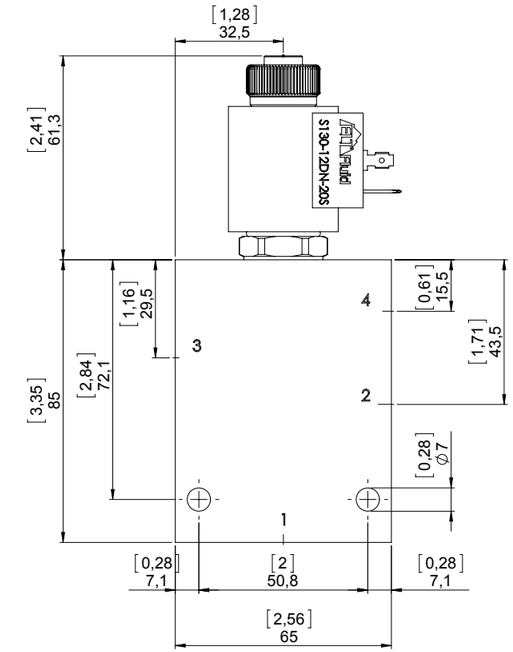

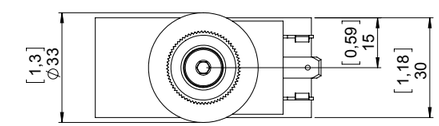

STANDARD HOUSING

Ordering code:	See page 9.02.005
Material:*	Aluminium/Steel Max working pressure for aluminum body: 210 bar Max working pressure for steel body: 350 bar

**Note:* To correctly select the material, in relation to application, see page S.003.

Ordering code

E08N-4D1 - -

Seals
- None (std. NBR+Polyurethane)
- **Y**- Polyurethane
- For other options contact Sales dept.

*Options**
- None (std. without override)
- **P**- Push
- **PT**- Push and twist
- **SV**- Screw in

Connector
- **DN**- Din
- **DU**- Deutsch
- **AM**- Amp Junior

Voltage
- None (std. without coil)
- **12**- Vdc
- **24**- Vdc

Material std. housing
- **A**- Aluminium
- **S**- Steel

Housing size ports
- None (std. only cartridge)
- **2B**- 1/4" BSP
- **3B**- 3/8" BSP
- **2S**- SAE 6
- **3S**- SAE 8

**Note:* Information about manual override is available at page S.001

E08N-4U1

Solenoid valve 4 ways 2 positions, direct acting spool type

Description

Electric cartridge valve on/off, spool type, 4 ways, 2 positions, direct acting spool.

Operation mode

A spring holds the spool in position so that the oil flow is allowed in ports 4 with 2 and 1 while 3 closed.
When the solenoid is energized, the spool is shifted (pushed) to allow connection of 3 with 2 while 1 and 5 are closed.

GENERAL DATA

Weight without coil: 0,16 Kg (0,36 lbs).
Ambient temperature range: -30 °C a 60 °C with standard seals (NBR).
Max. proof pressure ports 2-3-4: 300 bar (4.350 psi).
Max. proof pressure port 1: 210 bar (3.045 psi).
Flow Max: 12 l/min (3,2 gpm).
Cartridge materials: high strength steel, internal parts hardened and grinding.

Drawing

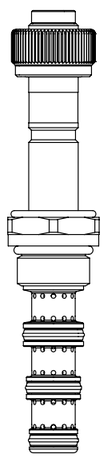

Hydraulic symbol

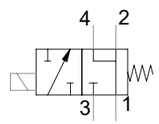

TECHNICAL DATA

HYDRAULIC	
Max. working pressure:	210 bar (3.045 psi)
Flow rate:	12 l/min (3,2 gpm)
Fluid: *Viscosity:*	Mineral based oil From 15cSt to 250 cSt
Leakage:	160 cc/min P max. 210 bar (3.045 psi)
Standard seals:	O-ring NBR Seals Polyurethane
Cavity:	SCN0840
Installation torque:	27 Nm
Coil nut torque:	2 Nm
Max contamination level:	NAS 8 ISO 4406 19/17/14
Fluid temperature range:	From -20 °C to +80 °C
Seal kit std.:	5AG0043
ELECTRIC	
Type of voltage:	DC
Insulation index:	H
Nominal voltage:	+/- 10 %
Power at 20 °C:	20,5 W
ED:*	100% with ambient temperature range -20 °C +40 °C
Coil code: *(see page 9.01.002)*	S130-20S

**Note:* For temperature or special conditions contact our sales department.

Pressure drop

Oil viscosity: 46 cSt (217 SSU) Fluid temperature: 40 °C

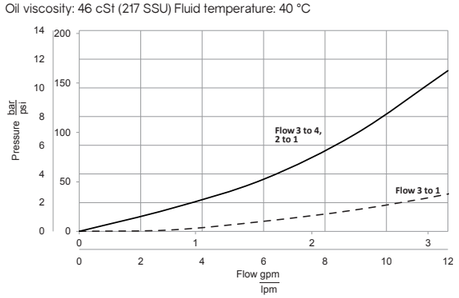

Performance graph

Oil viscosity: 46 cSt (217 SSU) Fluid temperature: 40 °C

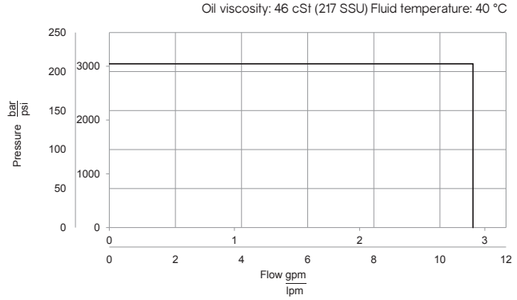

E08N-4U1

Inches
Millimeters

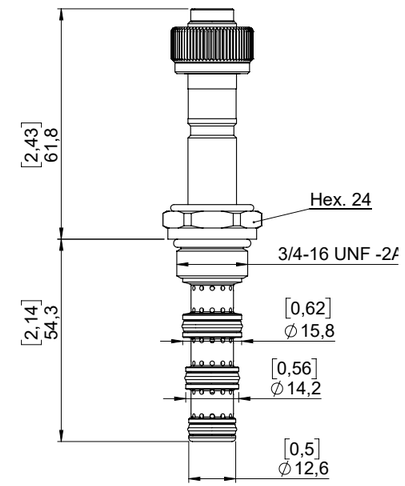

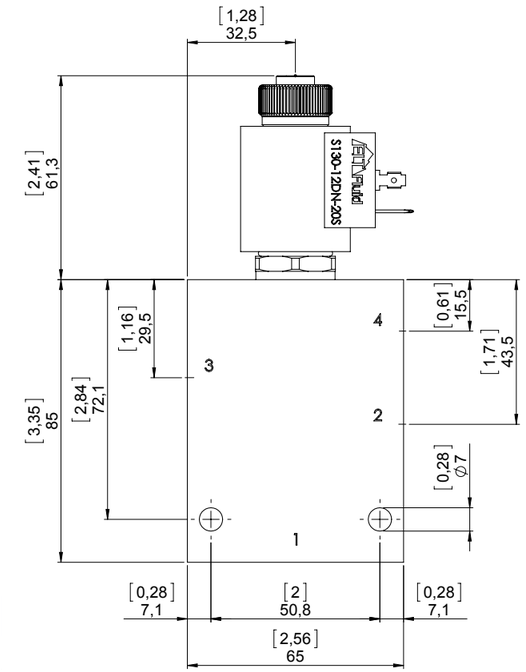

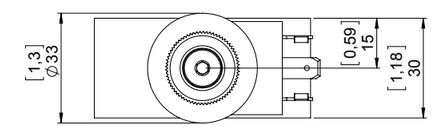

STANDARD HOUSING

Ordering code:	See page 9.02.005
Material:*	Aluminium/Steel Max working pressure for aluminum body: 210 bar Max working pressure for steel body: 350 bar

**Note:* To correctly select the material, in relation to application, see page S.003.

Ordering code

E08N-4U1 - -

Seals
- None (std. NBR+Polyurethane)
- **Y**- Polyurethane
- For other options contact Sales dept.

Options*
- None (std. without override)
- **P**- Push
- **PT**- Push and twist
- **SV**- Screw in

Connector
- **DN**- Din
- **DU**- Deutsch
- **AM**- Amp Junior

Voltage
- None (std. without coil)
- **12**- Vdc
- **24**- Vdc

Material std. housing
- **A**- Aluminium
- **S**- Steel

Housing size ports
- None (std. only cartridge)
- **2B**- 1/4" BSP
- **3B**- 3/8" BSP
- **2S**- SAE 6
- **3S**- SAE 8

**Note:* Information about manual override is available at page S.001

E08N-4X0

Solenoid valve 4 ways 2 positions, direct acting spool type

Description
Electric cartridge valve on/off, spool type, 4 ways, 2 positions.

Operation mode
A spring holds the spool in position so that the oil flow is allowed in ports: 4 with 1 and 3 with 2.
When the solenoid is energized, the spool is pulled to allow connection of 3 with 4 and 2 with 1.

GENERAL DATA
Weight without coil: 0,16 Kg (0,36 lbs).
Ambient temperature range: -30 °C a 60 °C with standard seals (NBR).
Max. proof pressure: 300 bar (4.350 psi).
Flow Max: 12 l/min (3,2 gpm).
Cartridge materials: high strength steel, internal parts hardened and grinding.

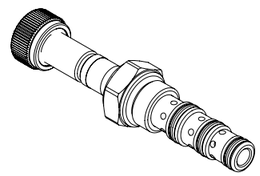

Drawing

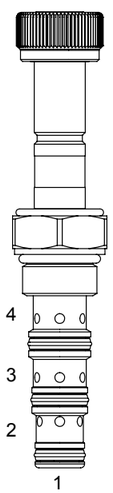

Hydraulic symbol

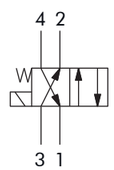

TECHNICAL DATA

HYDRAULIC

Max. working pressure:	210 bar (3.045 psi)
Flow rate:	12 l/min (3,2 gpm)
Fluid: *Viscosity:*	Mineral based oil From 15cSt to 250 cSt
Leakage:	160 cc/min P max. 210 bar (3.045 psi)
Standard seals:	O-ring NBR Seals Polyurethane
Cavity:	SCN0840
Installation torque:	27 Nm
Coil nut torque:	2 Nm
Max contamination level:	NAS 8 ISO 4406 19/17/14
Fluid temperature range:	From -20 °C to +80 °C
Seal kit std.:	5AG0043

ELECTRIC

Type of voltage:	DC
Insulation index:	H
Nominal voltage:	+/- 10 %
Power at 20 °C:	20,5 W
ED:*	100% with ambient temperature range -20 °C +40 °C
Coil code: *(see page 9.01.002)*	S130-20S

**Note:* For temperature or special conditions contact our sales department.

Pressure drop

Oil viscosity: 46 cSt (217 SSU) Fluid temperature: 40 °C

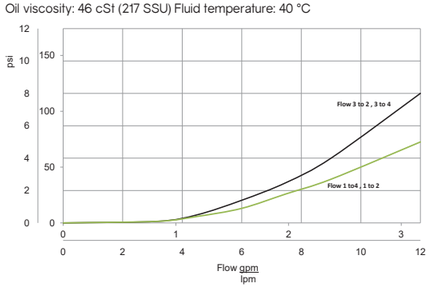

Performance graph

Oil viscosity: 46 cSt (217 SSU) Fluid temperature: 40 °C

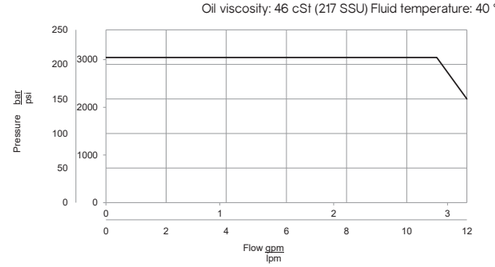

E08N-4X0

Inches
Millimeters

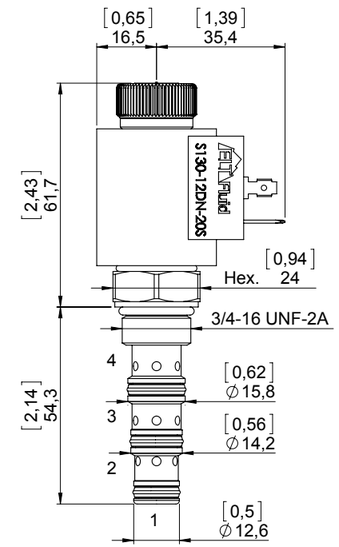

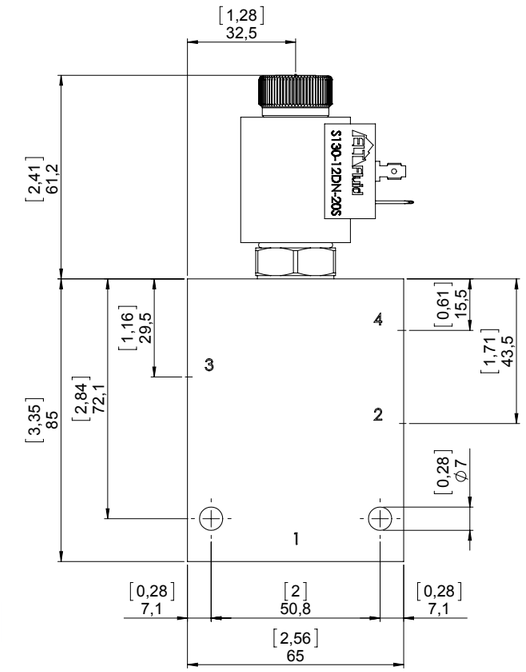

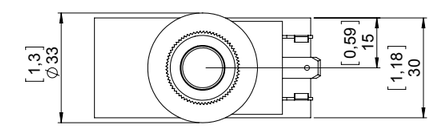

STANDARD HOUSING

Ordering code:	See page 9.02.005
Material:*	Aluminium/Steel Max working pressure for aluminum body: 210 bar Max working pressure for steel body: 350 bar

**Note:* To correctly select the material, in relation to application, see page S.003.

Ordering code

E08N-4X0 - -

Seals
- None (std. NBR+Polyurethane)
- **Y**- Polyurethane
- For other options contact Sales dept.

*Options**
- None (std. without override)
- **S**- Screw out

Connector
- **DN**- Din
- **DU**- Deutsch
- **AM**- Amp Junior

Voltage
- None (std. without coil)
- **12**- Vdc
- **24**- Vdc

Material std. housing
- **A**- Aluminium
- **S**- Steel

Housing size ports
- None (std. only cartridge)
- **2B**- 1/4" BSP
- **3B**- 3/8" BSP
- **2S**- SAE 6
- **3S**- SAE 8

**Note:* Information about manual override is available at page S.001

E08N-4X1

Solenoid valve 4 ways 2 positions, direct acting spool type

Description
Electric cartridge valve on/off, spool type, 4 ways, 2 positions.

Operation mode
A spring holds the spool in position so that the oil flow is allowed in ports: 3 with 4 and 2 with 1.
When the solenoid is energized, the spool is pushed to allow connection of 4 with 1 and 3 with 2.

GENERAL DATA
Weight without coil: 0,16 Kg (0,36 lbs).
Ambient temperature range: -30 C° a 60 C° with standard seals (NBR).
Max. proof pressure: 300 bar (4.350 psi).
Flow Max: 12 l/min (3,2 gpm).
Cartridge materials: high strength steel, internal parts hardened and grinding.

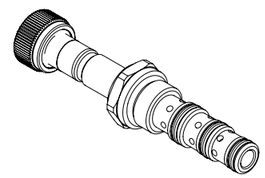

TECHNICAL DATA

HYDRAULIC	
Max. working pressure:	210 bar (3.045 psi)
Flow rate:	12 l/min (3,2 gpm)
Fluid: *Viscosity:*	Mineral based oil From 15cSt to 250 cSt
Leakage:	160 cc/min P max. 210 bar (3.045 psi)
Standard seals:	O-ring NBR Seals Polyurethane
Cavity:	SCN0840
Installation torque:	27 Nm
Coil nut torque:	2 Nm
Max contamination level:	NAS 8 ISO 4406 19/17/14
Fluid temperature range:	From -20 °C to +80 °C
Seal kit std.:	5AG0043
ELECTRIC	
Type of voltage:	DC
Insulation index:	H
Nominal voltage:	+/- 10 %
Power at 20 °C:	20,5 W
ED:*	100% with ambient temperature range -20 °C +40 °C
Coil code: *(see page 9.01.002)*	S130-20S

**Note:* For temperature or special conditions contact our sales department.

Drawing

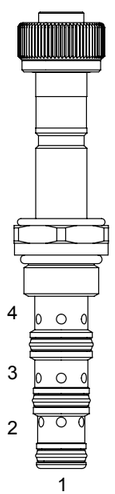

Hydraulic symbol

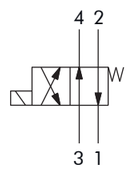

Pressure drop

Oil viscosity: 46 cSt (217 SSU) Fluid temperature: 40 °C

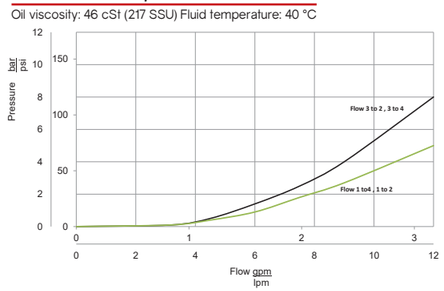

Performance graph

Oil viscosity: 46 cSt (217 SSU) Fluid temperature: 40 °C

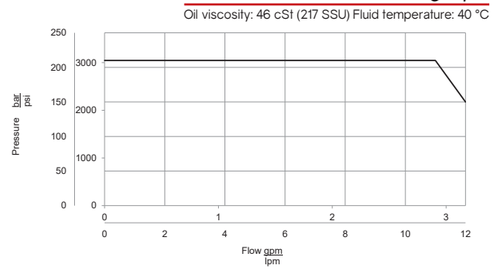

E08N-4X1

Inches
Millimeters

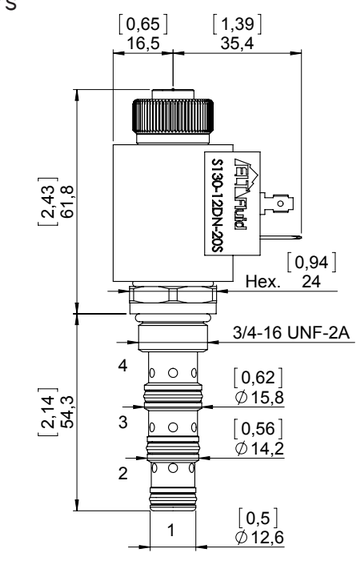

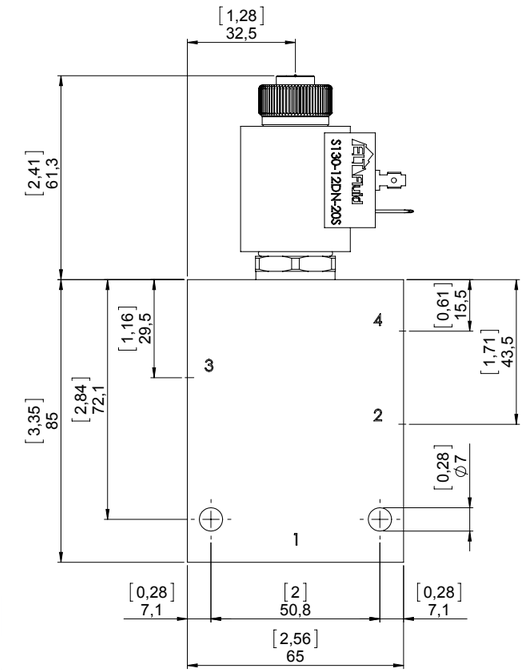

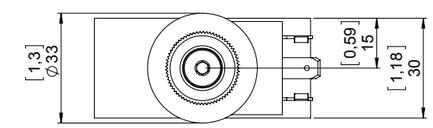

STANDARD HOUSING

Ordering code:	See page 9.02.005
Material:*	Aluminium/Steel Max working pressure for aluminum body: 210 bar Max working pressure for steel body: 350 bar

**Note:* To correctly select the material, in relation to application, see page S.003.

Ordering code

E08N-4X1 - -

Seals
- None (std. NBR+Polyurethane)
- **Y**- Polyurethane
- For other options contact Sales dept.

*Options**
- None (std. without override)
- **P**- Push
- **PT**- Push and twist
- **SV**- Screw in

Connector
- **DN**- Din
- **DU**- Deutsch
- **AM**- Amp Junior

Voltage
- None (std. without coil)
- **12**- Vdc
- **24**- Vdc

Material std. housing
- **A**- Aluminium
- **S**- Steel

Housing size ports
- None (std. only cartridge)
- **2B**- 1/4" BSP
- **3B**- 3/8" BSP
- **2S**- SAE 6
- **3S**- SAE 8

**Note:* Information about manual override is available at page S.001

E10N-4A0

Solenoid valve 4 ways 2 positions, direct acting spool type

Description
Electric cartridge valve on/off, spool type, 4 ways, 2 positions.

Operation mode
A spring holds the spool in position so that the oil flow is stopped in all ports (1-2-3-4).
When the solenoid is energized, the spool is pulled to allow connection of 3 with 4 and 2 with 1.

GENERAL DATA
Weight without coil: 0,32 Kg (0,7 lbs).
Ambient temperature range: -30 °C a 60 °C with standard seals (NBR).
Max. proof pressure ports 2-3-4: 300 bar (4.350 psi).
Max. proof pressure port 1: 210 bar (3.045 psi).
Flow Max: 20 l/min (5,3 gpm).
Cartridge materials: high strength steel, internal parts hardened and grinding.

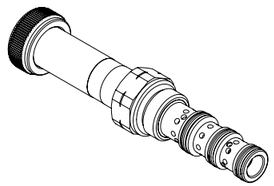

TECHNICAL DATA

HYDRAULIC	
Max. working pressure:	210 bar (3.045 psi)
Flow rate:	See Performance graph
Fluid: *Viscosity:*	Mineral based oil From 15cSt to 250 cSt
Leakage:	160 cc/min P max. 210 bar (3.045 psi)
Standard seals:	O-ring NBR Seals Polyurethane
Cavity:	SCN1040
Installation torque:	35 Nm
Coil nut torque:	5 Nm
Max contamination level:	NAS 8 ISO 4406 19/17/14
Fluid temperature range:	From -20 °C to +80 °C
Seal kit std.:	5AG0044
ELECTRIC	
Type of voltage:	DC
Insulation index:	H
Nominal voltage:	+/- 10 %
Power at 20 °C:	24 W
ED:*	100% with ambient temperature range -20 °C +40 °C
Coil code: *(see page 9.02.001)*	S190-24S

**Note:* For temperature or special conditions contact our sales department.

Drawing

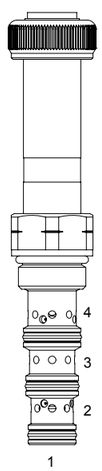

Hydraulic symbol

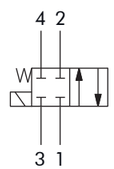

Pressure drop

Oil viscosity: 46 cSt (217 SSU) Fluid temperature: 40 °C

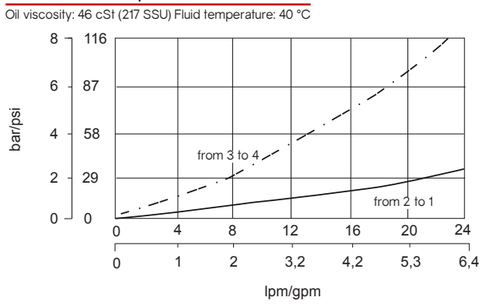

Performance graph

Oil viscosity: 46 cSt (217 SSU) Fluid temperature: 40 °C

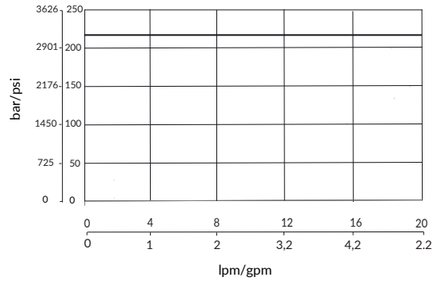

E10N-4A0

Inches
Millimeters

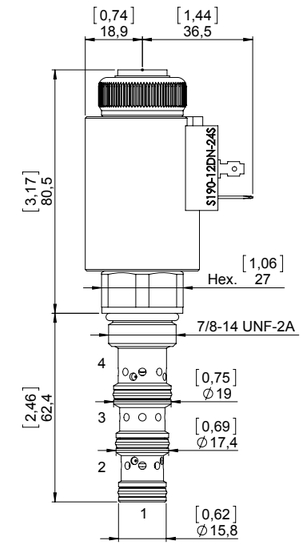

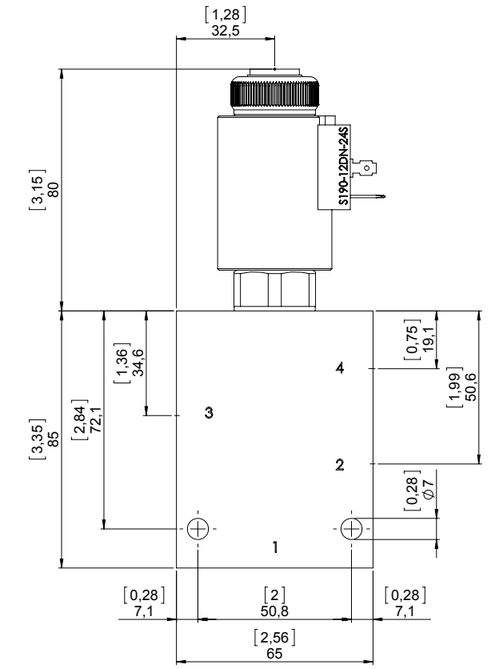

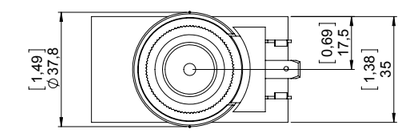

STANDARD HOUSING

Ordering code:	See page 9.03.005
Material:*	Aluminium/Steel Max working pressure for aluminum body: 210 bar Max working pressure for steel body: 350 bar

**Note:* To correctly select the material, in relation to application, see page S.003.

Ordering code

E10N-4A0 - -

Seals
- None (std. NBR)
- **Y**- Polyurethane
- For other options contact Sales dept.

*Options**
- None (std. without override)
- **S**- Screw out

Connector
- **DN**- Din
- **DU**- Deutsch
- **AM**- Amp Junior

Voltage
- None (std. without coil)
- **12**- Vdc
- **24**- Vdc

Material std. housing
- **A**- Aluminium
- **S**- Steel

Housing size ports
- None (std. only cartridge)
- **3B**- 3/8" BSP
- **4B**- 1/2" BSP
- **3S**- SAE 8
- **4S**- SAE 10

**Note:* Information about manual override is available at page S.001

E10N-4A1

Solenoid valve 4 ways 2 positions, direct acting spool type

Description
Electric cartridge valve on/off, spool type, 4 ways, 2 positions.

Operation mode
A spring holds the spool in position so that the oil flow is stopped in all ports (1-2-3-4).
When the solenoid is energized, the spool is pushed to permit connection of 3 with 2 and 4 with 1.

GENERAL DATA
Weight without coil: 0,31 Kg (0,68 lbs).
Ambient temperature range: -30 °C a 60 °C with standard seals (NBR).
Max. proof pressure ports 2-3-4: 300 bar (4.350 psi).
Max. proof pressure port 1: 210 bar (3.045 psi).
Flow Max: 20 l/min (5,3 gpm).
Cartridge materials: high strength steel, internal parts hardened and grinding.

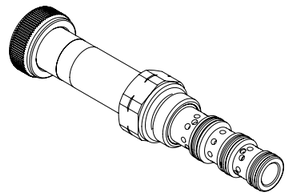

Drawing

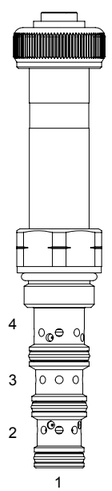

Hydraulic symbol

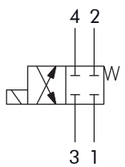

TECHNICAL DATA

HYDRAULIC

Max. working pressure:	210 bar (3.045 psi)
Flow rate:	See Performance graph
Fluid: *Viscosity:*	Mineral based oil From 15cSt to 250 cSt
Leakage:	160 cc/min P max. 210 bar (3.045 psi)
Standard seals:	O-ring NBR Seals Polyurethane
Cavity:	SCN1040
Installation torque:	35 Nm
Coil nut torque:	5 Nm
Max contamination level:	NAS 8 ISO 4406 19/17/14
Fluid temperature range:	From -20 °C to +80 °C
Seal kit std.:	5AG0044

ELECTRIC

Type of voltage:	DC
Insulation index:	H
Nominal voltage:	+/- 10 %
Power at 20 °C:	24 W
ED:*	100% with ambient temperature range -20 °C +40 °C
Coil code: *(see page 9.02.001)*	S190-24S

**Note:* For temperature or special conditions contact our sales department.

Pressure drop

Oil viscosity: 46 cSt (217 SSU) Fluid temperature: 40 °C

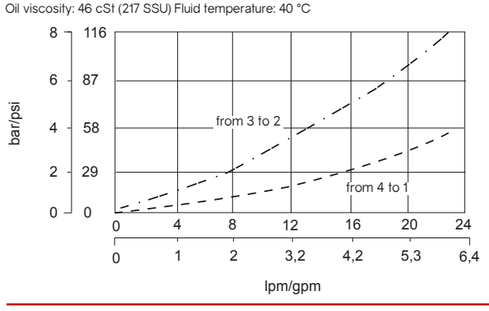

Performance graph

Oil viscosity: 46 cSt (217 SSU) Fluid temperature: 40 °C

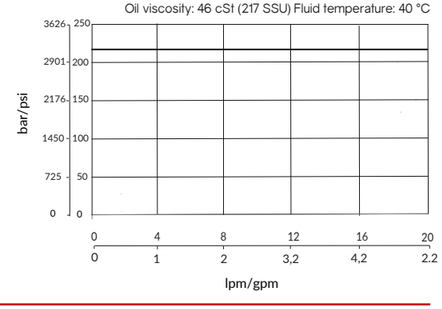

E10N-4A1

Inches
Millimeters

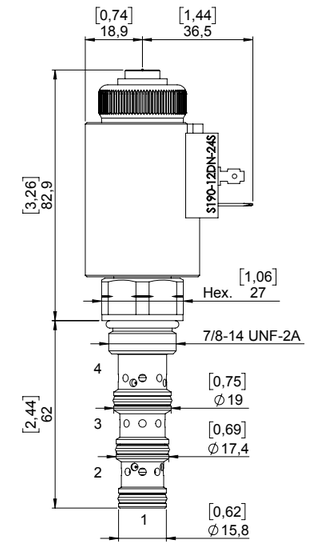

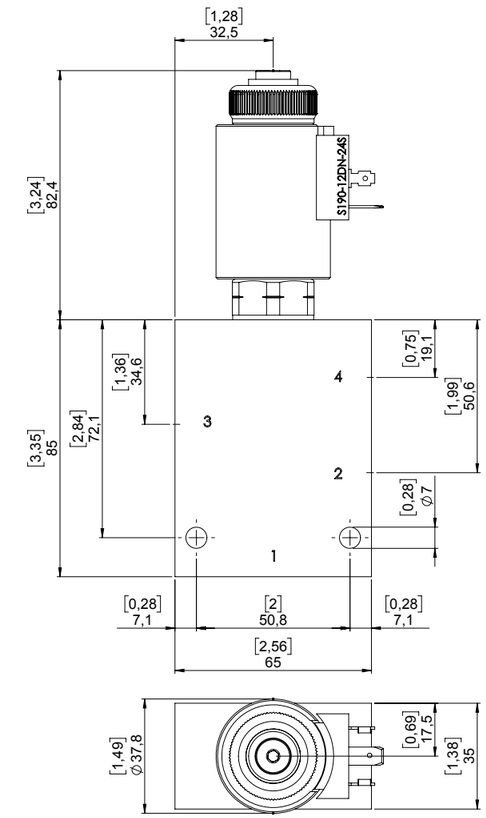

STANDARD HOUSING

Ordering code:	See page 9.03.005
Material:*	Aluminium/Steel Max working pressure for aluminum body: 210 bar Max working pressure for steel body: 350 bar

**Note:* To correctly select the material, in relation to application, see page S.003.

Ordering code

E10N-4A1 - -

Seals
- None (std. NBR)
- **Y**- Polyurethane
- For other options contact Sales dept.

*Options**
- None (std. without override)
- **P**- Push
- **PT**- Push and twist
- **SV**- Screw In

Connector
- **DN**- Din
- **DU**- Deutsch
- **AM**- Amp Junior

Voltage
- None (std. without coil)
- **12**- Vdc
- **24**- Vdc

Material std. housing
- **A**- Aluminium
- **S**- Steel

Housing size ports
- None (std. only cartridge)
- **3B**- 3/8" BSP
- **4B**- 1/2" BSP
- **3S**- SAE 8
- **4S**- SAE 10

**Note:* Information about manual override is available at page S.001

E10N-4B0

Solenoid valve 4 ways 2 positions, direct acting spool type

Description
Electric cartridge valve on/off, spool type, 4 ways, 2 positions.

Operation mode
A spring holds the spool in position so that the oil flow is stopped in 3 and partially free from 2 and 4 to 1.
When the solenoid is energized, the spool is pulled to allow connection of 3 with 4 and 2 with 1.

GENERAL DATA
Weight without coil: 0,32 Kg (0,7 lbs).
Ambient temperature range: -30 °C a 60 °C with standard seals (NBR).
Max. proof pressure ports 2-3-4: 300 bar (4.350 psi).
Max. proof pressure port 1: 210 bar (3.045 psi).
Flow Max: 20 l/min (5,3 gpm).
Cartridge materials: high strength steel, internal parts hardened and grinding.

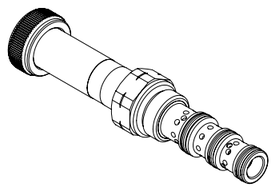

TECHNICAL DATA

HYDRAULIC

Max. working pressure:	210 bar (3.045 psi)
Flow rate:	See Performance graph
Fluid: *Viscosity:*	Mineral based oil From 15cSt to 250 cSt
Leakage:	160 cc/min P max. 210 bar (3.045 psi)
Standard seals:	O-ring NBR Seals Polyurethane
Cavity:	SCN1040
Installation torque:	35 Nm
Coil nut torque:	5 Nm
Max contamination level:	NAS 8 ISO 4406 19/17/14
Fluid temperature range:	From -20 °C to +80 °C
Seal kit std.:	5AG0044

ELECTRIC

Type of voltage:	DC
Insulation index:	H
Nominal voltage:	+/- 10 %
Power at 20 °C:	24 W
ED:*	100% with ambient temperature range -20 °C +40 °C
Coil code: *(see page 9.02.001)*	S190-24S

**Note:* For temperature or special conditions contact our sales department.

Drawing

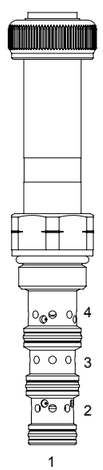

Hydraulic symbol

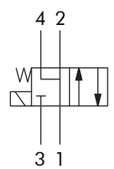

Pressure drop

Oil viscosity: 46 cSt (217 SSU) Fluid temperature: 40 °C

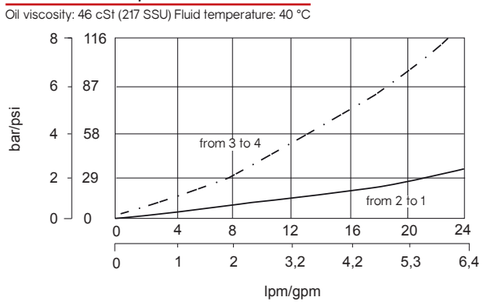

Performance graph

Oil viscosity: 46 cSt (217 SSU) Fluid temperature: 40 °C

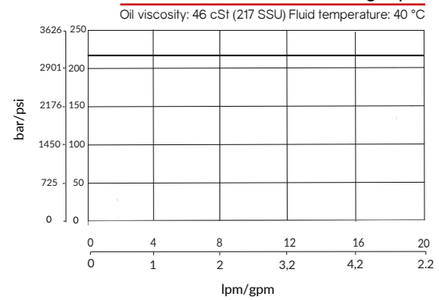

E10N-4B0

Inches
Millimeters

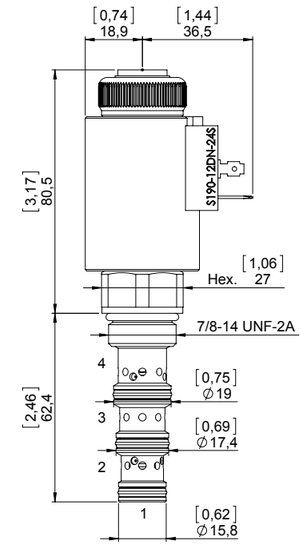

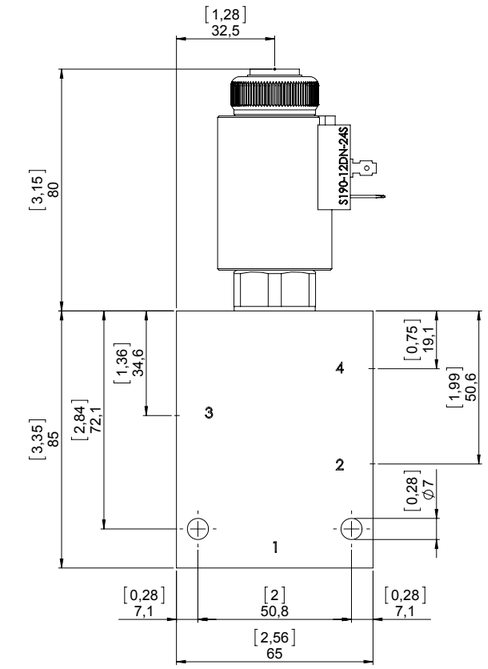

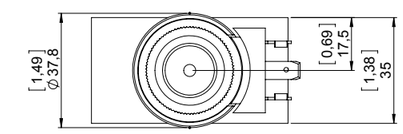

STANDARD HOUSING

Ordering code:	See page 9.03.005
Material:*	Aluminium/Steel Max working pressure for aluminum body: 210 bar Max working pressure for steel body: 350 bar

**Note:* To correctly select the material, in relation to application, see page S.003.

Ordering code

E10N-4B0 - -

Seals
- None (std. NBR)
- **Y**- Polyurethane
- For other options contact Sales dept.

*Options**
- None (std. without override)
- **S**- Screw out

Connector
- **DN**- Din
- **DU**- Deutsch
- **AM**- Amp Junior

Voltage
- None (std. without coil)
- **12**- Vdc
- **24**- Vdc

Material std. housing
- **A**- Aluminium
- **S**- Steel

Housing size ports
- None (std. only cartridge)
- **3B**- 3/8" BSP
- **4B**- 1/2" BSP
- **3S**- SAE 8
- **4S**- SAE 10

**Note:* Information about manual override is available at page S.001

E10N-4B1

Solenoid valve 4 ways 2 positions, direct acting spool type

Description
Electric cartridge valve on/off, spool type, 4 ways, 2 positions.

Operation mode
A spring holds the spool in position so that the oil flow is stopped in 3 and partially free from 2 and 4 to 1.
When the solenoid is energized, the spool is pushed to permit connection of 3 with 2 and 4 with 1.

GENERAL DATA
Weight without coil: 0,31 Kg (0,68 lbs).
Ambient temperature range: -30 °C a 60 °C with standard seals (NBR).
Max. proof pressure ports 2-3-4: 300 bar (4.350 psi).
Max. proof pressure port 1: 210 bar (3.045 psi).
Flow Max: 20 l/min (5,3 gpm).
Cartridge materials: high strength steel, internal parts hardened and grinding.

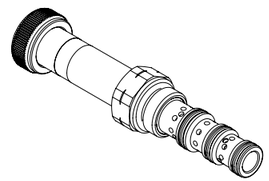

TECHNICAL DATA

HYDRAULIC

Max. working pressure:	210 bar (3.045 psi)
Flow rate:	See Performance graph
Fluid: *Viscosity:*	Mineral based oil From 15cSt to 250 cSt
Leakage:	160 cc/min P max. 210 bar (3.045 psi)
Standard seals:	O-ring NBR Seals Polyurethane
Cavity:	SCN1040
Installation torque:	35 Nm
Coil nut torque:	5 Nm
Max contamination level:	NAS 8 ISO 4406 19/17/14
Fluid temperature range:	From -20 °C to +80 °C
Seal kit std.:	5AG0044

ELECTRIC

Type of voltage:	DC
Insulation index:	H
Nominal voltage:	+/- 10 %
Power at 20 °C:	24 W
ED:*	100% with ambient temperature range -20 °C +40 °C
Coil code: *(see page 9.02.001)*	S190-24S

**Note:* For temperature or special conditions contact our sales department.

Drawing

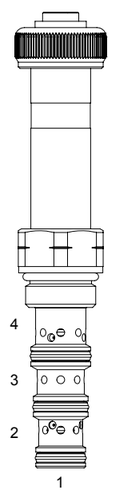

Hydraulic symbol

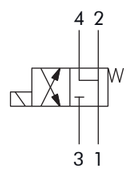

Pressure drop

Oil viscosity: 46 cSt (217 SSU) Fluid temperature: 40 °C

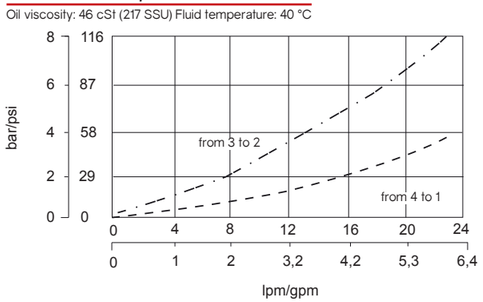

Performance graph

Oil viscosity: 46 cSt (217 SSU) Fluid temperature: 40 °C

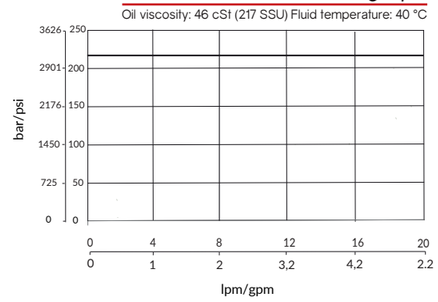

E10N-4B1

Inches
Millimeters

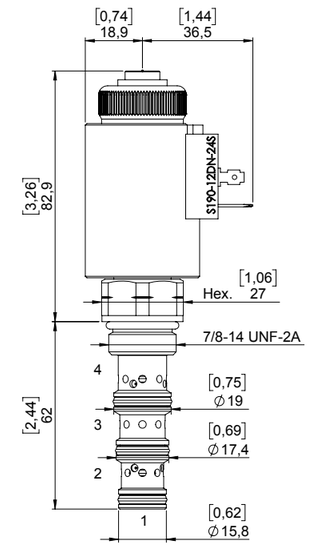

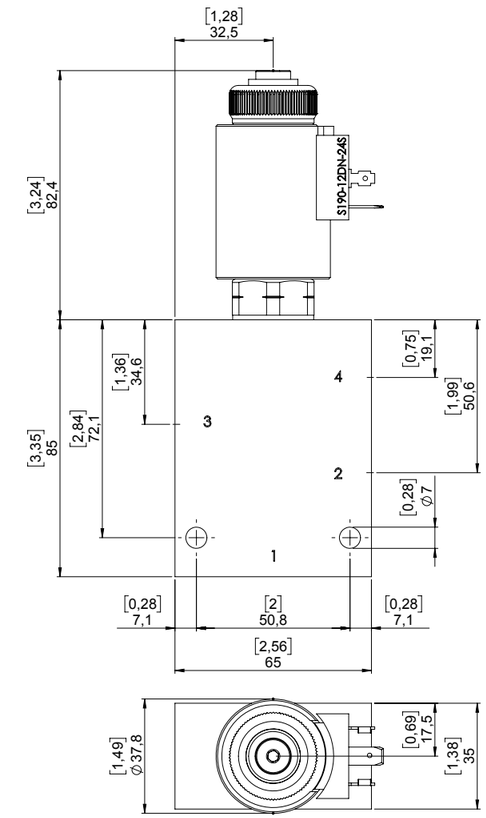

STANDARD HOUSING

Ordering code:	See page 9.03.005
Material:*	Aluminium/Steel Max working pressure for aluminum body: 210 bar Max working pressure for steel body: 350 bar

**Note:* To correctly select the material, in relation to application, see page S.003.

Ordering code

E10N-4B1 - -

Seals
- None (std. NBR)
- **Y**- Polyurethane
- For other options contact Sales dept.

*Options**
- None (std. without override)
- **P**- Push
- **PT**- Push and twist
- **SV**- Screw In

Connector
- **DN**- Din
- **DU**- Deutsch
- **AM**- Amp Junior

Voltage
- None (std. without coil)
- **12**- Vdc
- **24**- Vdc

Material std. housing
- **A**- Aluminium
- **S**- Steel

Housing size ports
- None (std. only cartridge)
- **3B**- 3/8" BSP
- **4B**- 1/2" BSP
- **3S**- SAE 8
- **4S**- SAE 10

**Note:* Information about manual override is available at page S.001

E10N-4C0

Solenoid valve 4 ways 2 positions, direct acting spool type

Description
Electric cartridge valve on/off, spool type, 4 ways, 2 positions.

Operation mode
A spring holds the spool in position so that the oil flow is allowed in all ports (1-2-3-4).
When the solenoid is energized, the spool is pushed to allow connection of 3 with 4 and 2 with 1.

GENERAL DATA
Weight without coil: 0,32 Kg (0,7 lbs).
Ambient temperature range: -30 °C a 60 °C with standard seals (NBR).
Max. proof pressure ports 1-2-3-4: 300 bar (4.350 psi).
Flow Max: 25 l/min (6,6 gpm).
Cartridge materials: high strength steel, internal parts hardened and grinding.

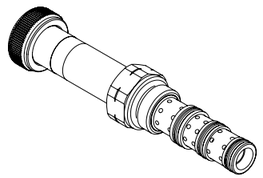

TECHNICAL DATA

HYDRAULIC	
Max. working pressure:	210 bar (3.045 psi)
Flow rate:	See Performance graph
Fluid: *Viscosity:*	Mineral based oil From 15cSt to 250 cSt
Leakage:	350 cc/min P max. 210 bar (3.045 psi)
Standard seals:	O-ring NBR Seals Polyurethane
Cavity:	SCN1040
Installation torque:	35 Nm
Coil nut torque:	2 Nm
Max contamination level:	NAS 8 ISO 4406 19/17/14
Fluid temperature range:	From -20 °C to +80 °C
Seal kit std.:	5AG0043
ELECTRIC	
Type of voltage:	DC
Insulation index:	H
Nominal voltage:	+/- 10 %
Power at 20 °C:	24 W
ED:*	100% with ambient temperature range -20 °C +40 °C
Coil code: *(see page 9.02.001)*	S190-24S

**Note:* For temperature or special conditions contact our sales department.

Drawing

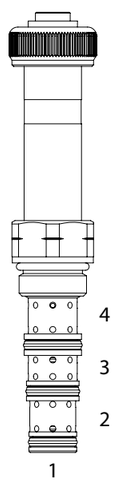

Hydraulic symbol

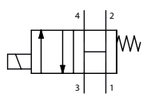

Pressure drop

Oil viscosity: 46 cSt (217 SSU) Fluid temperature: 40 °C

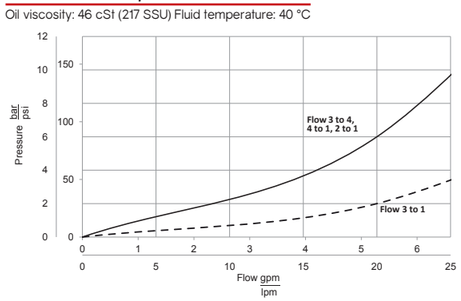

Performance graph

Oil viscosity: 46 cSt (217 SSU) Fluid temperature: 40 °C

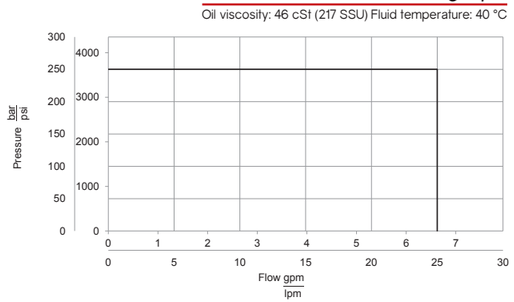

E10N-4C0

Inches
Millimeters

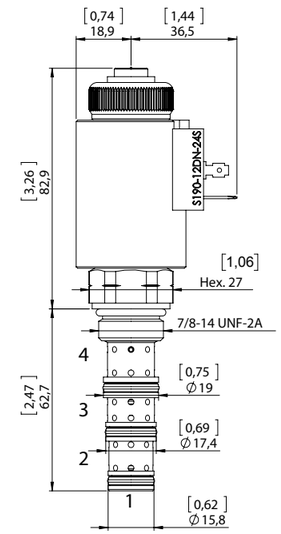

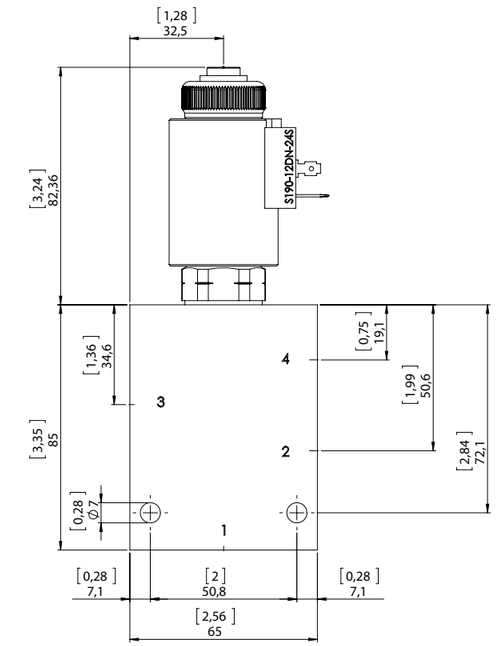

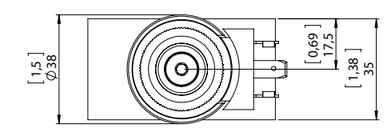

STANDARD HOUSING

Ordering code:	See page 9.03.005
Material:*	Aluminium/Steel Max working pressure for aluminum body: 210 bar Max working pressure for steel body: 350 bar

**Note:* To correctly select the material, in relation to application, see page S.003.

Ordering code

E10N-4C0 - - -

Seals
- None (std. NBR)
- **Y**- Polyurethane
- For other options contact Sales dept.

Options*
- None (std. without override)
- **P**- Push
- **PT**- Push and twist
- **SV**- Screw In

Connector
- **DN**- Din
- **DU**- Deutsch
- **AM**- Amp Junior

Voltage
- None (std. without coil)
- **12**- Vdc
- **24**- Vdc

Material std. housing
- **A**- Aluminium
- **S**- Steel

Housing size ports
- None (std. only cartridge)
- **3B**- 3/8" BSP
- **4B**- 1/2" BSP
- **3S**- SAE 8
- **4S**- SAE 10

**Note:* Information about manual override is available at page S.001

E10N-4C1

Solenoid valve 4 ways 2 positions, direct acting spool type

Description
Electric cartridge valve on/off, spool type, 4 ways, 2 positions.

Operation mode
A spring holds the spool in position so that the oil flow is allowed in all ports (1-2-3-4).
When the solenoid is energized, the spool is pulled to permit connection of 3 with 2 and 4 with 1.

GENERAL DATA
Weight without coil: 0,31 Kg (0,68 lbs).
Ambient temperature range: -30 °C a 60 °C with standard seals (NBR).
Max. proof pressure ports 1-2-3-4: 300 bar (4.350 psi).
Flow Max: 25 l/min (6,6 gpm).
Cartridge materials: high strength steel, internal parts hardened and grinding.

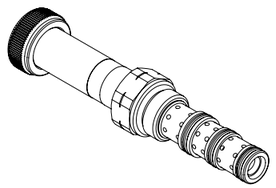

Drawing

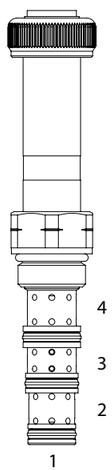

Hydraulic symbol

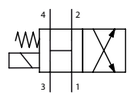

TECHNICAL DATA

HYDRAULIC

Max. working pressure:	210 bar (3.045 psi)
Flow rate:	See Performance graph
Fluid: *Viscosity:*	Mineral based oil From 15cSt to 250 cSt
Leakage:	350 cc/min P max. 210 bar (3.045 psi)
Standard seals:	O-ring NBR Seals Polyurethane
Cavity:	SCN1040
Installation torque:	35 Nm
Coil nut torque:	5 Nm
Max contamination level:	NAS 8 ISO 4406 19/17/14
Fluid temperature range:	From -20 °C to +80 °C
Seal kit std.:	5AG0044

ELECTRIC

Type of voltage:	DC
Insulation index:	H
Nominal voltage:	+/- 10 %
Power at 20 °C:	24 W
ED:*	100% with ambient temperature range -20 °C +40 °C
Coil code: *(see page 9.02.001)*	S190-24S

**Note:* For temperature or special conditions contact our sales department.

Pressure drop

Oil viscosity: 46 cSt (217 SSU) Fluid temperature: 40 °C

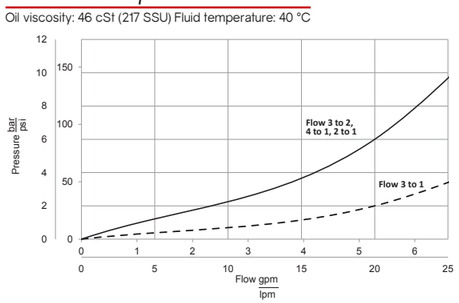

Performance graph

Oil viscosity: 46 cSt (217 SSU) Fluid temperature: 40 °C

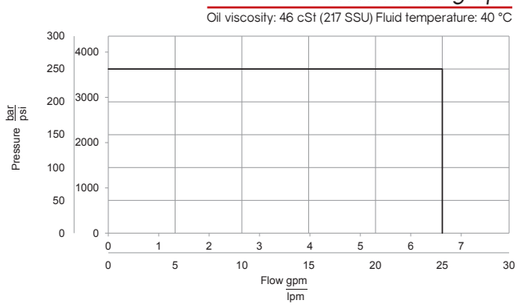

E10N-4C1

Inches
Millimeters

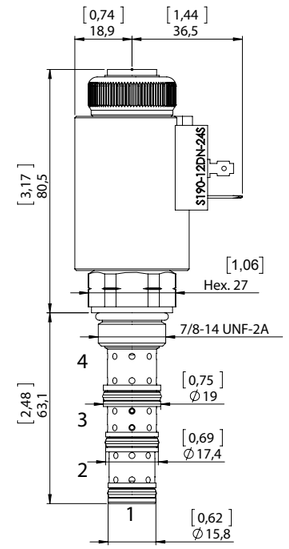

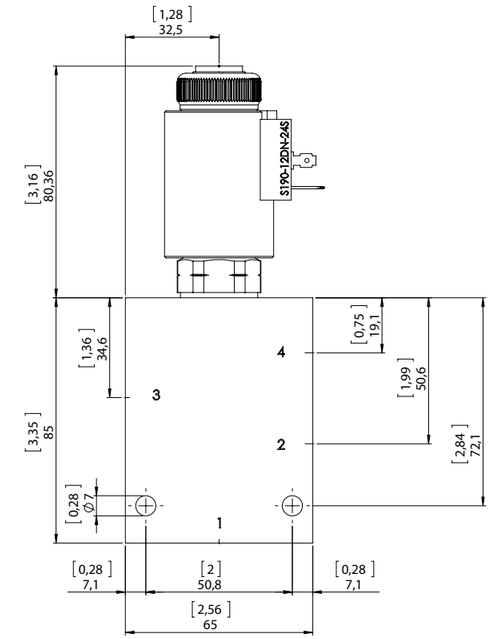

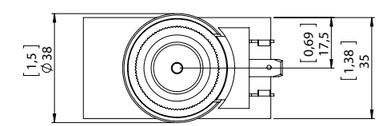

STANDARD HOUSING

Ordering code:	See page 9.03.005
Material:*	Aluminium/Steel Max working pressure for aluminum body: 210 bar Max working pressure for steel body: 350 bar

**Note:* To correctly select the material, in relation to application, see page S.003.

Ordering code

E10N-4C1 - -

Seals
- None (std. NBR)
- **Y**- Polyurethane
- For other options contact Sales dept.

*Options**
- None (std. without override)
- **S**- Screw out

Connector
- **DN**- Din
- **DU**- Deutsch
- **AM**- Amp Junior

Voltage
- None (std. without coil)
- **12**- Vdc
- **24**- Vdc

Material std. housing
- **A**- Aluminium
- **S**- Steel

Housing size ports
- None (std. only cartridge)
- **3B**- 3/8" BSP
- **4B**- 1/2" BSP
- **3S**- SAE 8
- **4S**- SAE 10

**Note:* Information about manual override is available at page S.001

E10N-4D0

Solenoid valve 4 ways 2 positions, direct acting spool type

Description
Electric cartridge valve on/off, spool type, 4 ways, 2 positions.

Operation mode
A spring holds the spool in position so that the oil flow is free from 3 to 1, while 2 and 4 are closed.
When the solenoid is energized, the spool is pulled to allow connection of 3 with 2 and 4 with 1.

GENERAL DATA
Weight without coil: 0,32 Kg (0,7 lbs).
Ambient temperature range: -30 °C a 60 °C with standard seals (NBR).
Max. proof pressure ports 1-2-3-4: 300 bar (4.350 psi).
Flow Max: 25 l/min (6,6 gpm).
Cartridge materials: high strength steel, internal parts hardened and grinding.

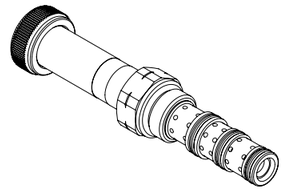

Drawing

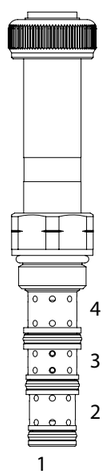

Hydraulic symbol

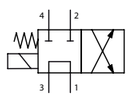

TECHNICAL DATA

HYDRAULIC

Max. working pressure:	210 bar (3.045 psi)
Flow rate:	See Performance graph
Fluid: *Viscosity:*	Mineral based oil From 15cSt to 250 cSt
Leakage:	350 cc/min P max. 210 bar (3.045 psi)
Standard seals:	O-ring NBR Seals Polyurethane
Cavity:	SCN1040
Installation torque:	35 Nm
Coil nut torque:	5 Nm
Max contamination level:	NAS 8 ISO 4406 19/17/14
Fluid temperature range:	From -20 °C to +80 °C
Seal kit std.:	5AG0044

ELECTRIC

Type of voltage:	DC
Insulation index:	H
Nominal voltage:	+/- 10 %
Power at 20 °C:	24 W
ED:*	100% with ambient temperature range -20 °C +40 °C
Coil code: *(see page 9.02.001)*	S190-24S

**Note:* For temperature or special conditions contact our sales department.

Pressure drop

Oil viscosity: 46 cSt (217 SSU) Fluid temperature: 40 °C

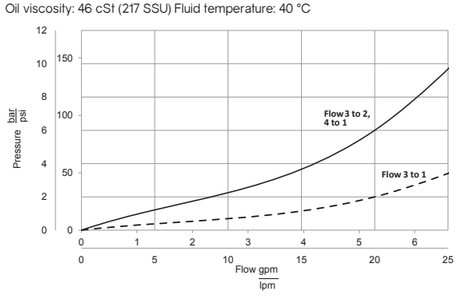

Performance graph

Oil viscosity: 46 cSt (217 SSU) Fluid temperature: 40 °C

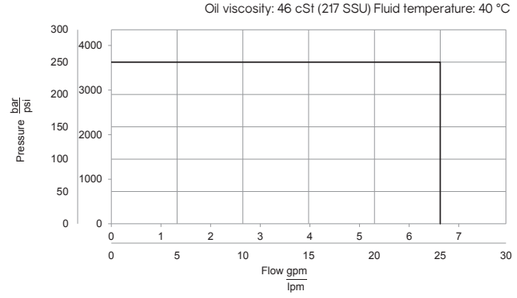

E10N-4D0

Inches
Millimeters

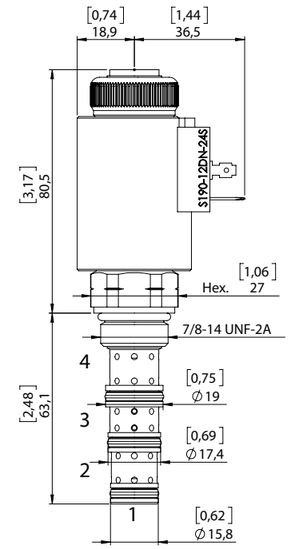

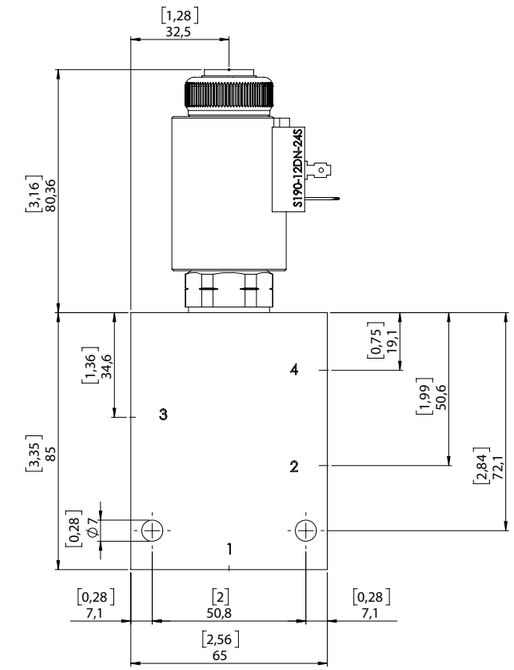

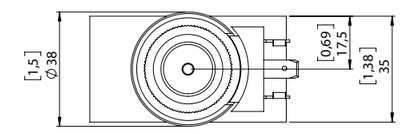

STANDARD HOUSING

Ordering code:	See page 9.03.005
Material:*	Aluminium/Steel Max working pressure for aluminum body: 210 bar Max working pressure for steel body: 350 bar

**Note:* To correctly select the material, in relation to application, see page S.003.

Ordering code

E10N-4D0 - -

Seals
- None (std. NBR)
- **Y**- Polyurethane
- For other options contact Sales dept.

*Options**
- None (std. without override)
- **S**- Screw out

Connector
- **DN**- Din
- **DU**- Deutsch
- **AM**- Amp Junior

Voltage
- None (std. without coil)
- **12**- Vdc
- **24**- Vdc

Material std. housing
- **A**- Aluminium
- **S**- Steel

Housing size ports
- None (std. only cartridge)
- **3B**- 3/8" BSP
- **4B**- 1/2" BSP
- **3S**- SAE 8
- **4S**- SAE 10

**Note:* Information about manual override is available at page S.001

E10N-4D1

Solenoid valve 4 ways 2 positions, direct acting spool type

Description
Electric cartridge valve on/off, spool type, 4 ways, 2 positions.

Operation mode
A spring holds the spool in position so that the oil flow is free from 3 to 1, while 2 and 4 are closed.
When the solenoid is energized, the spool is pushed to permit connection of 3 with 4 and 2 with 1.

GENERAL DATA
Weight without coil: 0,31 Kg (0,68 lbs).
Ambient temperature range: -30 °C a 60 °C with standard seals (NBR).
Max. proof pressure ports 1-2-3-4: 300 bar (4.350 psi).
Flow Max: 25 l/min (6,6 gpm).
Cartridge materials: high strength steel, internal parts hardened and grinding.

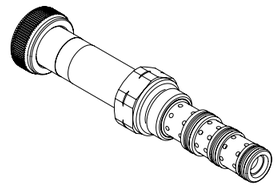

Drawing

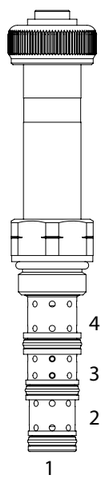

Hydraulic symbol

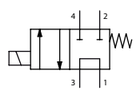

TECHNICAL DATA

HYDRAULIC

Max. working pressure:	210 bar (3.045 psi)
Flow rate:	See Performance graph
Fluid: *Viscosity:*	Mineral based oil From 15cSt to 250 cSt
Leakage:	350 cc/min P max. 210 bar (3.045 psi)
Standard seals:	O-ring NBR Seals Polyurethane
Cavity:	SCN1040
Installation torque:	35 Nm
Coil nut torque:	5 Nm
Max contamination level:	NAS 8 ISO 4406 19/17/14
Fluid temperature range:	From -20 °C to +80 °C
Seal kit std.:	5AG0044

ELECTRIC

Type of voltage:	DC
Insulation index:	H
Nominal voltage:	+/- 10 %
Power at 20 °C:	24 W
ED:*	100% with ambient temperature range -20 °C +40 °C
Coil code: *(see page 9.02.001)*	S190-24S

**Note:* For temperature or special conditions contact our sales department.

Pressure drop

Oil viscosity: 46 cSt (217 SSU) Fluid temperature: 40 °C

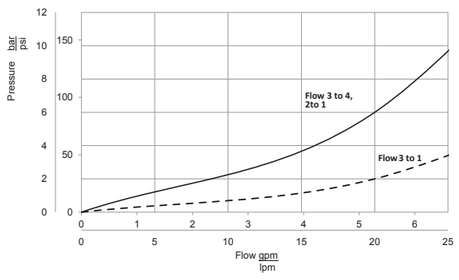

Performance graph

Oil viscosity: 46 cSt (217 SSU) Fluid temperature: 40 °C

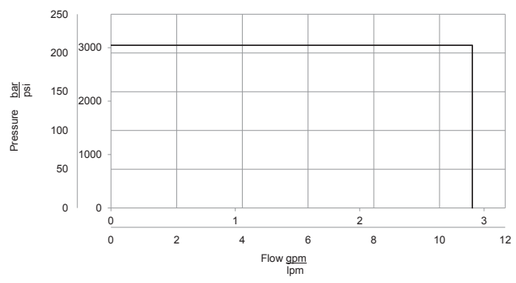

E10N-4D1

Inches
Millimeters

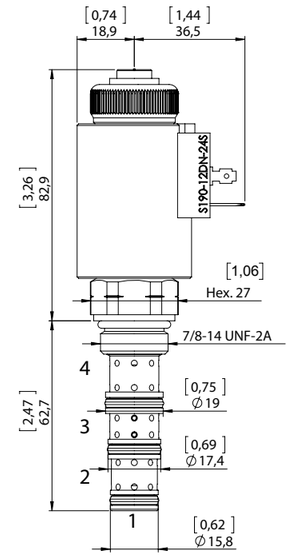

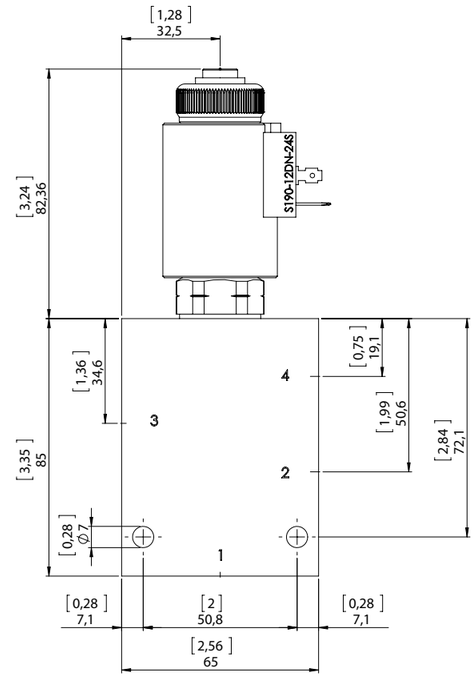

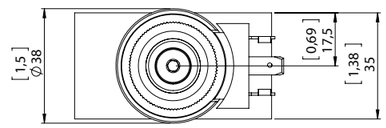

STANDARD HOUSING

Ordering code:	See page 9.03.005
Material:*	Aluminium/Steel Max working pressure for aluminum body: 210 bar Max working pressure for steel body: 350 bar

**Note:* To correctly select the material, in relation to application, see page S.003.

Ordering code

E10N-4D1 - -

Seals
- None (std. NBR)
- **Y**- Polyurethane
- For other options contact Sales dept.

*Options**
- None (std. without override)
- **P**- Push
- **PT**- Push and twist
- **SV**- Screw In

Connector
- **DN**- Din
- **DU**- Deutsch
- **AM**- Amp Junior

Voltage
- None (std. without coil)
- **12**- Vdc
- **24**- Vdc

Material std. housing
- **A**- Aluminium
- **S**- Steel

Housing size ports
- None (std. only cartridge)
- **3B**- 3/8" BSP
- **4B**- 1/2" BSP
- **3S**- SAE 8
- **4S**- SAE 10

**Note:* Information about manual override is available at page S.001

E10N-4E0

Solenoid valve 4 ways 2 positions, direct acting spool type

Description
Electric cartridge valve on/off, spool type, 4 ways, 2 positions.

Operation mode
A spring holds the spool in position so that the oil flow is free from 3 to 4, and 2 to 1.
When the solenoid is energized, the spool is pulled to allow connection of 3 with 1 while 2 and 4 are closed.

GENERAL DATA
Weight without coil: 0,32 Kg (0,7 lbs).
Ambient temperature range: -30 °c a 60 °C with standard seals (NBR).
Max. proof pressure ports 2-3-4: 300 bar (4.350 psi).
Max. proof pressure port 1: 210 bar (3.045 psi).
Flow Max: 20 l/min (5,3 gpm).
Cartridge materials: high strength steel, internal parts hardened and grinding.

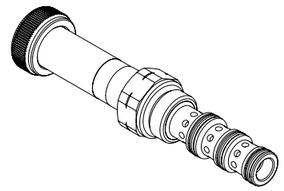

TECHNICAL DATA

HYDRAULIC	
Max. working pressure:	210 bar (3.045 psi)
Flow rate:	See Performance graph
Fluid: *Viscosity:*	Mineral based oil From 15cSt to 250 cSt
Leakage:	160 cc/min P max. 210 bar (3.045 psi)
Standard seals:	O-ring NBR Seals Polyurethane
Cavity:	SCN1040
Installation torque:	35 Nm
Coil nut torque:	5 Nm
Max contamination level:	NAS 8 ISO 4406 19/17/14
Fluid temperature range:	From -20 °C to +80 °C
Seal kit std.:	5AG0044
ELECTRIC	
Type of voltage:	DC
Insulation index:	H
Nominal voltage:	+/- 10 %
Power at 20 °C:	24 W
ED:*	100% with ambient temperature range -20 °C +40 °C
Coil code: *(see page 9.02.001)*	S190-24S

**Note:* For temperature or special conditions contact our sales department.

Drawing

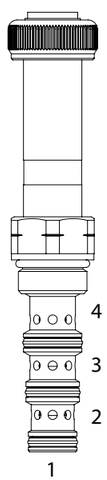

Hydraulic symbol

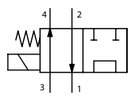

Pressure drop

Oil viscosity: 46 cSt (217 SSU) Fluid temperature: 40 °C

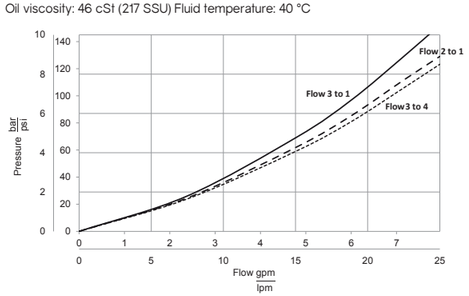

Performance graph

Oil viscosity: 46 cSt (217 SSU) Fluid temperature: 40 °C

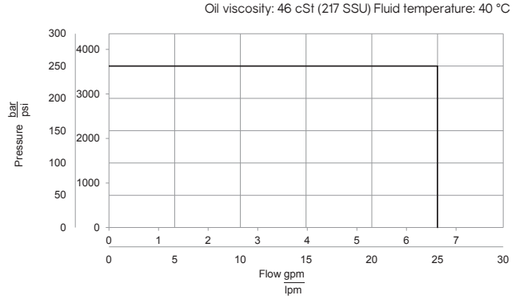

E10N-4E0

Inches
Millimeters

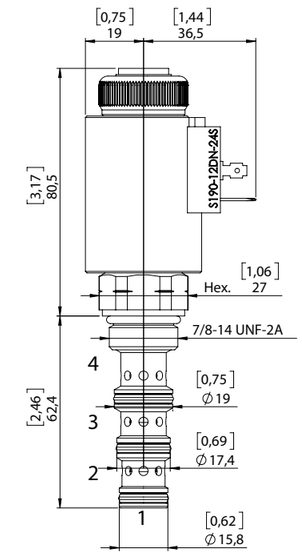

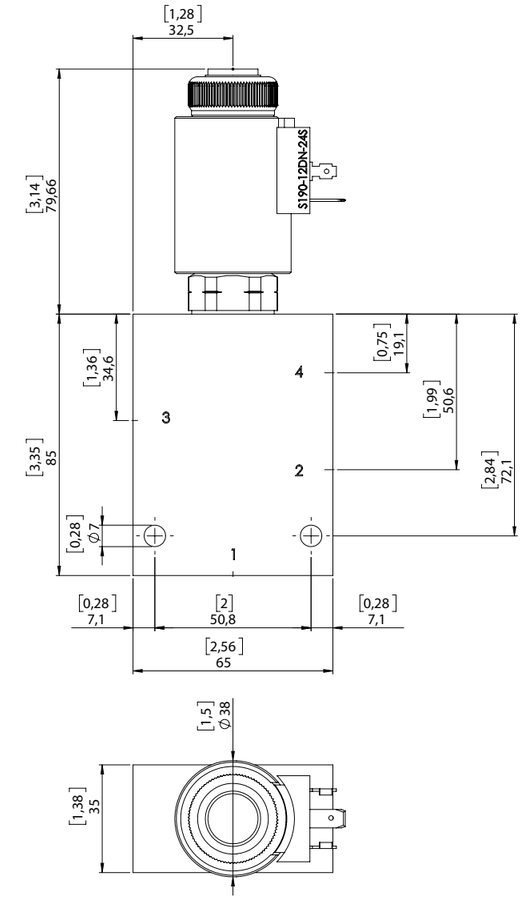

STANDARD HOUSING

Ordering code:	See page 9.03.005
Material:*	Aluminium/Steel Max working pressure for aluminum body: 210 bar Max working pressure for steel body: 350 bar

**Note:* To correctly select the material, in relation to application, see page S.003.

Ordering code

E10N-4E0 - - -

Seals
- None (std. NBR)
- **Y**- Polyurethane
- For other options contact Sales dept.

*Options**
- None (std. without override)
- **S**- Screw out

Connector
- **DN**- Din
- **DU**- Deutsch
- **AM**- Amp Junior

Voltage
- None (std. without coil)
- **12**- Vdc
- **24**- Vdc

Material std. housing
- **A**- Aluminium
- **S**- Steel

Housing size ports
- None (std. only cartridge)
- **3B**- 3/8" BSP
- **4B**- 1/2" BSP
- **3S**- SAE 8
- **4S**- SAE 10

**Note:* Information about manual override is available at page S.001

E10N-4G0

Solenoid valve 4 ways 2 positions, direct acting spool type

Description
Electric cartridge valve on/off, spool type, 4 ways, 2 positions.

Operation mode
A spring holds the spool in position so that the oil flow is free from 4 to 1, while 2 and 3 are closed.
When the solenoid is energized, the spool is pulled to permit connection of 3 with 4 and 2 with 1.

GENERAL DATA
Weight without coil: 0,31 Kg (0,68 lbs).
Ambient temperature range: -30 °c a 60 °C with standard seals (NBR).
Max. proof pressure ports 2-3-4: 300 bar (4.350 psi).
Max. proof pressure port 1: 210 bar (3.045 psi).
Flow Max: 25 l/min (6,6 gpm).
Cartridge materials: high strength steel, internal parts hardened and grinding.

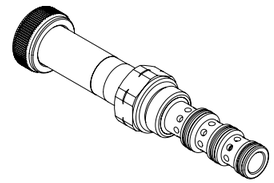

Drawing

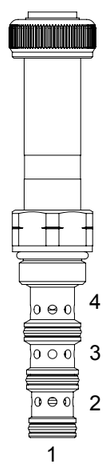

Hydraulic symbol

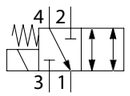

TECHNICAL DATA

HYDRAULIC

Max. working pressure:	210 bar (3.045 psi)
Flow rate:	See Performance graph
Fluid: *Viscosity:*	Mineral based oil From 15cSt to 250 cSt
Leakage:	160 cc/min P max. 210 bar (3.045 psi)
Standard seals:	O-ring NBR Seals Polyurethane
Cavity:	SCN1040
Installation torque:	35 Nm
Coil nut torque:	5 Nm
Max contamination level:	NAS 8 ISO 4406 19/17/14
Fluid temperature range:	From -20 °C to +80 °C
Seal kit std.:	5AG0044

ELECTRIC

Type of voltage:	DC
Insulation index:	H
Nominal voltage:	+/- 10 %
Power at 20 °C:	24 W
ED:*	100% with ambient temperature range -20 °C +40 °C
Coil code: *(see page 9.02.001)*	S190-24S

**Note:* For temperature or special conditions contact our sales department.

Pressure drop
Oil viscosity: 46 cSt (217 SSU) Fluid temperature: 40 °C

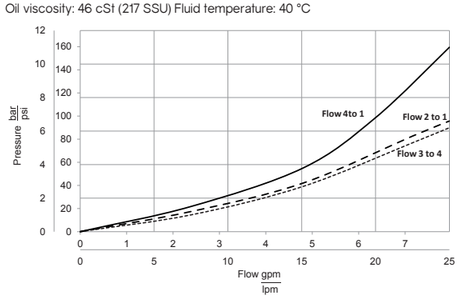

Performance graph
Oil viscosity: 46 cSt (217 SSU) Fluid temperature: 40 °C

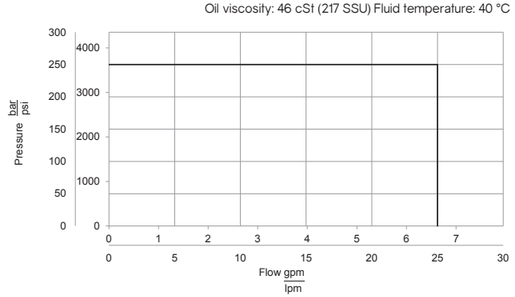

E10N-4G0

Inches
Millimeters

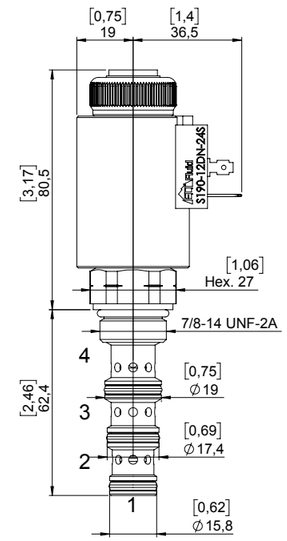

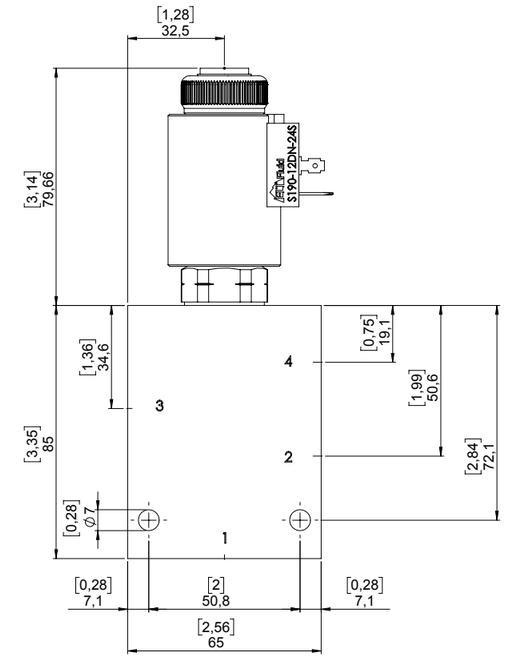

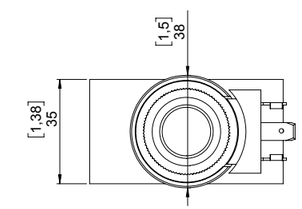

STANDARD HOUSING

Ordering code:	See page 9.03.005
Material:*	Aluminium/Steel Max working pressure for aluminum body: 210 bar Max working pressure for steel body: 350 bar

**Note:* To correctly select the material, in relation to application, see page S.003.

Ordering code

E10N-4G0 - - -

Seals
- None (std. NBR)
- **Y**- Polyurethane
- For other options contact Sales dept.

*Options**
- None (std. without override)
- **S**- Screw out

Connector
- **DN**- Din
- **DU**- Deutsch
- **AM**- Amp Junior

Voltage
- None (std. without coil)
- **12**- Vdc
- **24**- Vdc

Material std. housing
- **A**- Aluminium
- **S**- Steel

Housing size ports
- None (std. only cartridge)
- **3B**- 3/8" BSP
- **4B**- 1/2" BSP
- **3S**- SAE 8
- **4S**- SAE 10

**Note:* Information about manual override is available at page S.001

E10N-4R0

Solenoid valve 4 ways 2 positions, direct acting spool type

Description

Electric cartridge valve on/off, spool type, 4 ways, 2 positions, direct acting spool.

Operation mode

A spring holds the spool in position so that the oil flow is allowed in ports 4
with 3 and 2 with 1.
When the solenoid is energized, the spool is shifted (pulled) and all 4 ports are closed.

GENERAL DATA

Weight without coil: 0,32 Kg (0,7 lbs).
Ambient temperature range: -30 °C a 60 °C with standard seals (NBR).
Max. proof pressure: 300 bar (4.350 psi).
Flow Max: 20 l/min (5,3 gpm).
Cartridge materials: high strength steel, internal parts hardened and grinding.

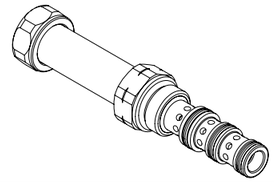

Drawing

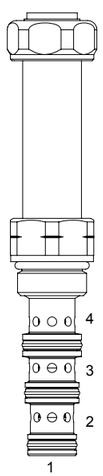

Hydraulic symbol

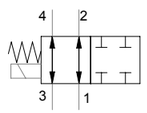

TECHNICAL DATA

HYDRAULIC

Max. working pressure:	210 bar (3.045 psi)
Flow rate:	See Performance graph
Fluid: *Viscosity:*	Mineral based oil From 15cSt to 250 cSt
Leakage:	160 cc/min P max. 210 bar (3.045 psi)
Standard seals:	O-ring NBR Seals Polyurethane
Cavity:	SCN1040
Installation torque:	35 Nm
Coil nut torque:	5 Nm
Max contamination level:	NAS 8 ISO 4406 19/17/14
Fluid temperature range:	From -20 °C to +80 °C
Seal kit std.:	5AG0044

ELECTRIC

Type of voltage:	DC
Insulation index:	H
Nominal voltage:	+/- 10 %
Power at 20 °C:	24 W
ED:*	100% with ambient temperature range -20 °C +40 °C
Coil code: *(see page 9.02.001)*	S190-24S

Note: For temperature or special conditions contact our sales department.

Pressure drop

Oil viscosity: 46 cSt (217 SSU) Fluid temperature: 40 °C

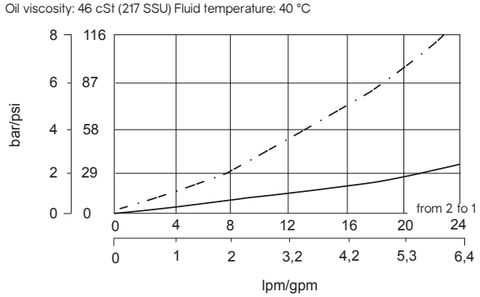

Performance graph

Oil viscosity: 46 cSt (217 SSU) Fluid temperature: 40 °C

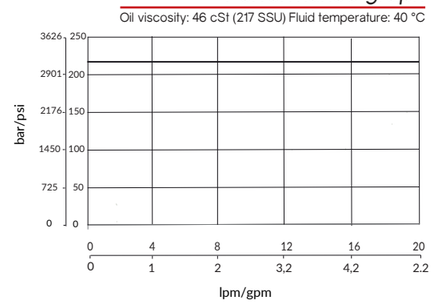

E10N-4R0

Inches
Millimeters

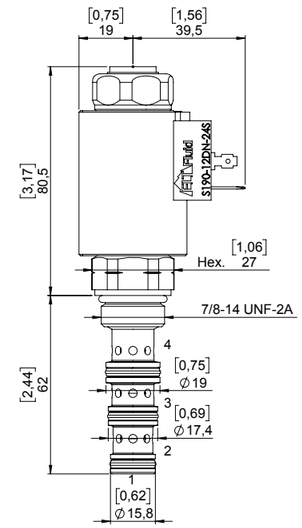

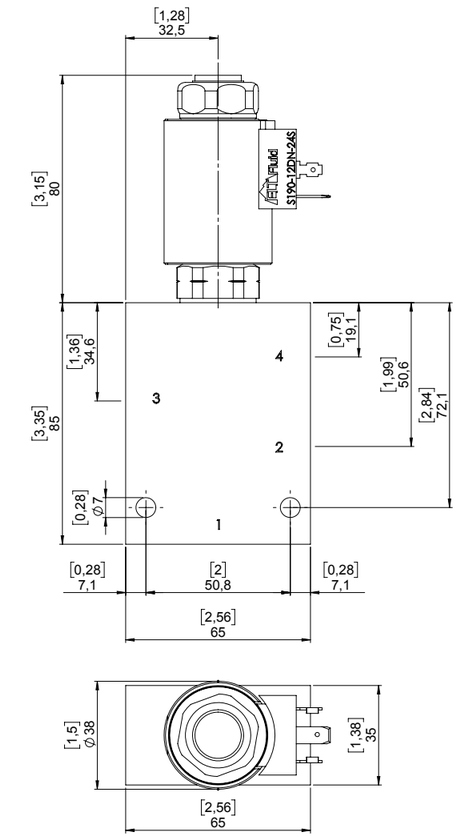

STANDARD HOUSING

Ordering code:	See page 9.03.005
Material:*	Aluminium/Steel Max working pressure for aluminum body: 210 bar Max working pressure for steel body: 350 bar

Note: To correctly select the material, in relation to application, see page S.003.

Ordering code

E10N-4R0 - -

Seals
- None (std. NBR)
- **Y**- Polyurethane
- For other options contact Sales dept.

*Options**
- None (std. without override)
- **S**- Screw out

Connector
- **DN**- Din
- **DU**- Deutsch
- **AM**- Amp Junior

Voltage
- None (std. without coil)
- **12**- Vdc
- **24**- Vdc

Material std. housing
- **A**- Aluminium
- **S**- Steel

Housing size ports
- None (std. only cartridge)
- **3B**- 3/8" BSP
- **4B**- 1/2" BSP
- **3S**- SAE 8
- **4S**- SAE 10

Note: Information about manual override is available at page S.001

E10N-4X0

Solenoid valve 4 ways 2 positions, direct acting spool type

Description

Electric cartridge valve on/off, spool type, 4 ways, 2 positions.

Operation mode

A spring holds the spool in position so that the oil flow is allowed in ports 4 with 1 and 3 with 2.
When the solenoid is energized, the spool is pulled to allow connection of 3 with 4 and 2 with 1.

GENERAL DATA

Weight without coil: 0,32 Kg (0,7 lbs).
Ambient temperature range: -30 °C a 60 °C with standard seals (NBR).
Max. proof pressure: 300 bar (4.350 psi).
Flow Max: 20 l/min (5,3 gpm).
Cartridge materials: high strength steel, internal parts hardened and grinding.

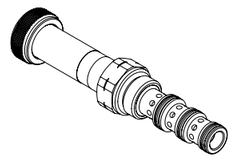

Drawing

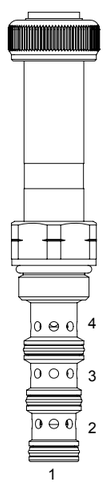

Hydraulic symbol

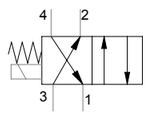

TECHNICAL DATA

HYDRAULIC

Max. working pressure:	210 bar (3.045 psi)
Flow rate:	See Performance graph
Fluid: *Viscosity:*	Mineral based oil From 15cSt to 250 cSt
Leakage:	160 cc/min P max. 210 bar (3.045 psi)
Standard seals:	O-ring NBR Seals Polyurethane
Cavity:	SCN1040
Installation torque:	35 Nm
Coil nut torque:	5 Nm
Max contamination level:	NAS 8 ISO 4406 19/17/14
Fluid temperature range:	From -20 °C to +80 °C
Seal kit std.:	5AG0044

ELECTRIC

Type of voltage:	DC
Insulation index:	H
Nominal voltage:	+/- 10 %
Power at 20 °C:	24 W
ED:*	100% with ambient temperature range -20 °C +40 °C
Coil code: *(see page 9.02.001)*	S190-24S

**Note:* For temperature or special conditions contact our sales department.

Pressure drop

Oil viscosity: 46 cSt (217 SSU) Fluid temperature: 40 °C

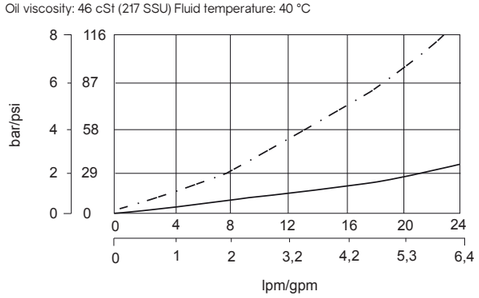

Performance graph

Oil viscosity: 46 cSt (217 SSU) Fluid temperature: 40 °C

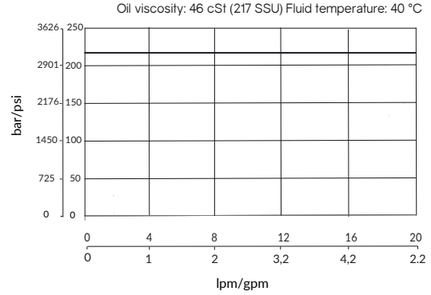

E10N-4X0

Inches
Millimeters

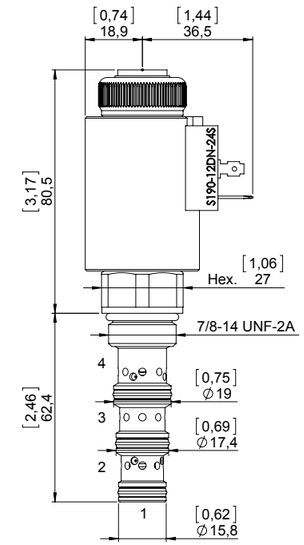

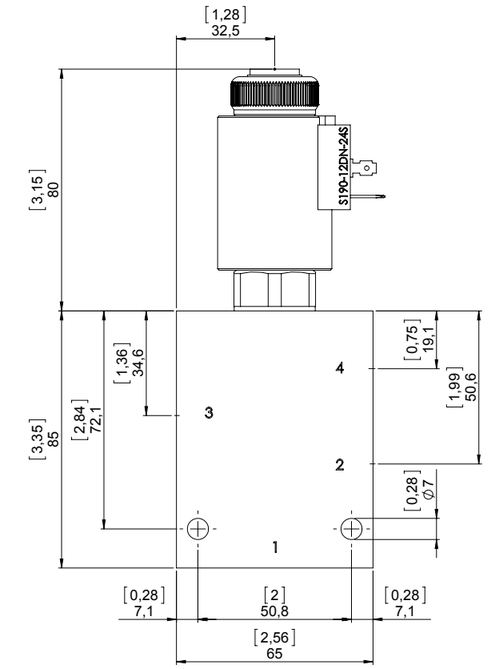

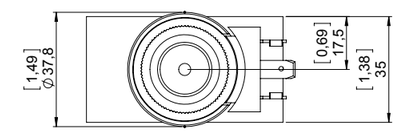

STANDARD HOUSING

Ordering code:	See page 9.03.005
Material:*	Aluminium/Steel Max working pressure for aluminum body: 210 bar Max working pressure for steel body: 350 bar

**Note:* To correctly select the material, in relation to application, see page S.003.

Ordering code

E10N-4X0 - -

Seals
- None (std. NBR)
- **Y**- Polyurethane
- For other options contact Sales dept.

*Options**
- None (std. without override)
- **S**- Screw out

Connector
- **DN**- Din
- **DU**- Deutsch
- **AM**- Amp Junior

Voltage
- None (std. without coil)
- **12**- Vdc
- **24**- Vdc

Material std. housing
- **A**- Aluminium
- **S**- Steel

Housing size ports
- None (std. only cartridge)
- **3B**- 3/8" BSP
- **4B**- 1/2" BSP
- **3S**- SAE 8
- **4S**- SAE 10

**Note:* Information about manual override is available at page S.001

E10N-4X1

Solenoid valve 4 ways 2 positions, direct acting spool type

Description
Electric cartridge valve on/off, spool type, 4 ways, 2 positions.

Operation mode
A spring holds the spool in position so that the oil flow is allowed in ports 3 with 4 and 2 with 1.
When the solenoid is energized, the spool is pushed to permit connection of 4 with 1 and 3 with 2.

GENERAL DATA
Weight without coil: 0,31 Kg (0,68 lbs).
Ambient temperature range: -30 °C a 60 °C with standard seals (NBR).
Max. proof pressure: 300 bar (4.350 psi).
Flow Max: 20 l/min (5,3 gpm).
Cartridge materials: high strength steel, internal parts hardened and grinding.

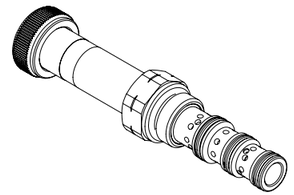

Drawing

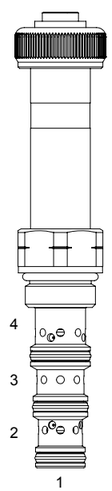

Hydraulic symbol

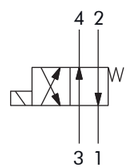

TECHNICAL DATA

HYDRAULIC

Max. working pressure:	210 bar (3.045 psi)
Flow rate:	See Performance graph
Fluid: *Viscosity:*	Mineral based oil From 15cSt to 250 cSt
Leakage:	160 cc/min P max. 210 bar (3.045 psi)
Standard seals:	O-ring NBR Seals Polyurethane
Cavity:	SCN1040
Installation torque:	35 Nm
Coil nut torque:	5 Nm
Max contamination level:	NAS 8 ISO 4406 19/17/14
Fluid temperature range:	From -20 °C to +80 °C
Seal kit std.:	5AG0044

ELECTRIC

Type of voltage:	DC
Insulation index:	H
Nominal voltage:	+/- 10 %
Power at 20 °C:	24 W
ED:*	100% with ambient temperature range -20 °C +40 °C
Coil code: *(see page 9.02.001)*	S190-24S

**Note:* For temperature or special conditions contact our sales department.

Pressure drop

Oil viscosity: 46 cSt (217 SSU) Fluid temperature: 40 °C

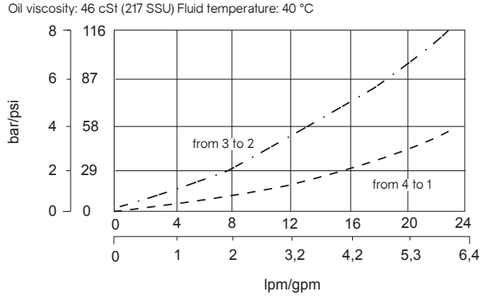

Performance graph

Oil viscosity: 46 cSt (217 SSU) Fluid temperature: 40 °C

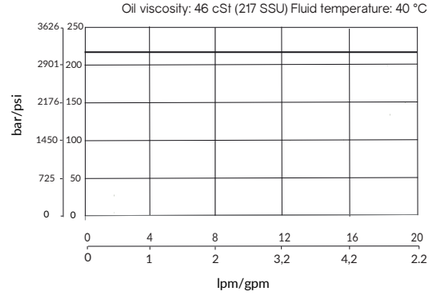

E10N-4X1

Inches
Millimeters

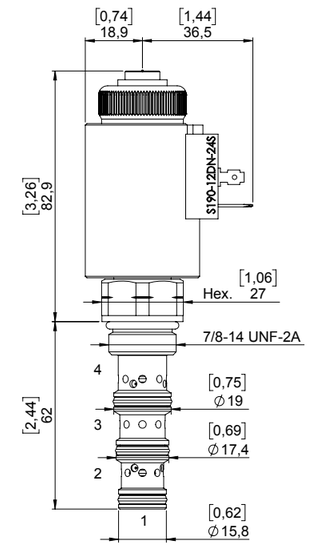

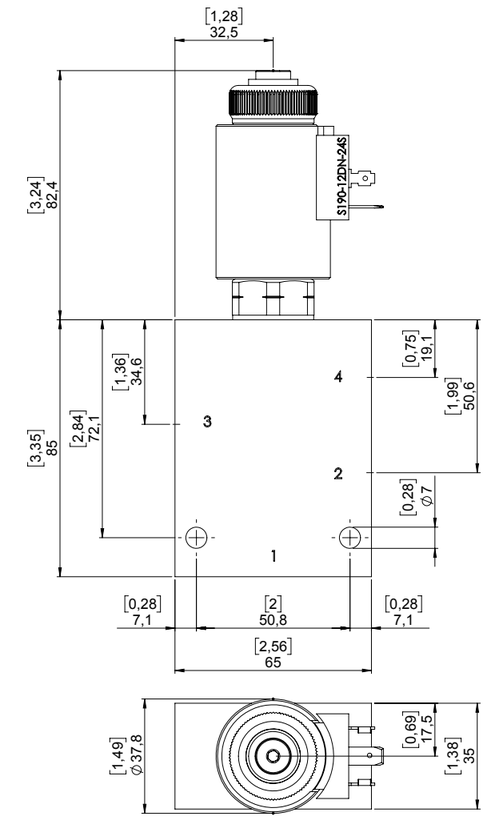

STANDARD HOUSING

Ordering code:	See page 9.03.005
Material:*	Aluminium/Steel Max working pressure for aluminum body: 210 bar Max working pressure for steel body: 350 bar

**Note:* To correctly select the material, in relation to application, see page S.003.

Ordering code

E10N-4X1 - -

Seals
- None (std. NBR)
- **Y**- Polyurethane
- For other options contact Sales dept.

*Options**
- None (std. without override)
- **P**- Push
- **PT**- Push and twist
- **SV**- Screw In

Connector
- **DN**- Din
- **DU**- Deutsch
- **AM**- Amp Junior

Voltage
- None (std. without coil)
- **12**- Vdc
- **24**- Vdc

Material std. housing
- **A**- Aluminium
- **S**- Steel

Housing size ports
- None (std. only cartridge)
- **3B**- 3/8" BSP
- **4B**- 1/2" BSP
- **3S**- SAE 8
- **4S**- SAE 10

**Note:* Information about manual override is available at page S.001

E08N-4A

Solenoid valve 4 ways 3 positions, direct acting spool type

Description

Electric cartridge valve on/off, spool type, 4 ways, 3 positions.

Operation mode

A spring holds the spool in position so that the oil flow is stopped in all ports (1-2-3-4).
When the S1 solenoid is energized, the spool is pulled to allow connection of 3 with 4 and 2 with 1.
When the S2 solenoid is energized, the spool is pushed to permit connection of 3 with 2 and 4 with 1.

GENERAL DATA

Weight without coil: 0,19 Kg (0,42 lbs).
Ambient temperature range: -30 °C a 60 °C with standard seals (NBR).
Max. proof pressure ports 2-3-4: 300 bar (4.350 psi).
Max. proof pressure port 1: 50 bar (725 psi).
Flow Max: 12 l/min (3,2 gpm).
Cartridge materials: high strength steel, internal parts hardened and grinding.

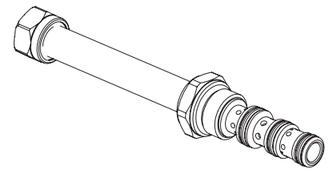

Drawing

Hydraulic symbol

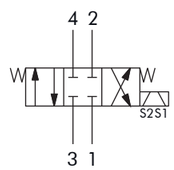

TECHNICAL DATA

HYDRAULIC	
Max. working pressure:	210 bar (3.045 psi)
Flow rate:	12 l/min (3,2 gpm)
Fluid: *Viscosity:*	Mineral based oil From 15cSt to 250 cSt
Leakage:	160 cc/min P max. 210 bar (3.045 psi)
Standard seals:	O-ring NBR Seals Polyurethane
Cavity:	SCN0840
Installation torque:	27 Nm
Coil nut torque:	2 Nm
Max contamination level:	NAS 8 ISO 4406 19/17/14
Fluid temperature range:	From -20 °C to +80 °C
Seal kit std.:	5AG0043
ELECTRIC	
Type of voltage:	DC
Insulation index:	H
Nominal voltage:	+/- 10 %
Power at 20 °C:	20,5 W
ED:*	100% with ambient temperature range -20 °C +40 °C
Coil code: *(see page 9.01.002)*	S130-20S

**Note:* For temperature or special conditions contact our sales department.

Pressure drop

Oil viscosity: 46 cSt (217 SSU) Fluid temperature: 40 °C

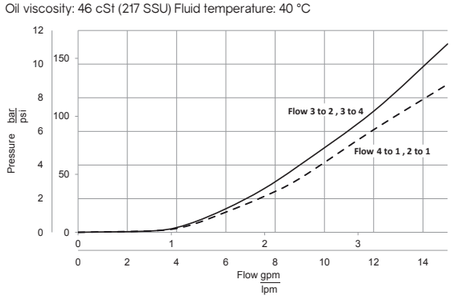

Performance graph

Oil viscosity: 46 cSt (217 SSU) Fluid temperature: 40 °C

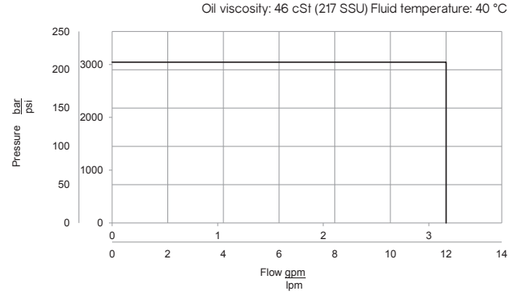

E08N-4A

Inches
Millimeters

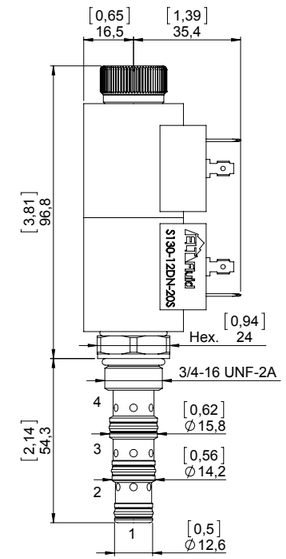

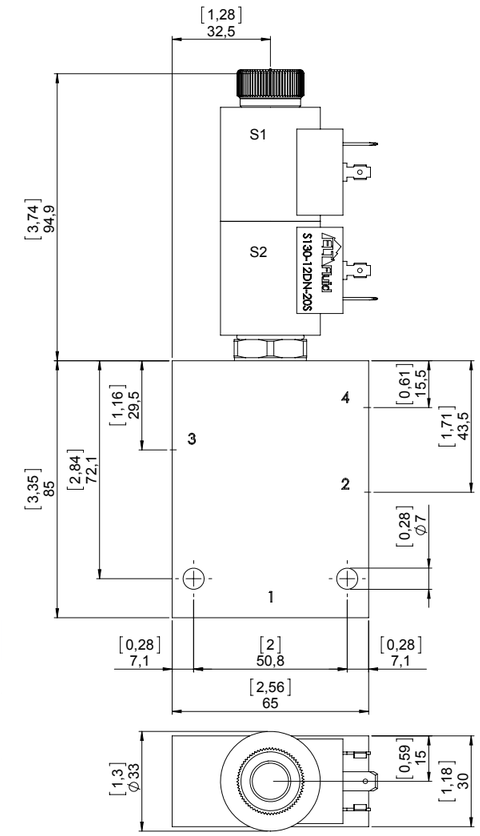

STANDARD HOUSING

Ordering code:	See page 9.02.005
Material:*	Aluminium/Steel Max working pressure for aluminum body: 210 bar Max working pressure for steel body: 350 bar

**Note:* To correctly select the material, in relation to application, see page S.003.

Ordering code

E08N-4A - -

Seals
- None (std. NBR+Polyurethane)
- **Y**- Polyurethane
- For other options contact Sales dept.

*Options**
- None (std. without override)
- **PP**- Push&Pull
- **L**- Lever

Connector
- **DN**- Din
- **DU**- Deutsch
- **AM**- Amp Junior

Voltage
- None (std. without coil)
- **12**- Vdc
- **24**- Vdc

Material std. housing
- **A**- Aluminium
- **S**- Steel

Housing size ports
- None (std. only cartridge)
- **2B**- 1/4" BSP
- **3B**- 3/8" BSP
- **2S**- SAE 6
- **3S**- SAE 8

**Note:* Information about manual override is available at page S.001

E08N-4B

Solenoid valve 4 ways 3 positions, direct acting spool type

Description

Electric cartridge valve on/off, spool type, 4 ways, 3 positions.

Operation mode

A spring holds the spool in position so that the oil flow is stopped in 3 and partially free from 2 and 4 to 1.
When the S1 solenoid is energized, the spool is pulled to allow connection of 3 with 4 and 2 with 1.
When the S2 solenoid is energized, the spool is pushed to permit connection of 3 with 2 and 4 with 1.

GENERAL DATA

Weight without coil: 0,19 Kg (0,42 lbs).
Ambient temperature range: -30 °C a 60 °C with standard seals (NBR).
Max. proof pressure ports 2-3-4: 300 bar (4.350 psi).
Max. proof pressure port 1: 50 bar (725 psi).
Flow Max: 12 l/min (3,2 gpm).
Cartridge materials: high strength steel, internal parts hardened and grinding.

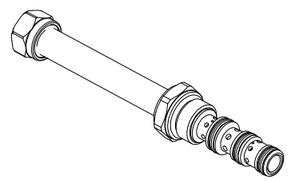

Drawing

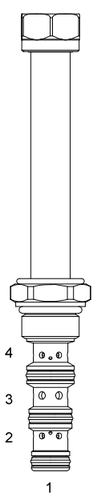

Hydraulic symbol

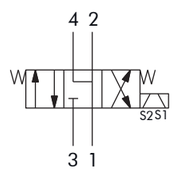

TECHNICAL DATA

HYDRAULIC

Max. working pressure:	210 bar (3.045 psi)
Flow rate:	12 l/min (3,2 gpm)
Fluid: *Viscosity:*	Mineral based oil From 15cSt to 250 cSt
Leakage:	160 cc/min P max. 210 bar (3.045 psi)
Standard seals:	O-ring NBR Seals Polyurethane
Cavity:	SCN0840
Installation torque:	27 Nm
Coil nut torque:	2 Nm
Max contamination level:	NAS 8 ISO 4406 19/17/14
Fluid temperature range:	From -20 °C to +80 °C
Seal kit std.:	5AG0043

ELECTRIC

Type of voltage:	DC
Insulation index:	H
Nominal voltage:	+/- 10 %
Power at 20 °C:	20,5 W
ED:*	100% with ambient temperature range -20 °C +40 °C
Coil code: *(see page 9.01.002)*	S130-20S

**Note:* For temperature or special conditions contact our sales department.

Pressure drop

Oil viscosity: 46 cSt (217 SSU) Fluid temperature: 40 °C

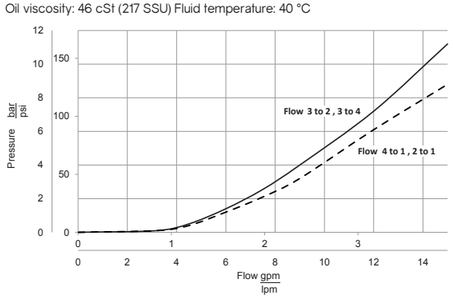

Performance graph

Oil viscosity: 46 cSt (217 SSU) Fluid temperature: 40 °C

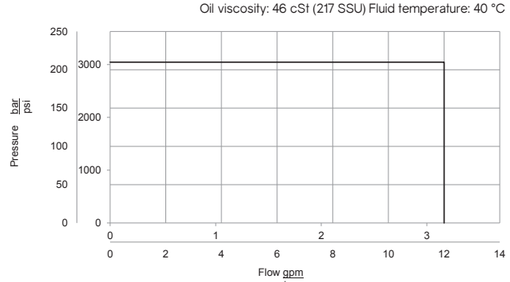

E08N-4B

Inches
Millimeters

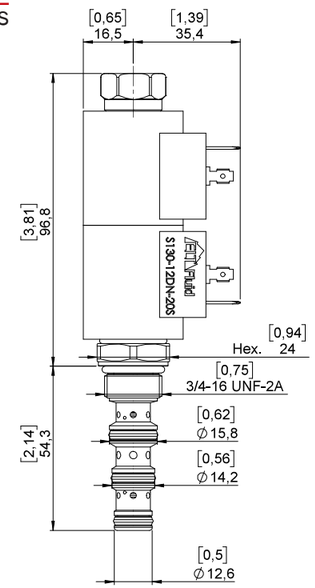

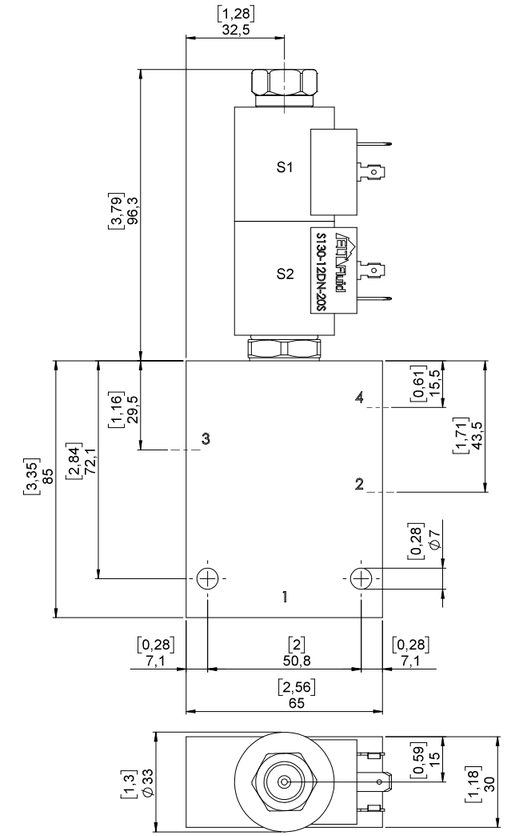

STANDARD HOUSING

Ordering code:	See page 9.02.005
Material:*	Aluminium/Steel Max working pressure for aluminum body: 210 bar Max working pressure for steel body: 350 bar

**Note:* To correctly select the material, in relation to application, see page S.003.

Ordering code

E08N-4B - -

Seals
- None (std. NBR+Polyurethane)
- **Y**- Polyurethane
- For other options contact Sales dept.

*Options**
- None (std. without override)
- **PP**- Push&Pull
- **L**- Lever

Connector
- **DN**- Din
- **DU**- Deutsch
- **AM**- Amp Junior

Voltage
- None (std. without coil)
- **12**- Vdc
- **24**- Vdc

Material std. housing
- **A**- Aluminium
- **S**- Steel

Housing size ports
- None (std. only cartridge)
- **2B**- 1/4" BSP
- **3B**- 3/8" BSP
- **2S**- SAE 6
- **3S**- SAE 8

**Note:* Information about manual override is available at page S.001

E08N-4C

Solenoid valve 4 ways 3 positions, direct acting spool type

Description

Electric cartridge valve on/off, spool type, 4 ways, 3 positions.

Operation mode

A spring holds the spool in position so that the oil flow is allowed in all ports (1-2-3-4).
When the S1 solenoid is energized, the spool is pulled to allow connection of 4 with 1 and 3 with 2.
When the S2 solenoid is energized, the spool is pushed to permit connection of 3 with 4 and 2 with 1.

GENERAL DATA

Weight without coil: 0,19 Kg (0,42 lbs).
Ambient temperature range: -30 °C a 60 °C with standard seals (NBR).
Max. proof pressure ports 2-3-4: 300 bar (4.350 psi).
Max. proof pressure port 1: 50 bar (725 psi).
Flow Max: 11 l/min (2,9 gpm).
Cartridge materials: high strength steel, internal parts hardened and grinding.

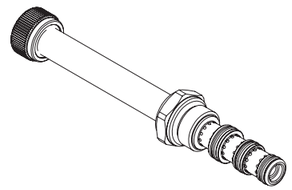

Drawing

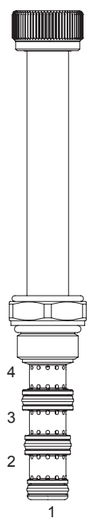

Hydraulic symbol

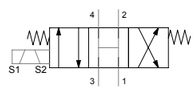

TECHNICAL DATA

HYDRAULIC	
Max. working pressure:	210 bar (3.045 psi)
Flow rate:	11 l/min (2,9 gpm)
Fluid: *Viscosity:*	Mineral based oil From 15cSt to 250 cSt
Leakage:	350 cc/min P max. 210 bar (3.045 psi)
Standard seals:	O-ring NBR Seals Polyurethane
Cavity:	SCN0840
Installation torque:	27 Nm
Coil nut torque:	2 Nm
Max contamination level:	NAS 8 ISO 4406 19/17/14
Fluid temperature range:	From -20 °C to +80 °C
Seal kit std.:	5AG0043
ELECTRIC	
Type of voltage:	DC
Insulation index:	H
Nominal voltage:	+/- 10 %
Power at 20 °C:	20,5 W
ED:*	100% with ambient temperature range -20 °C +40 °C
Coil code: *(see page 9.01.002)*	S130-20S

**Note:* For temperature or special conditions contact our sales department.

Pressure drop

Oil viscosity: 46 cSt (217 SSU) Fluid temperature: 40 °C

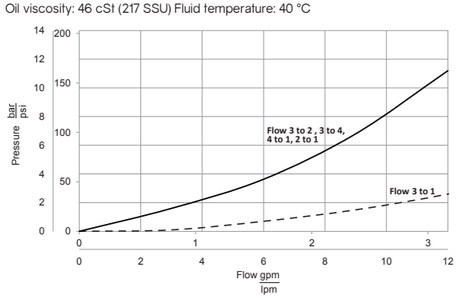

Performance graph

Oil viscosity: 46 cSt (217 SSU) Fluid temperature: 40 °C

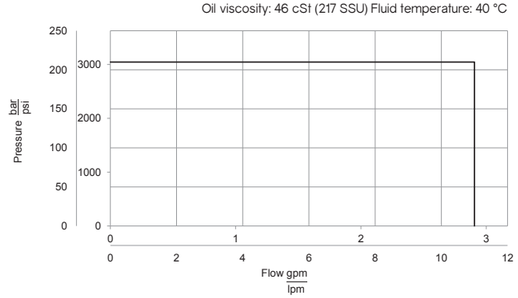

E08N-4C

Inches
Millimeters

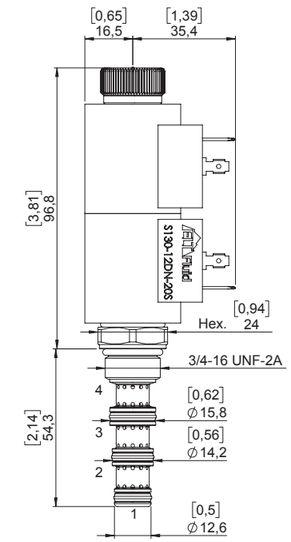

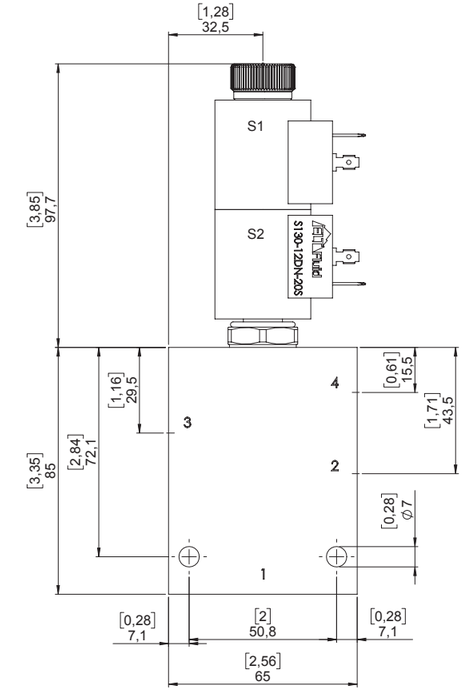

STANDARD HOUSING

Ordering code:	See page 9.02.005
Material:*	Aluminium/Steel Max working pressure for aluminum body: 210 bar Max working pressure for steel body: 350 bar

**Note:* To correctly select the material, in relation to application, see page S.003.

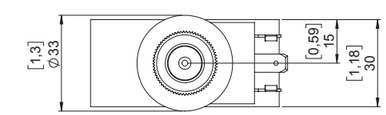

Ordering code

E08N-4C - -

Seals
- None (std. NBR+Polyurethane)
- **Y**- Polyurethane
- For other options contact Sales dept.

*Options**
- None (std. without override)
- **PP**- Push&Pull
- **L**- Lever

Connector
- **DN**- Din
- **DU**- Deutsch
- **AM**- Amp Junior

Voltage
- None (std. without coil)
- **12**- Vdc
- **24**- Vdc

Material std. housing
- **A**- Aluminium
- **S**- Steel

Housing size ports
- None (std. only cartridge)
- **2B**- 1/4" BSP
- **3B**- 3/8" BSP
- **2S**- SAE 6
- **3S**- SAE 8

**Note:* Information about manual override is available at page S.001

E08N-4D

Solenoid valve 4 ways 3 positions, direct acting spool type

Description

Electric cartridge valve on/off, spool type, 4 ways, 3 positions.

Operation mode

A spring holds the spool in position so that the oil flow is free from 3 to 1, while 2 and 4 are closed.
When the S1 solenoid is energized, the spool is pulled to allow connection of 3 with 2 and 4 with 1.
When the S2 solenoid is energized, the spool is pushed to permit connection of 3 with 4 and 2 with 1.

GENERAL DATA

Weight without coil: 0,19 Kg (0,42 lbs).
Ambient temperature range: -30 °C a 60 °C with standard seals (NBR).
Max. proof pressure ports 2-3-4: 300 bar (4.350 psi).
Max. proof pressure port 1: 210 bar (3.045 psi).
Flow Max: 11 l/min (2,9 gpm).
Cartridge materials: high strength steel, internal parts hardened and grinding.

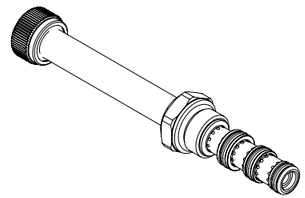

Drawing

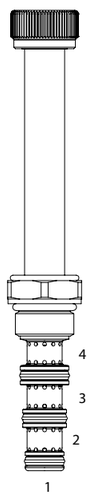

Hydraulic symbol

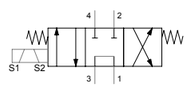

TECHNICAL DATA

HYDRAULIC	
Max. working pressure:	210 bar (3.045 psi)
Flow rate:	11 l/min (2,9 gpm)
Fluid: *Viscosity:*	Mineral based oil From 15cSt to 250 cSt
Leakage:	350 cc/min P max. 210 bar (3.045 psi)
Standard seals:	O-ring NBR Seals Polyurethane
Cavity:	SCN0840
Installation torque:	27 Nm
Coil nut torque:	2 Nm
Max contamination level:	NAS 8 ISO 4406 19/17/14
Fluid temperature range:	From -20 °C to +80 °C
Seal kit std.:	5AG0043
ELECTRIC	
Type of voltage:	DC
Insulation index:	H
Nominal voltage:	+/- 10 %
Power at 20 °C:	20,5 W
ED:*	100% with ambient temperature range -20 °C +40 °C
Coil code: *(see page 9.01.002)*	S130-20S

**Note:* For temperature or special conditions contact our sales department.

Pressure drop

Oil viscosity: 46 cSt (217 SSU) Fluid temperature: 40 °C

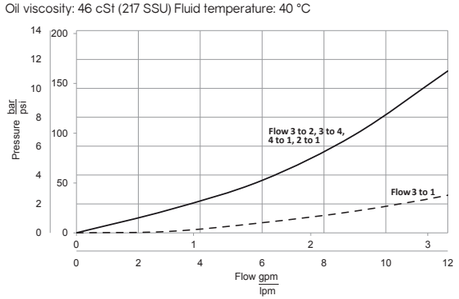

Performance graph

Oil viscosity: 46 cSt (217 SSU) Fluid temperature: 40 °C

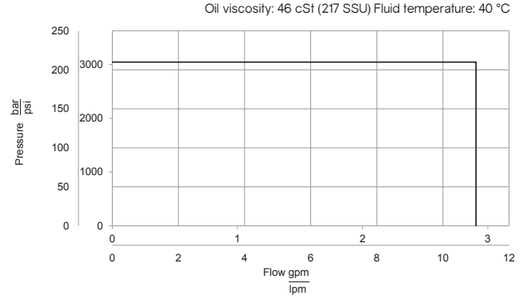

E08N-4D

Inches
Millimeters

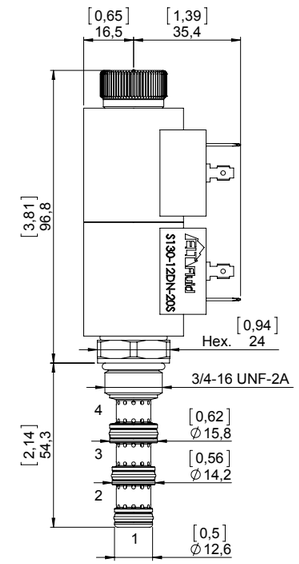

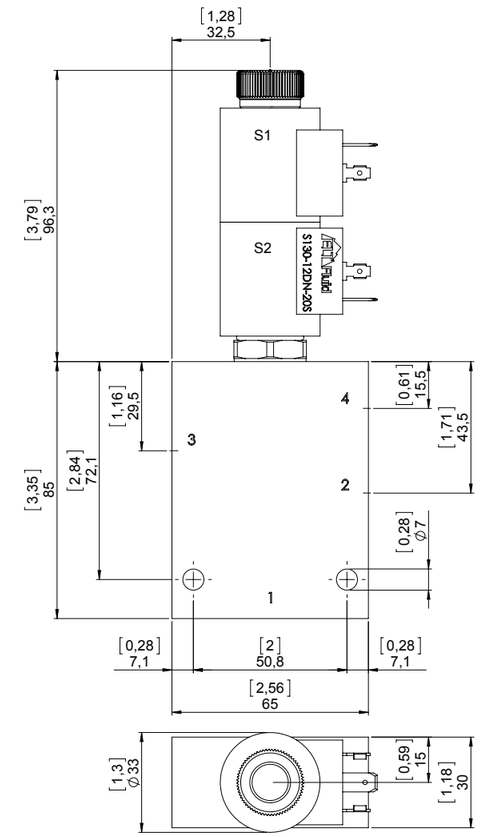

STANDARD HOUSING

Ordering code:	See page 9.02.005
Material:*	Aluminium/Steel Max working pressure for aluminum body: 210 bar Max working pressure for steel body: 350 bar

**Note:* To correctly select the material, in relation to application, see page S.003.

Ordering code

E08N-4D - -

Seals
- None (std. NBR+Polyurethane)
- **Y**- Polyurethane
- For other options contact Sales dept.

*Options**
- None (std. without override)
- **PP**- Push&Pull
- **L**- Lever

Connector
- **DN**- Din
- **DU**- Deutsch
- **AM**- Amp Junior

Voltage
- None (std. without coil)
- **12**- Vdc
- **24**- Vdc

Material std. housing
- **A**- Aluminium
- **S**- Steel

Housing size ports
- None (std. only cartridge)
- **2B**- 1/4" BSP
- **3B**- 3/8" BSP
- **2S**- SAE 6
- **3S**- SAE 8

**Note:* Information about manual override is available at page S.001

E08N-4N

Solenoid valve 4 ways 3 positions, direct acting spool type

Description

Electric cartridge valve on/off, spool type, 4 ways, 3 positions.

Operation mode

A spring holds the spool in position so that the oil flow is stopped in ports 3-4 and partially free from 2 to 1.
When the S1 solenoid is energized, the spool is pulled to allow connection of 3 with 4 and 2 with 1.
When the S2 solenoid is energized, the spool is pushed to permit connection of 3 with 2 and 4 with 1.

GENERAL DATA

Weight without coil: 0,19 Kg (0,42 lbs).
Ambient temperature range: -30 °C a 60 °C with standard seals (NBR).
Max. proof pressure ports 2-3-4: 300 bar (4.350 psi).
Max. proof pressure port 1: 50 bar (725 psi).
Flow Max: 12 l/min (3,2 gpm).
Cartridge materials: high strength steel, internal parts hardened and grinding.

Drawing

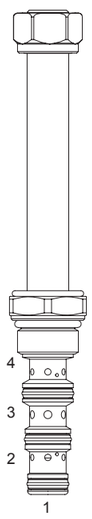

Hydraulic symbol

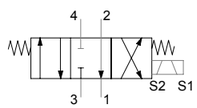

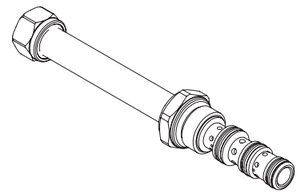

TECHNICAL DATA

HYDRAULIC	
Max. working pressure:	210 bar (3.045 psi)
Flow rate:	12 l/min (3,2 gpm)
Fluid: *Viscosity:*	Mineral based oil From 15cSt to 250 cSt
Leakage:	160 cc/min P max. 210 bar (3.045 psi)
Standard seals:	O-ring NBR Seals Polyurethane
Cavity:	SCN0840
Installation torque:	27 Nm
Coil nut torque:	2 Nm
Max contamination level:	NAS 8 ISO 4406 19/17/14
Fluid temperature range:	From -20 °C to +80 °C
Seal kit std.:	5AG0043
ELECTRIC	
Type of voltage:	DC
Insulation index:	H
Nominal voltage:	+/- 10 %
Power at 20 °C:	20,5 W
ED:*	100% with ambient temperature range -20 °C +40 °C
Coil code: *(see page 9.01.002)*	S130-20S

**Note:* For temperature or special conditions contact our sales department.

Pressure drop

Oil viscosity: 46 cSt (217 SSU) Fluid temperature: 40 °C

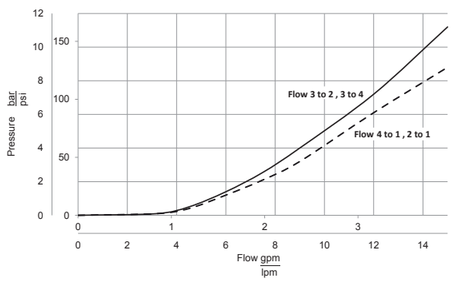

E08N-4N

Inches
Millimeters

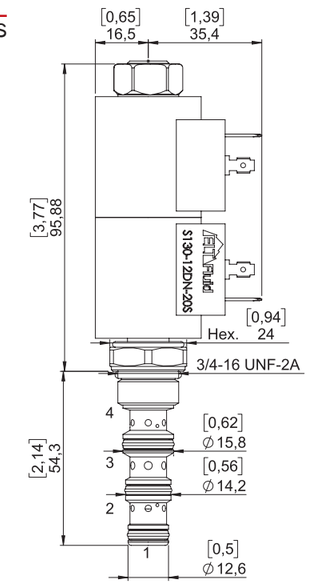

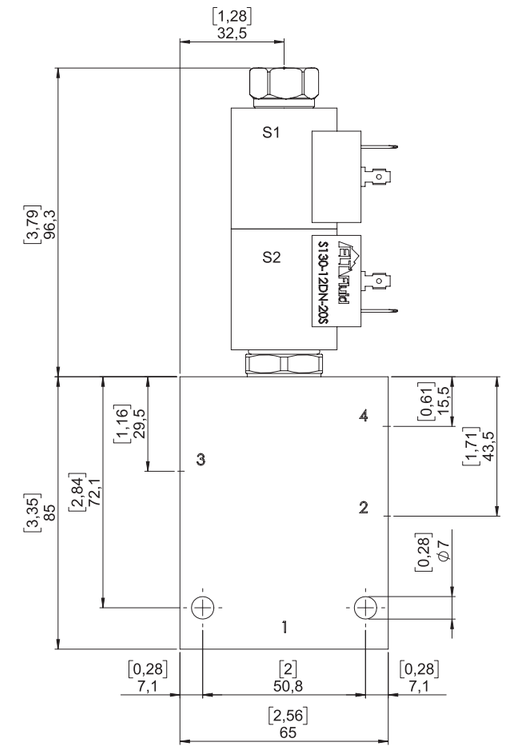

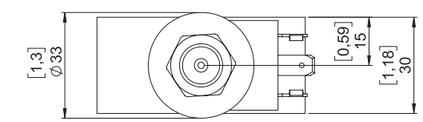

STANDARD HOUSING

Ordering code:	See page 9.02.005
Material:*	Aluminium/Steel Max working pressure for aluminum body: 210 bar Max working pressure for steel body: 350 bar

**Note:* To correctly select the material, in relation to application, see page S.003.

Ordering code

E08N-4N - -

Seals
- None (std. NBR+Polyurethane)
- **Y**- Polyurethane
- For other options contact Sales dept.

*Options**
- None (std. without override)
- **PP**- Push&Pull
- **L**- Lever

Connector
- **DN**- Din
- **DU**- Deutsch
- **AM**- Amp Junior

Voltage
- None (std. without coil)
- **12**- Vdc
- **24**- Vdc

Material std. housing
- **A**- Aluminium
- **S**- Steel

Housing size ports
- None (std. only cartridge)
- **2B**- 1/4" BSP
- **3B**- 3/8" BSP
- **2S**- SAE 6
- **3S**- SAE 8

**Note:* Information about manual override is available at page S.001

E10N-4A

Solenoid valve 4 ways 3 positions, direct acting spool type

Description

Electric cartridge valve on/off, spool type, 4 ways, 3 positions.

Operation mode

A spring holds the spool in position so that the oil flow is stopped in all ports (1-2-3-4).
When the S1 solenoid is energized, the spool is pulled to allow connection of 3 with 4 and 2 with 1.
When the S2 solenoid is energized, the spool is pushed to permit connection of 3 with 2 and 4 with 1.

GENERAL DATA

Weight without coil: 0,35 Kg (0,77 lbs).
Ambient temperature range: -30 °C a 60 °C with standard seals (NBR).
Max. proof pressure ports 2-3-4: 300 bar (4.350 psi).
Max. proof pressure port 1: 50 bar (725 psi).
Flow Max: 20 l/min (5,3 gpm).
Cartridge materials: high strength steel, internal parts hardened and grinding.

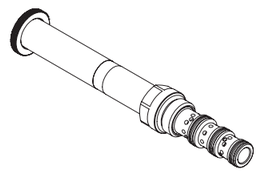

Drawing

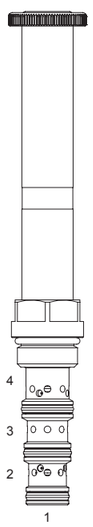

Hydraulic symbol

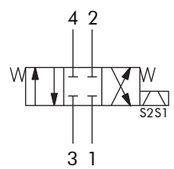

TECHNICAL DATA

HYDRAULIC

Max. working pressure:	250 bar (3.625 psi)
Flow rate:	See performance graph
Fluid: *Viscosity:*	Mineral based oil From 15cSt to 250 cSt
Leakage:	160 cc/min P max. 210 bar (3.045 psi)
Standard seals:	O-ring NBR Seals Polyurethane
Cavity:	SCN1040
Installation torque:	35 Nm
Coil nut torque:	2 Nm
Max contamination level:	NAS 8 ISO 4406 19/17/14
Fluid temperature range:	From -20 °C to +80 °C
Seal kit std.:	5AG0044

ELECTRIC

Type of voltage:	DC
Insulation index:	H
Nominal voltage:	+/- 10 %
Power at 20 °C:	24 W
ED:*	100% with ambient temperature range -20 °C +40 °C
Coil code: *(see page 9.02.001)*	S190-24S

**Note:* For temperature or special conditions contact our sales department.

Pressure drop

Oil viscosity: 46 cSt (217 SSU) Fluid temperature: 40 °C

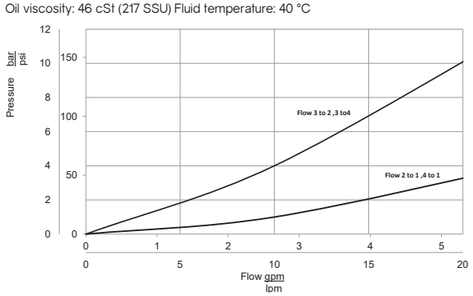

Performance graph

Oil viscosity: 46 cSt (217 SSU) Fluid temperature: 40 °C

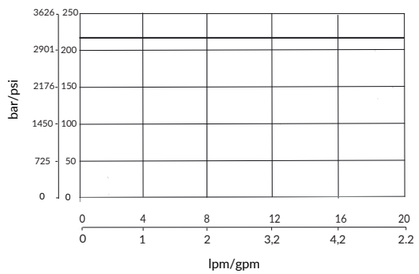

E10N-4A

Inches
Millimeters

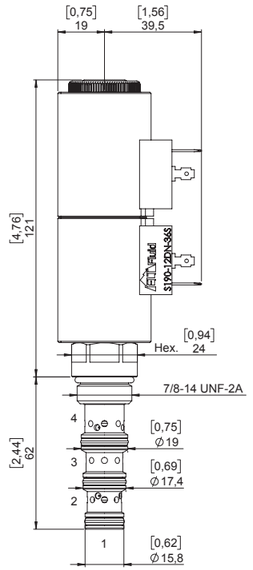

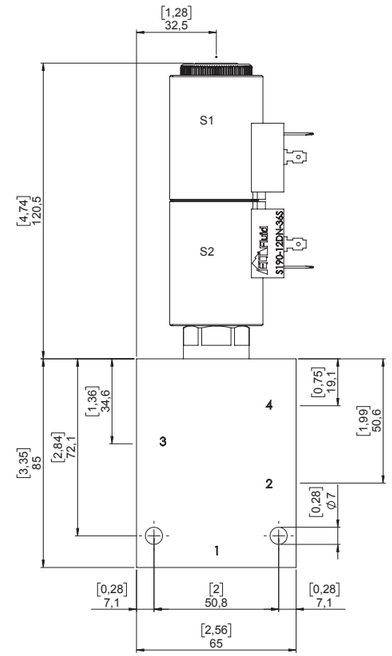

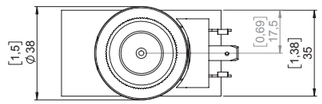

STANDARD HOUSING

Ordering code:	See page 9.03.005
Material:*	Aluminium/Steel Max working pressure for aluminum body: 210 bar Max working pressure for steel body: 350 bar

**Note:* To correctly select the material, in relation to application, see page S.003.

Ordering code

E10N-4A - -

Seals
- None (std. NBR+Polyurethane)
- **Y**- Polyurethane
- For other options contact Sales dept.

*Options**
- None (std. without override)
- **P**- Push
- **L**- Lever

Connector
- **DN**- Din
- **DU**- Deutsch
- **AM**- Amp Junior

Voltage
- None (std. without coil)
- **12**- Vdc
- **24**- Vdc

Material std. housing
- **A**- Aluminium
- **S**- Steel

Housing size ports
- None (std. only cartridge)
- **3B**- 3/8" BSP
- **4B**- 1/2" BSP
- **3S**- SAE 8
- **4S**- SAE 10

**Note:* Information about manual override is available at page S.001

E10N-4B

Solenoid valve 4 ways 3 positions, direct acting spool type

Description
Electric cartridge valve on/off, spool type, 4 ways, 3 positions.

Operation mode
A spring holds the spool in position so that the oil flow is stopped in 3 and partially free from 2 and 4 to 1.
When the S1 solenoid is energized, the spool is shifted pulled to allow connection of 3 with 4 and 2 with 1.
When the S2 solenoid is energized, the spool is pushed to permit connection of 3 with 2 and 4 with 1.

GENERAL DATA
Weight without coil: 0,35 Kg (0,77 lbs).
Ambient temperature range: -30 °c a 60 °C with standard seals (NBR).
Max. proof pressure ports 2-3-4: 300 bar (4.350 psi).
Max. proof pressure port 1: 50 bar (725 psi).
Flow Max: 20 l/min (5,2 gpm).
Cartridge materials: high strength steel, internal parts hardened and grinding.

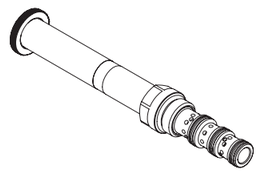

Drawing

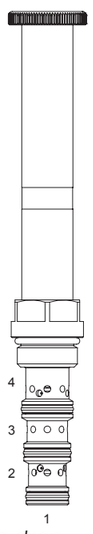

Hydraulic symbol

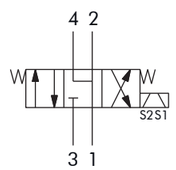

TECHNICAL DATA

HYDRAULIC

Max. working pressure:	250 bar (3.625 psi)
Flow rate:	See performance graph
Fluid: *Viscosity:*	Mineral based oil From 15cSt to 250 cSt
Leakage:	160 cc/min P max. 210 bar (3.045 psi)
Standard seals:	O-ring NBR Seals Polyurethane
Cavity:	SCN1040
Installation torque:	35 Nm
Coil nut torque:	2 Nm
Max contamination level:	NAS 8 ISO 4406 19/17/14
Fluid temperature range:	From -20 °C to +80 °C
Seal kit std.:	5AG0044

ELECTRIC

Type of voltage:	DC
Insulation index:	H
Nominal voltage:	+/- 10 %
Power at 20 °C:	24 W
ED:*	100% with ambient temperature range -20 °C +40 °C
Coil code: *(see page 9.02.001)*	S190-24S

**Note:* For temperature or special conditions contact our sales department.

Pressure drop

Oil viscosity: 46 cSt (217 SSU) Fluid temperature: 40 °C

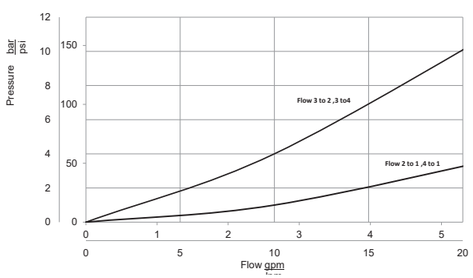

Performance graph

Oil viscosity: 46 cSt (217 SSU) Fluid temperature: 40 °C

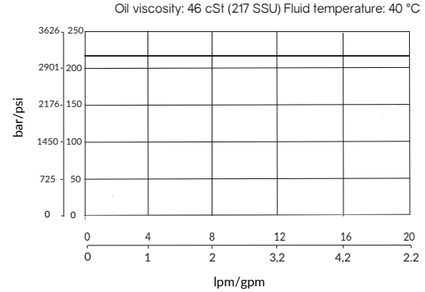

E10N-4B

Inches
Millimeters

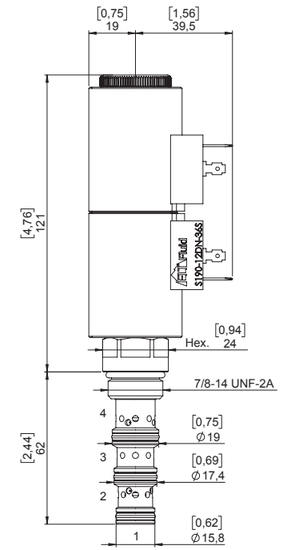

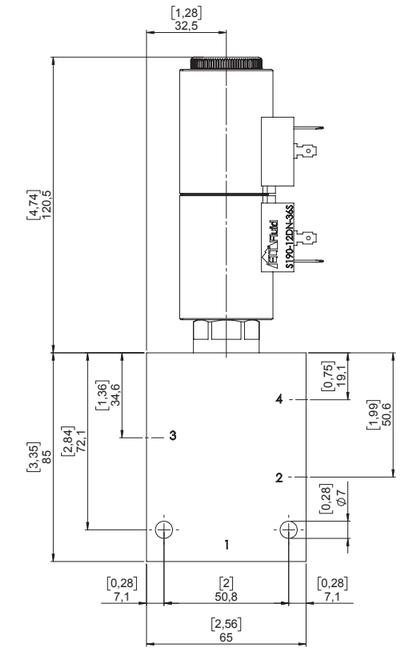

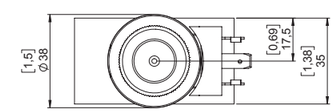

STANDARD HOUSING

Ordering code:	See page 9.03.005
Material:*	Aluminium/Steel Max working pressure for aluminum body: 210 bar Max working pressure for steel body: 350 bar

**Note:* To correctly select the material, in relation to application, see page S.003.

Ordering code

E10N-4B - -

Seals
- None (std. NBR+Polyurethane)
- **Y**- Polyurethane
- For other options contact Sales dept.

*Options**
- None (std. without override)
- **P**- Push
- **L**- Lever

Connector
- **DN**- Din
- **DU**- Deutsch
- **AM**- Amp Junior

Voltage
- None (std. without coil)
- **12**- Vdc
- **24**- Vdc

Material std. housing
- **A**- Aluminium
- **S**- Steel

Housing size ports
- None (std. only cartridge)
- **3B**- 3/8" BSP
- **4B**- 1/2" BSP
- **3S**- SAE 8
- **4S**- SAE 10

**Note:* Information about manual override is available at page S.001

E10N-4C

Solenoid valve 4 ways 3 positions, direct acting spool type

Description

Electric cartridge valve on/off, spool type, 4 ways, 3 positions.

Operation mode

A spring holds the spool in position so that the oil flow is allows all ports (1-2-3-4).
When the S1 solenoid is energized, the spool is shifted (pulled) to allow connection of 4 with 1 and 3 with 2.
When the S2 solenoid is energized, the spool is pushed to permit connection of 3 with 4 and 2 with 1.

GENERAL DATA

Weight without coil: 0,35 Kg (0,77 lbs).
Ambient temperature range: -30 °C a 60 °C with standard seals (NBR).
Max. proof pressure ports 2-3-4: 300 bar (4.350 psi).
Max. proof pressure port 1: 50 bar (725 psi).
Flow Max: 25 l/min (6,6 gpm).
Cartridge materials: high strength steel, internal parts hardened and grinding.

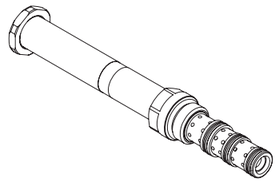

Drawing

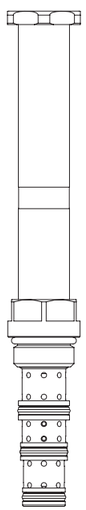

Hydraulic symbol

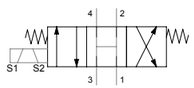

TECHNICAL DATA

HYDRAULIC

Max. working pressure:	250 bar (3.625 psi)
Flow rate:	See performance graph
Fluid: *Viscosity:*	Mineral based oil From 15cSt to 250 cSt
Leakage:	350 cc/min P max. 250 bar (3.625 psi)
Standard seals:	O-ring NBR Seals Polyurethane
Cavity:	SCN1040
Installation torque:	35 Nm
Coil nut torque:	2 Nm
Max contamination level:	NAS 8 ISO 4406 19/17/14
Fluid temperature range:	From -20 °C to +80 °C
Seal kit std.:	5AG0044

ELECTRIC

Type of voltage:	DC
Insulation index:	H
Nominal voltage:	+/- 10 %
Power at 20 °C:	24 W
ED:*	100% with ambient temperature range -20 °C +40 °C
Coil code: *(see page 9.02.001)*	S190-24S

**Note:* For temperature or special conditions contact our sales department.

Pressure drop

Oil viscosity: 46 cSt (217 SSU) Fluid temperature: 40 °C

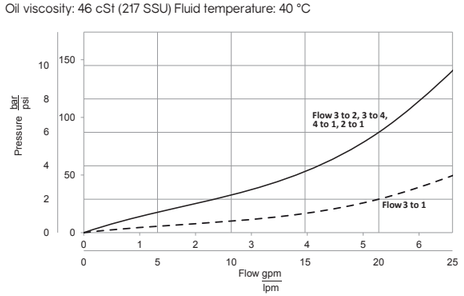

Performance graph

Oil viscosity: 46 cSt (217 SSU) Fluid temperature: 40 °C

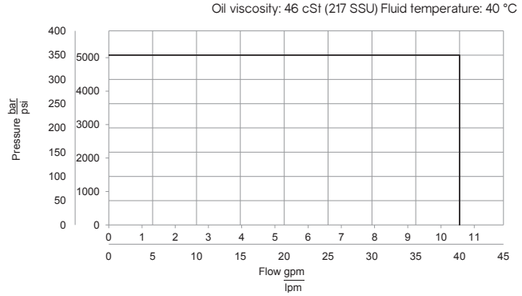

E10N-4C

Inches
Millimeters

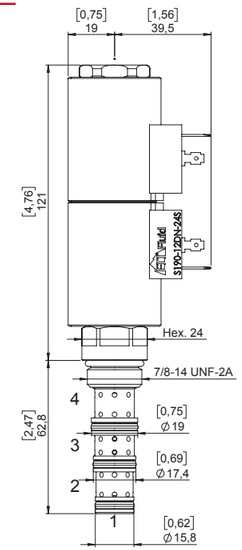

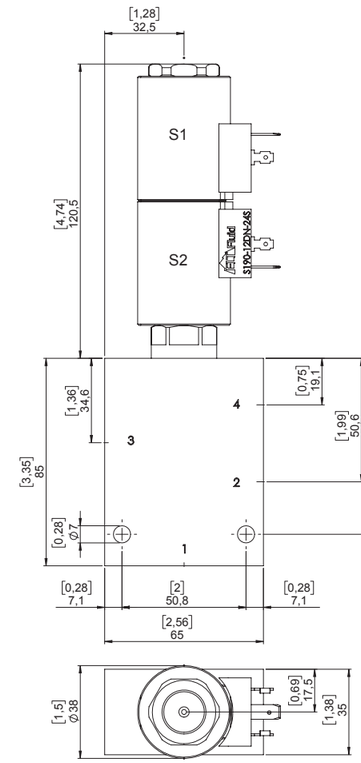

STANDARD HOUSING

Ordering code:	See page 9.03.005
Material:*	Aluminium/Steel Max working pressure for aluminum body: 210 bar Max working pressure for steel body: 350 bar

**Note:* To correctly select the material, in relation to application, see page S.003.

Ordering code

E10N-4C - -

Seals
- None (std. NBR+Polyurethane)
- **Y**- Polyurethane
- For other options contact Sales dept.

*Options**
- None (std. without override)
- **P**- Push
- **L**- Lever

Connector
- **DN**- Din
- **DU**- Deutsch
- **AM**- Amp Junior

Voltage
- None (std. without coil)
- **12**- Vdc
- **24**- Vdc

Material std. housing
- **A**- Aluminium
- **S**- Steel

Housing size ports
- None (std. only cartridge)
- **3B**- 3/8" BSP
- **4B**- 1/2" BSP
- **3S**- SAE 8
- **4S**- SAE 10

**Note:* Information about manual override is available at page S.001

E10N-4D

Solenoid valve 4 ways 3 positions, direct acting spool type

Description
Electric cartridge valve on/off, spool type, 4 ways, 3 positions.

Operation mode
A spring holds the spool in position so that the oil flow is free from 3 to 1, while 2 and 4 are closed.
When the S1 solenoid is energized, the spool is pulled to allow connection of 3 with 2 and 4 with 1.
When the S2 solenoid is energized, the spool is pushed to permit connection of 3 with 4 and 2 with 1.

GENERAL DATA
Weight without coil: 0,35 Kg (0,77 lbs).
Ambient temperature range: -30 °C a 60 °C with standard seals (NBR).
Max. proof pressure ports 2-3-4: 300 bar (4.350 psi).
Max. proof pressure port 1: 50 bar (725 psi).
Flow Max: 25 l/min (6,6 gpm).
Cartridge materials: high strength steel, internal parts hardened and grinding.

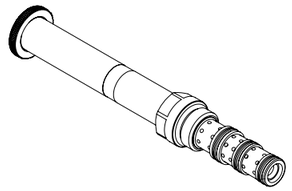

Drawing

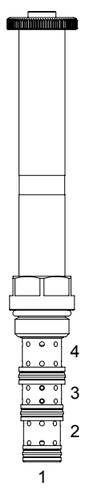

Hydraulic symbol

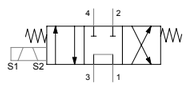

TECHNICAL DATA

HYDRAULIC

Max. working pressure:	250 bar (3.625 psi)
Flow rate:	See performance graph
Fluid: *Viscosity:*	Mineral based oil From 15cSt to 250 cSt
Leakage:	350 cc/min P max. 210 bar (3.045 psi)
Standard seals:	O-ring NBR Seals Polyurethane
Cavity:	SCN1040
Installation torque:	35 Nm
Coil nut torque:	2 Nm
Max contamination level:	NAS 8 ISO 4406 19/17/14
Fluid temperature range:	From -20 °C to +80 °C
Seal kit std.:	5AG0044

ELECTRIC

Type of voltage:	DC
Insulation index:	H
Nominal voltage:	+/- 10 %
Power at 20 °C:	24 W
ED:*	100% with ambient temperature range -20 °C +40 °C
Coil code: *(see page 9.02.001)*	S190-24S

**Note:* For temperature or special conditions contact our sales department.

Pressure drop

Oil viscosity: 46 cSt (217 SSU) Fluid temperature: 40 °C

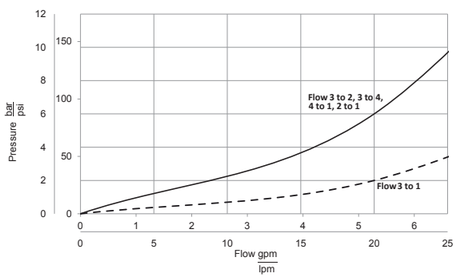

Performance graph

Oil viscosity: 46 cSt (217 SSU) Fluid temperature: 40 °C

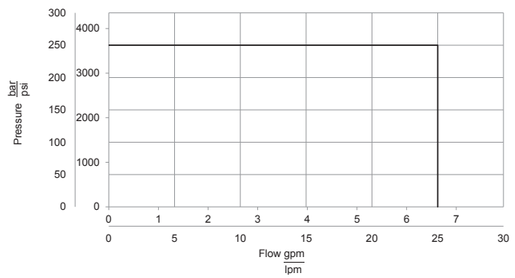

E10N-4D

Inches
Millimeters

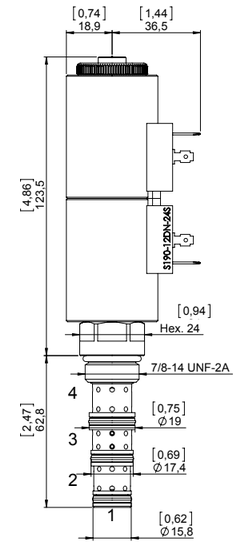

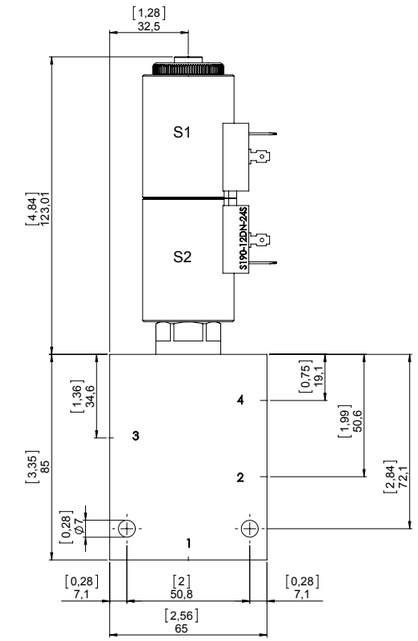

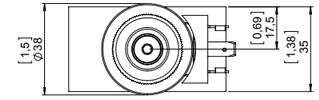

STANDARD HOUSING

Ordering code:	See page 9.03.005
Material:*	Aluminium/Steel Max working pressure for aluminum body: 210 bar Max working pressure for steel body: 350 bar

**Note:* To correctly select the material, in relation to application, see page S.003.

Ordering code

E10N-4D - -

Seals
- None (std. NBR+Polyurethane)
- **Y**- Polyurethane
- For other options contact Sales dept.

*Options**
- None (std. without override)
- **P**- Push
- **L**- Lever

Connector
- **DN**- Din
- **DU**- Deutsch
- **AM**- Amp Junior

Voltage
- None (std. without coil)
- **12**- Vdc
- **24**- Vdc

Material std. housing
- **A**- Aluminium
- **S**- Steel

Housing size ports
- None (std. only cartridge)
- **3B**- 3/8" BSP
- **4B**- 1/2" BSP
- **3S**- SAE 8
- **4S**- SAE 10

**Note:* Information about manual override is available at page S.001

E10NH-4C

Solenoid valve 4 ways 3 positions, direct acting spool type

Description

Electric cartridge valve on/off, spool type, 4 ways, 3 positions.

Operation mode

A spring holds the spool in position so that the oil flow is stopped in all ports (1-2-3-4).
When the S1 solenoid is energized, the spool is pulled to allow connection of 3 with 2 and 4 with 1.
When the S2 solenoid is energized, the spool is pushed to permit connection of 3 with 4 and 2 with 1.

GENERAL DATA

Weight without coil: 0,35 Kg (0,77 lbs).
Ambient temperature range: -30 °C a 60 °C with standard seals (NBR).
Max. proof pressure ports 1-2-3-4: 420 bar (6.090 psi).
Flow Max: 40 l/min (10,6 gpm).
Cartridge materials: high strength steel, internal parts hardened and grinding.

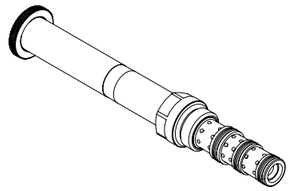

Drawing

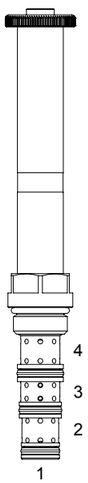

Hydraulic symbol

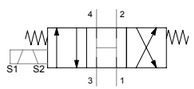

TECHNICAL DATA

HYDRAULIC

Max. working pressure:	350 bar (5.076 psi)
Flow rate:	See performance graph
Fluid: *Viscosity:*	Mineral based oil From 15cSt to 250 cSt
Leakage:	470 cc/min P max. 350 bar (5.076 psi)
Standard seals:	O-ring NBR Seals Polyurethane
Cavity:	SCN1040
Installation torque:	35 Nm
Coil nut torque:	2 Nm
Max contamination level:	NAS 8 ISO 4406 19/17/14
Fluid temperature range:	From -20 °C to +80 °C
Seal kit std.:	5AG0044

ELECTRIC

Type of voltage:	DC
Insulation index:	H
Nominal voltage:	+/- 10 %
Power at 20 °C:	36 W
ED:*	100% with ambient temperature range -20 °C +40 °C
Coil code: *(see page 9.02.001)*	S190-26S

**Note:* For temperature or special conditions contact our sales department.

Pressure drop

Oil viscosity: 46 cSt (217 SSU) Fluid temperature: 40 °C

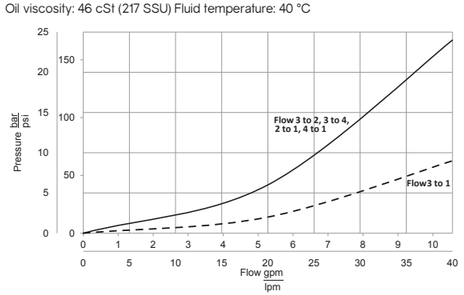

Performance graph

Oil viscosity: 46 cSt (217 SSU) Fluid temperature: 40 °C

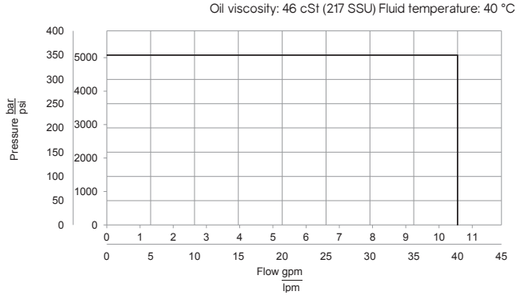

E10NH-4C

Inches
Millimeters

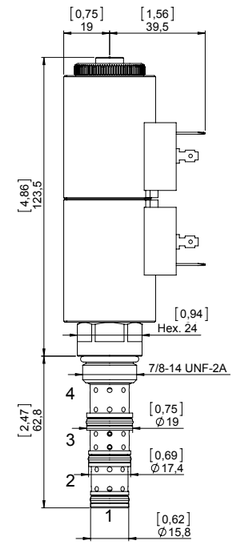

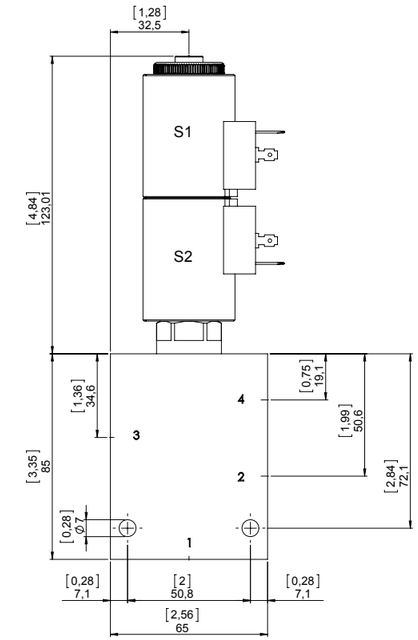

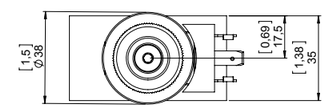

STANDARD HOUSING

Ordering code:	See page 9.03.005
Material:*	Aluminium/Steel Max working pressure for aluminum body: 210 bar Max working pressure for steel body: 350 bar

**Note:* To correctly select the material, in relation to application, see page S.003.

Ordering code

E10NH-4C - -

Seals
- None (std. NBR+Polyurethane)
- **Y**- Polyurethane
- For other options contact Sales dept.

*Options**
- None (std. without override)
- **P**- Push
- **L**- Lever

Connector
- **DN**- Din
- **DU**- Deutsch
- **AM**- Amp Junior

Voltage
- None (std. without coil)
- **12**- Vdc
- **24**- Vdc

Material std. housing
- **A**- Aluminium
- **S**- Steel

Housing size ports
- None (std. only cartridge)
- **3B**- 3/8" BSP
- **4B**- 1/2" BSP
- **3S**- SAE 8
- **4S**- SAE 10

**Note:* Information about manual override is available at page S.001

E10NH-4D

Solenoid valve 4 ways 3 positions, direct acting spool type

Description

Electric cartridge valve on/off, spool type, 4 ways, 3 positions.

Operation mode

A spring holds the spool in position so that the oil flow is free from 3 to 1, while 2 and 4 are closed.
When the S1 solenoid is energized, the spool is pulled to allow connection of 3 with 2 and 4 with 1.
When the S2 solenoid is energized, the spool is pushed to permit connection of 3 with 4 and 2 with 1.

GENERAL DATA

Weight without coil: 0,35 Kg (0,77 lbs).
Ambient temperature range: -30 °C a 60 °C with standard seals (NBR).
Max. proof pressure ports 1-2-3-4: 420 bar (6.090 psi).
Flow Max: 40 l/min (10,6 gpm).
Cartridge materials: high strength steel, internal parts hardened and grinding.

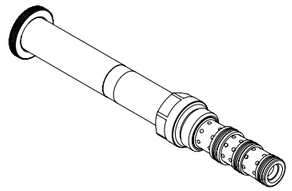

Drawing

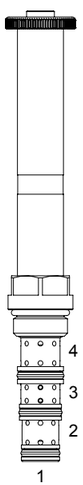

Hydraulic symbol

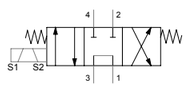

TECHNICAL DATA

HYDRAULIC

Max. working pressure:	350 bar (5.075 psi)
Flow rate:	See performance graph
Fluid: *Viscosity:*	Mineral based oil From 15cSt to 250 cSt
Leakage:	470 cc/min P max. 350 bar (5.075 psi)
Standard seals:	O-ring NBR Seals Polyurethane
Cavity:	SCN1040
Installation torque:	40 Nm
Coil nut torque:	2 Nm
Max contamination level:	NAS 8 ISO 4406 19/17/14
Fluid temperature range:	From -20 °C to +80 °C
Seal kit std.:	5AG0044

ELECTRIC

Type of voltage:	DC
Insulation index:	H
Nominal voltage:	+/- 10 %
Power at 20 °C:	36 W
ED:*	100% with ambient temperature range -20 °C +40 °C
Coil code: *(see page 9.02.001)*	S190-26S

**Note:* For temperature or special conditions contact our sales department.

Pressure drop

Oil viscosity: 46 cSt (217 SSU) Fluid temperature: 40 °C

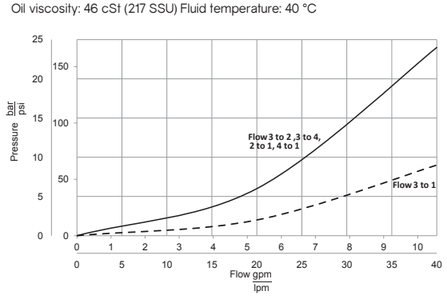

Performance graph

Oil viscosity: 46 cSt (217 SSU) Fluid temperature: 40 °C

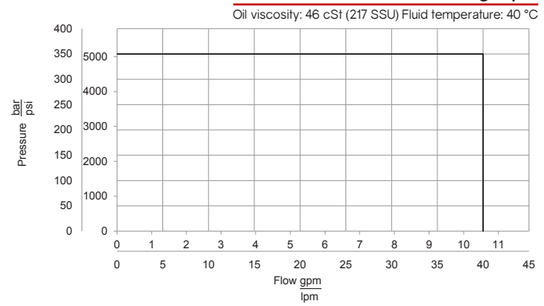

E10NH-4D

Inches
Millimeters

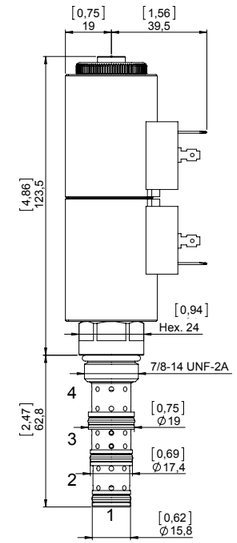

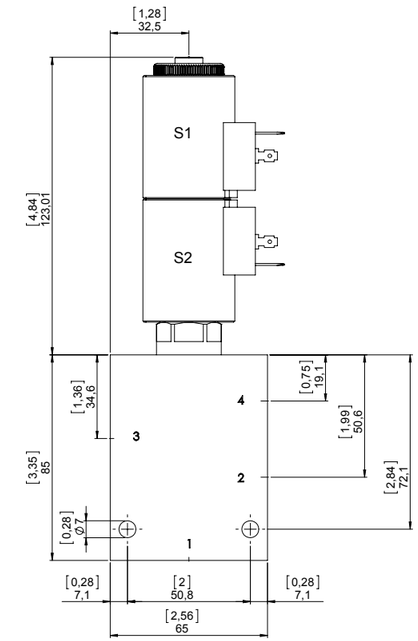

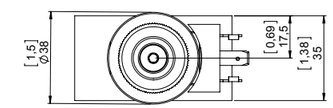

STANDARD HOUSING

Ordering code:	See page 9.03.005
Material:*	Aluminium/Steel Max working pressure for aluminum body: 210 bar Max working pressure for steel body: 350 bar

**Note:* To correctly select the material, in relation to application, see page S.003.

Ordering code

E10NH-4D - -

Seals
- None (std. NBR+Polyurethane)
- **Y**- Polyurethane
- For other options contact Sales dept.

*Options**
- None (std. without override)
- **P**- Push
- **L**- Lever

Connector
- **DN**- Din
- **DU**- Deutsch
- **AM**- Amp Junior

Voltage
- None (std. without coil)
- **12**- Vdc
- **24**- Vdc

Material std. housing
- **A**- Aluminium
- **S**- Steel

Housing size ports
- None (std. only cartridge)
- **3B**- 3/8" BSP
- **4B**- 1/2" BSP
- **3S**- SAE 8
- **4S**- SAE 10

**Note:* Information about manual override is available at page S.001

E08N-5M

Solenoid valve 5 ways 3 positions, direct acting spool type Closed Center

Description

Electric cartridge valve on/off, spool type, 5 ways, 3 positions, with integrated load-sense port and closed center spool.

Operation mode

A spring holds the spool in center position so that the oil flow is stopped in all ports while ports 3 is connected to 1.
When solenoid S1 is energized the spool is pulled to allow flow from 5 to 2 and from 4 to 3.
When solenoid S2 is energized the spool is shifted (pushed) to allow flow from 5 to 4 and from 2 to 3. Load sense port 1 is connected to port 5 when spool is shifted.

GENERAL DATA

Weight without coil: 0,19 Kg (0,42 lbs).
Ambient temperature range: -30 °C a 60 °C with standard seals (NBR).
Max. proof pressure ports 1-2-3-4: 300 bar (4.350 psi).
Flow Max: 13 l/min (3,5 gpm).
Cartridge materials: high strength steel, internal parts hardened and grinding.

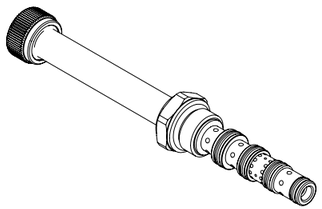

Drawing

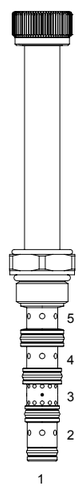

Hydraulic symbol

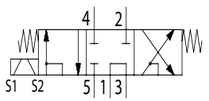

TECHNICAL DATA

HYDRAULIC	
Max. working pressure:	250 bar (3.625 psi)
Flow rate:	See performance graph
Fluid: *Viscosity:*	Mineral based oil From 15cSt to 250 cSt
Leakage:	200 cc/min P max. 210 bar (3.045 psi)
Standard seals:	O-ring NBR Seals Polyurethane
Cavity:	SCN0850
Installation torque:	27 Nm
Coil nut torque:	2 Nm
Max contamination level:	NAS 8 ISO 4406 19/17/14
Fluid temperature range:	From -20 °C to +80 °C
Seal kit std.:	5AG0045
ELECTRIC	
Type of voltage:	DC
Insulation index:	H
Nominal voltage:	+/- 10 %
Power at 20 °C:	20,5 W
ED:*	100% with ambient temperature range -20 °C +40 °C
Coil code: *(see page 9.01.002)*	S130-20S

**Note:* For temperature or special conditions contact our sales department.

Pressure drop

Oil viscosity: 46 cSt (217 SSU) Fluid temperature: 40 °C

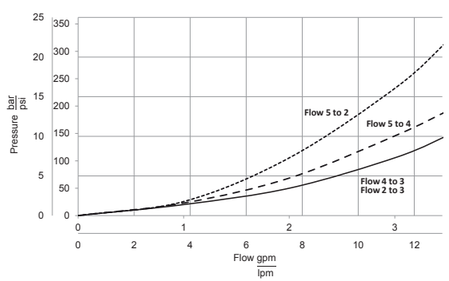

Performance graph

Oil viscosity: 46 cSt (217 SSU) Fluid temperature: 40 °C

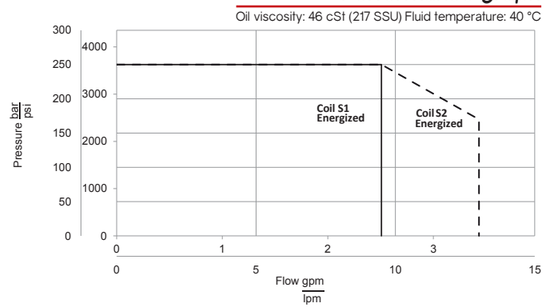

E08N-5M

Inches
Millimeters

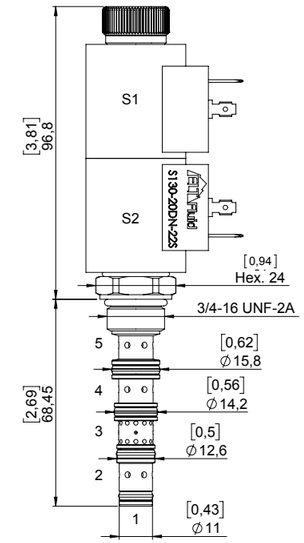

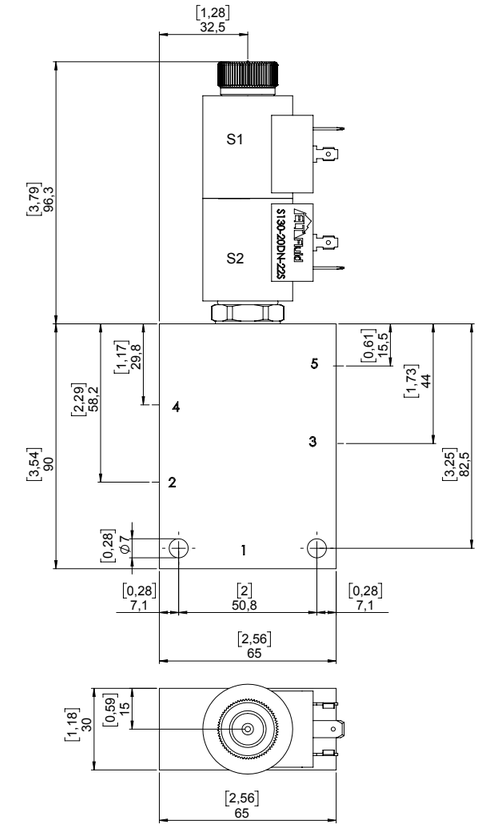

STANDARD HOUSING

Ordering code:	See page 9.02.006
Material:*	Aluminium/Steel Max working pressure for aluminum body: 210 bar Max working pressure for steel body: 350 bar

**Note:* To correctly select the material, in relation to application, see page S.003.

Ordering code

E08N-5M - -

Seals
- None (std. NBR+Polyurethane)
- **Y**- Polyurethane
- For other options contact Sales dept.

*Options**
- None (std. without override)
- **PP**- Push&Pull

Connector
- **DN**- Din
- **DU**- Deutsch
- **AM**- Amp Junior

Voltage
- None (std. without coil)
- **12**- Vdc
- **24**- Vdc

Material std. housing
- **A**- Aluminium
- **S**- Steel

Housing size ports
- None (std. only cartridge)
- **2B**- 1/4" BSP
- **3B**- 3/8" BSP
- **2S**- SAE 6
- **3S**- SAE 8

**Note:* Information about manual override is available at page S.001

Elt Fluid S.r.l.
Via Ganapini, 15/2
Loc. Felina 42035
Castelnovo ne' Monti (RE) ITALY
mail: info@eltfluid.com
P.IVA/C.F 02573790355

E08N-5W

Solenoid valve 5 ways 3 positions, direct acting spool type "Motor spool"

Description

Electric cartridge valve on/off, spool type, 5 ways, 3 positions, with integrated load-sense port and "Motor spool".

Operation mode

A spring holds the spool in center position so that port 2,4,1 and 3 are connected while port 5 is closed.
When solenoid S1 is energized the spool is pulled to allow flow from 5 to 2 and from 4 to 3.
When solenoid S2 is energized the spool is pushed to allow flow from 4 to 3 and from 5 to 2. Load sense port 1 is connected to port 5 when spool is shifted.

GENERAL DATA

Weight without coil: 0,19 Kg (0,42 lbs).
Ambient temperature range: -30 °C a 60 °C with standard seals (NBR).
Max. proof pressure ports 1-2-3-4: 300 bar (4.350 psi).
Flow Max: 13 l/min (3,5 gpm).
Cartridge materials: high strength steel, internal parts hardened and grinding.

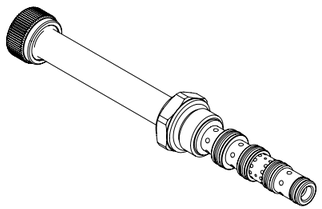

Drawing

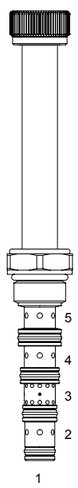

Hydraulic symbol

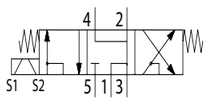

TECHNICAL DATA

HYDRAULIC	
Max. working pressure:	250 bar (3.625 psi)
Flow rate:	See performance graph
Fluid: *Viscosity:*	Mineral based oil From 15cSt to 250 cSt
Leakage:	200 cc/min P max. 210 bar (3.045 psi)
Standard seals:	O-ring NBR Seals Polyurethane
Cavity:	SCN0850
Installation torque:	27 Nm
Coil nut torque:	2 Nm
Max contamination level:	NAS 8 ISO 4406 19/17/14
Fluid temperature range:	From -20 °C to +80 °C
Seal kit std.:	5AG0045
ELECTRIC	
Type of voltage:	DC
Insulation index:	H
Nominal voltage:	+/- 10 %
Power at 20 °C:	20,5 W
ED:*	100% with ambient temperature range -20 °C +40 °C
Coil code: *(see page 9.01.002)*	S130-20S

**Note:* For temperature or special conditions contact our sales department.

Pressure drop

Oil viscosity: 46 cSt (217 SSU) Fluid temperature: 40 °C

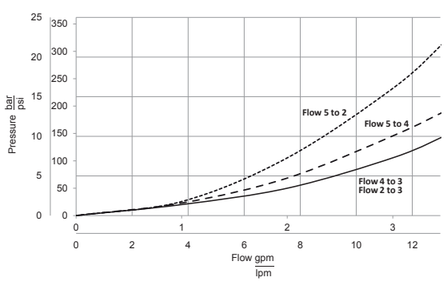

Performance graph

Oil viscosity: 46 cSt (217 SSU) Fluid temperature: 40 °C

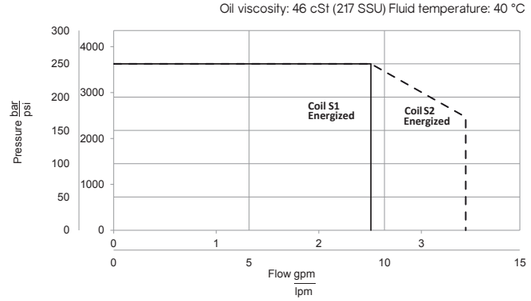

E08N-5W

Inches
Millimeters

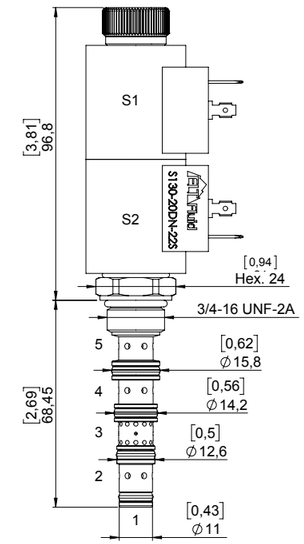

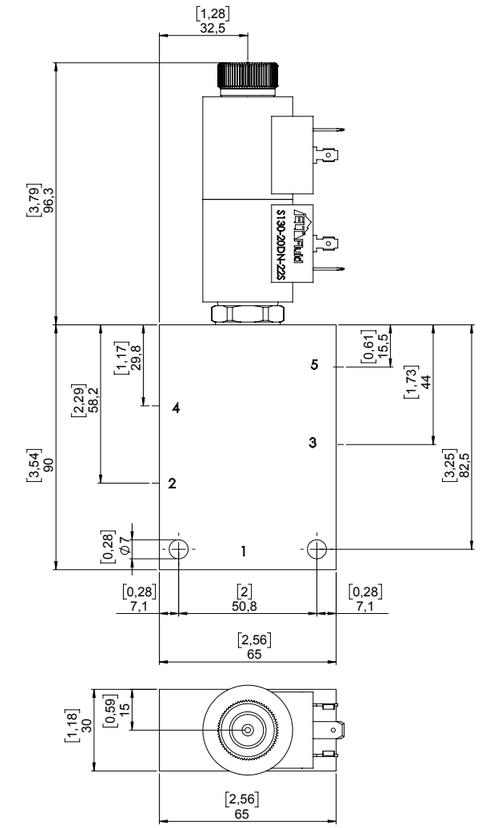

STANDARD HOUSING

Ordering code:	See page 9.02.006
Material:*	Aluminium/Steel Max working pressure for aluminum body: 210 bar Max working pressure for steel body: 350 bar

**Note:* To correctly select the material, in relation to application, see page S.003.

Ordering code

E08N-5W - -

Seals
- None (std. NBR+Polyurethane)
- **Y**- Polyurethane
- For other options contact Sales dept.

*Options**
- None (std. without override)
- **PP**- Push&Pull

Connector
- **DN**- Din
- **DU**- Deutsch
- **AM**- Amp Junior

Voltage
- None (std. without coil)
- **12**- Vdc
- **24**- Vdc

Material std. housing
- **A**- Aluminium
- **S**- Steel

Housing size ports
- None (std. only cartridge)
- **2B**- 1/4" BSP
- **3B**- 3/8" BSP
- **2S**- SAE 6
- **3S**- SAE 8

**Note:* Information about manual override is available at page S.001

Elt Fluid S.r.l.
Via Ganapini, 15/2
Loc. Felina 42035
Castelnovo ne' Monti (RE) ITALY
mail: info@eltfluid.com
P.IVA/C.F 02573790355

Electric valves On-Off 1.

Electro-proportional valves 2.

Pressure control valves 3.

Flow control valves 4.

Directional control valves 5.

Load control valves 6.

Special solutions 7.

Coils Standard bodies Cavity 8. 9. 10.

Service (Emergency manual override, general conditions, technical specifications) S.

E08P-20

Electro proportional valve 2 ways 2 positions, poppet pilot operated, normally closed

Description

Electro proportional cartridge valve 2 ways 2 positions poppet type normally closed, for locking flow direction or load-holding applications.

Operation mode

When the coil is de-energized, the valve works as a check valve, allowing flow from 1 to 2, while blocking flow from 2 to 1.
When energized, the cartridge's poppet lifts allowing flow from port 2 to 1. Flow is proportional to current applied to the coil. Flow output at port 1 may change based on working pressure.

GENERAL DATA

Weight without coil: 0,16 Kg (0,35 lbs).
Ambient temperature range: -30 °C a 60 °C with standard seals (NBR).
Max. proof pressure: 300 bar (4.350 psi).
Flow Max: 20 l/min (5,3 gpm).
Cartridge materials: high strength steel, internal parts hardened and grinding.

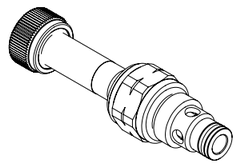

Drawing

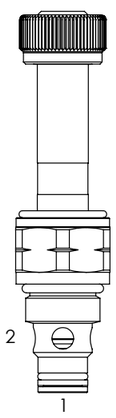

Hydraulic symbol

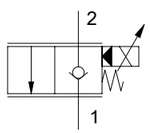

TECHNICAL DATA

HYDRAULIC	
Max. working pressure:	210 bar (3.045 psi)
Flow rate:	See performance graph
Fluid: *Viscosity:*	Mineral based oil From 15cSt to 250 cSt
Leakage:	0,25 cc/min (5 drops/min) P max. 350 bar (5.075 psi)
Standard seals:	O-ring NBR Back up ring PTFE
Cavity:	SCN0820
Installation torque:	27 Nm
Coil nut torque:	2 Nm
Max contamination level:	NAS 8 ISO 4406 19/17/14
Fluid temperature range:	From -20 °C to +80 °C
Seal kit std.:	5AG0024
ELECTRIC	
Type of feeding:	PWM constant current
Insulation index:	H
Hysteresis:	+/- 5 %
Max current 12 Vcc:	1500 mA
Max current 24 Vcc:	750 mA
PWM:*	100 Hz
Coil code: *(see page 9.01.003)*	S130-22S

**Note:* For temperature or special conditions contact our sales department.

Pressure drop

Oil viscosity: 46 cSt (217 SSU) Fluid temperature: 40 °C

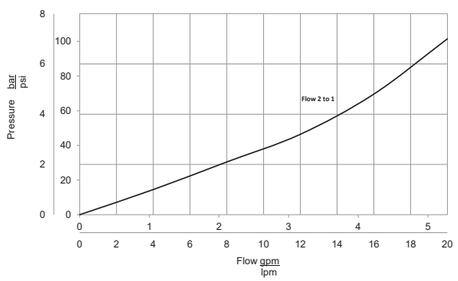

Performance graph

Oil viscosity: 46 cSt (217 SSU) Fluid temperature: 40 °C

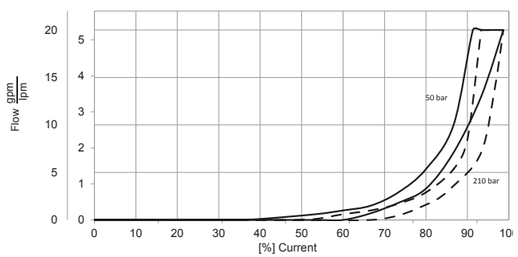

E08P-20

Inches
Millimeters

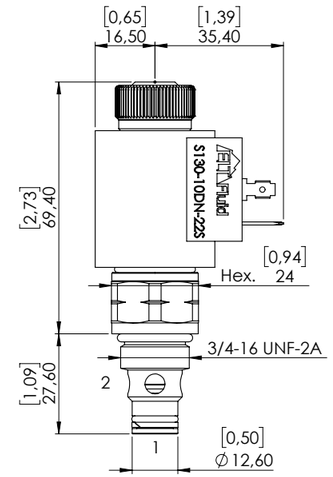

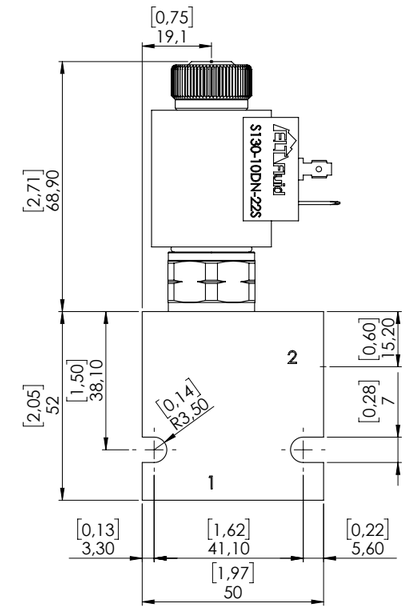

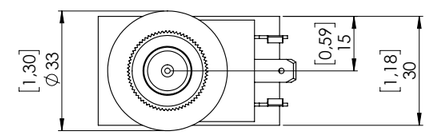

STANDARD HOUSING

Ordering code:	See page 9.02.001
Material:*	Aluminium/Steel Max working pressure for aluminum body: 210 bar Max working pressure for steel body: 350 bar

**Note:* To correctly select the material, in relation to application, see page S.003.

Ordering code

E08P-20 - -

Seals
- None (std. NBR+PTFE)
- **Y**- Polyurethane
- For other options contact Sales dept.

*Options**
- None (std. without override)
- **S**- Screw out

Connector
- **DN**- Din
- **DU**- Deutsch
- **AM**- Amp Junior

Voltage
- None (std. without coil)
- **12**- Vdc
- **24**- Vdc

Material std. housing
- **A**- Aluminium
- **S**- Steel

Housing size ports
- None (std. only cartridge)
- **2B**- 1/4" BSP
- **3B**- 3/8" BSP
- **2S**- SAE 6
- **3S**- SAE 8

**Note:* Information about manual override is available at page S.001

E08PH-20

Electro proportional valve 2 ways 2 positions, poppet pilot operated, normally closed

Description

Electro proportional cartridge valve 2 ways 2 positions poppet type normally closed, for locking flow direction or load-holding applications.

Operation mode

When the coil is de-energized, the valve works as a check valve, allowing flow from 1 to 2, while blocking flow from 2 to 1.
When energized, the cartridge's poppet lifts allowing flow from port 2 to 1. Flow is proportional to current applied to the coil. Flow output at port 1 may change based on working pressure.

GENERAL DATA

Weight without coil: 0,22 Kg (0,48 lbs).
Ambient temperature range: -30 °C a 60 °C with standard seals (NBR).
Max. proof pressure: 350 bar (5.075 psi).
Flow Max: 40 l/min (10,7 gpm).
Cartridge materials: high strength steel, internal parts hardened and grinding.

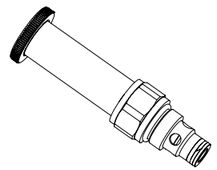

Drawing

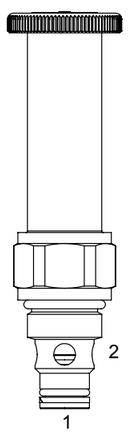

Hydraulic symbol

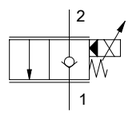

TECHNICAL DATA

HYDRAULIC

Max. working pressure:	300 bar (4.350 psi)
Flow rate:	See performance graph
Fluid: *Viscosity:*	Mineral based oil From 15cSt to 250 cSt
Leakage:	0,25 cc/min (5 drops/min) P max. 350 bar (5.075 psi)
Standard seals:	O-ring NBR Back up ring PTFE
Cavity:	SCN0820
Installation torque:	27 Nm
Coil nut torque:	2 Nm
Max contamination level:	NAS 8 ISO 4406 19/17/14
Fluid temperature range:	From -20 °C to +80 °C
Seal kit std.:	5AG0024

ELECTRIC

Type of feeding:	PWM constant current
Insulation index:	H
Hysteresis:	+/- 5 %
Max current 12 Vcc:	1800 mA
Max current 24 Vcc:	900 mA
PWM:*	100 Hz
Coil code: *(see page 9.02.002)*	S190-26S

**Note:* For temperature or special conditions contact our sales department.

Pressure drop

Oil viscosity: 46 cSt (217 SSU) Fluid temperature: 40 °C

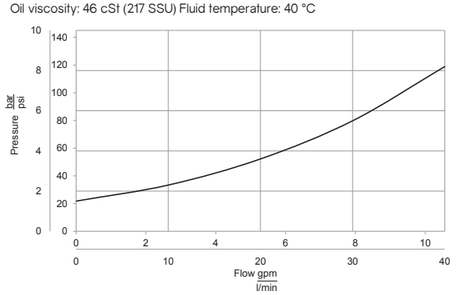

Performance graph

Oil viscosity: 46 cSt (217 SSU) Fluid temperature: 40 °C

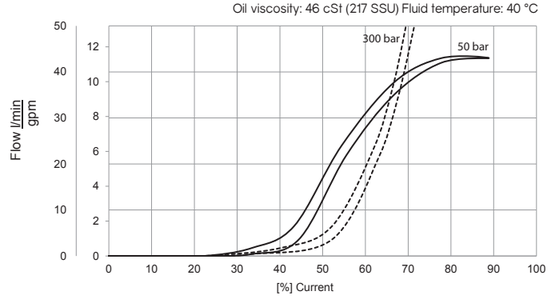

E08PH-20

Inches
Millimeters

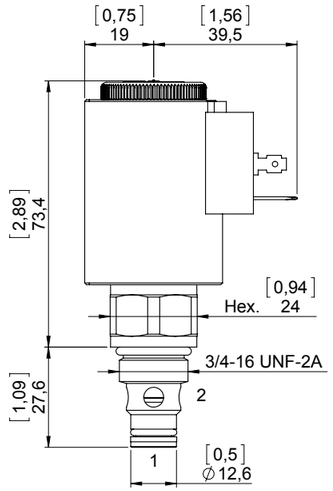

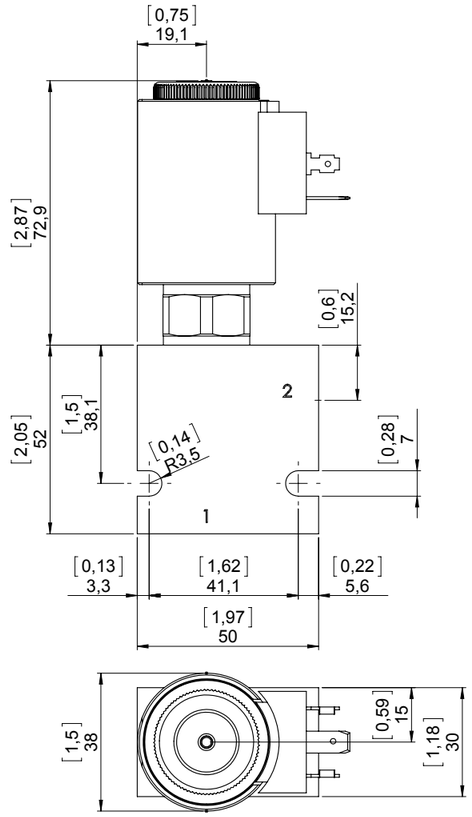

STANDARD HOUSING

Ordering code:	See page 9.02.001
Material:*	Aluminium/Steel Max working pressure for aluminum body: 210 bar Max working pressure for steel body: 350 bar

**Note:* To correctly select the material, in relation to application, see page S.003.

Ordering code

E08PH-20 - -

Seals
- None (std. NBR+PTFE)
- **Y**- Polyurethane
- For other options contact Sales dept.

*Options**
- None (std. without override)
- **S**- Screw out

Connector
- **DN**- Din
- **DU**- Deutsch
- **AM**- Amp Junior

Voltage
- None (std. without coil)
- **12**- Vdc
- **24**- Vdc

Material std. housing
- **A**- Aluminium
- **S**- Steel

Housing size ports
- None (std. only cartridge)
- **2B**- 1/4" BSP
- **3B**- 3/8" BSP
- **2S**- SAE 6
- **3S**- SAE 8

**Note:* Information about manual override is available at page S.001

E08P-21

Electro proportional valve 2 ways 2 positions, poppet pilot operated, normally open

Description

Electro proportional cartridge valve 2 ways 2 positions poppet type normally open, for locking flow direction or load-holding applications.

Operation mode

When the coil is de-energized, the valve allow flow from 2 to 1.
When the valve is partially energized, the valve begins to throttle the flow from 2 to 1. When fully energized, the poppet block the flow from 2 to 1.

GENERAL DATA

Weight without coil: 0,15 Kg (0,3 lbs).
Ambient temperature range: -30 °C a 60 °C with standard seals (NBR).
Max. proof pressure: 300 bar (4.350 psi).
Flow Max: 20 l/min (5,3 gpm).
Cartridge materials: high strength steel, internal parts hardened and grinding.

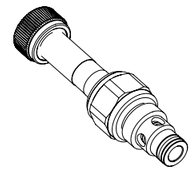

Drawing

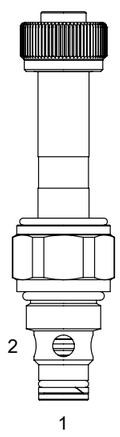

Hydraulic symbol

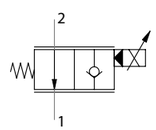

TECHNICAL DATA

HYDRAULIC	
Max. working pressure:	210 bar (3.045 psi)
Flow rate:	See performance graph
Fluid: *Viscosity:*	Mineral based oil From 15cSt to 250 cSt
Leakage:	0,25 cc/min (5 drops/min) P max. 350 bar (5.075 psi)
Standard seals:	O-ring NBR Back up ring PTFE
Cavity:	SCN0820
Installation torque:	27 Nm
Coil nut torque:	2 Nm
Max contamination level:	NAS 8 ISO 4406 19/17/14
Fluid temperature range:	From -20 °C to +80 °C
Seal kit std.:	5AG0024
ELECTRIC	
Type of feeding:	PWM constant current
Insulation index:	H
Hysteresis:	+/- 5 %
Max current 12 Vcc:	1500 mA
Max current 24 Vcc:	750 mA
PWM:*	100 Hz
Coil code: *(see page 9.01.003)*	S130-22S

**Note:* For temperature or special conditions contact our sales department.

Pressure drop

Oil viscosity: 46 cSt (217 SSU) Fluid temperature: 40 °C

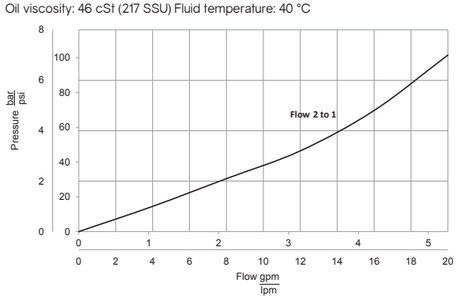

Performance graph

Oil viscosity: 46 cSt (217 SSU) Fluid temperature: 40 °C
At imput flow 20 l/min (5,3 gpm)

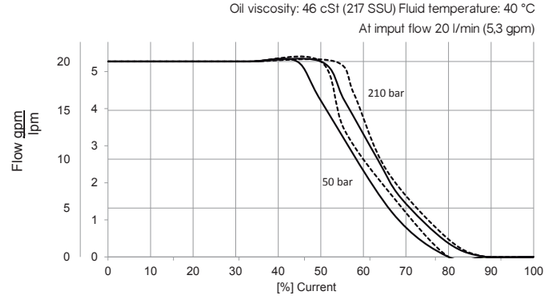

E08P-21

Inches
Millimeters

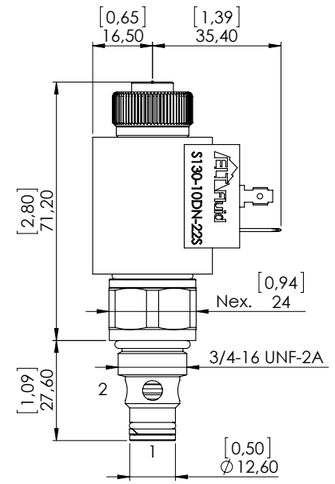

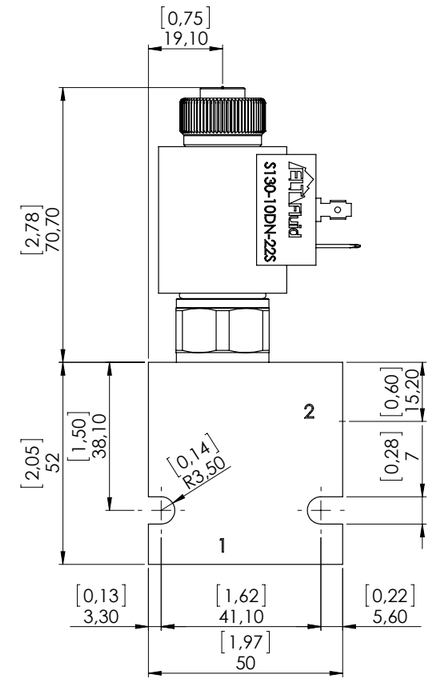

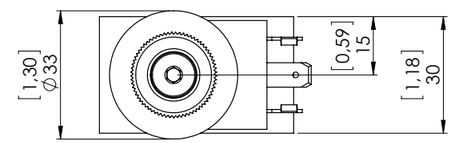

STANDARD HOUSING

Ordering code:	See page 9.02.001
Material:*	Aluminium/Steel Max working pressure for aluminum body: 210 bar Max working pressure for steel body: 350 bar

**Note:* To correctly select the material, in relation to application, see page S.003.

Ordering code

E08P-21 - -

Seals
- None (std. NBR+PTFE)
- **Y**- Polyurethane
- For other options contact Sales dept.

*Options**
- None (std. without override)
- **P**- Push
- **SV** - Screw in

Connector
- **DN**- Din
- **DU**- Deutsch
- **AM**- Amp Junior

Voltage
- None (std. without coil)
- **12**- Vdc
- **24**- Vdc

Material std. housing
- **A**- Aluminium
- **S**- Steel

Housing size ports
- None (std. only cartridge)
- **2B**- 1/4" BSP
- **3B**- 3/8" BSP
- **2S**- SAE 6
- **3S**- SAE 8

**Note:* Information about manual override is available at page S.001

E10P-20

Electro proportional valve 2 ways 2 positions, poppet pilot operated, normally closed

Description

Electro proportional cartridge valve 2 ways 2 positions poppet type normally closed, for locking flow direction or load-holding applications.

Operation mode

When the coil is de-energized, the valve works as a check valve, allowing flow from 1 to 2, while blocking flow from 2 to 1.
When energized, the cartridge's poppet lifts allowing flow from port 2 to 1. Flow is proportional to current applied to the coil. Flow output at port 1 may change based on working pressure.

GENERAL DATA

Weight without coil: 0,24 Kg (0,52 lbs).
Ambient temperature range: -30 °C a 60 °C with standard seals (NBR).
Max. proof pressure: 350 bar (5.075 psi).
Flow Max: 60 l/min (15,8 gpm).
Cartridge materials: high strength steel, internal parts hardened and grinding.

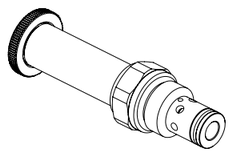

Drawing

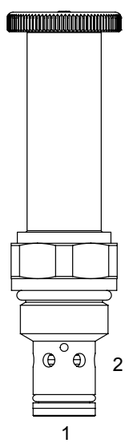

Hydraulic symbol

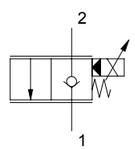

TECHNICAL DATA

HYDRAULIC

Max. working pressure:	300 bar (4.350 psi)
Flow rate:	See performance graph
Fluid: *Viscosity:*	Mineral based oil From 15cSt to 250 cSt
Leakage:	0,25 cc/min (5 drops/min) P max. 210 bar (3.045 psi)
Standard seals:	O-ring NBR Seals Polyurethane
Cavity:	SCN1020
Installation torque:	40 Nm
Coil nut torque:	2 Nm
Max contamination level:	NAS 8 ISO 4406 19/17/14
Fluid temperature range:	From -20 °C to +80 °C
Seal kit std.:	5AG0025

ELECTRIC

Type of feeding:	PWM constant current
Insulation index:	H
Nominal voltage:	+/- 10 %
Max current 12 Vcc:	1800 mA
Max current 24 Vcc:	900 mA
PWM:*	100 Hz
Coil code: *(see page 9.02.002)*	S190-26S

**Note:* For temperature or special conditions contact our sales department.

Pressure drop

Oil viscosity: 46 cSt (217 SSU) Fluid temperature: 40 °C

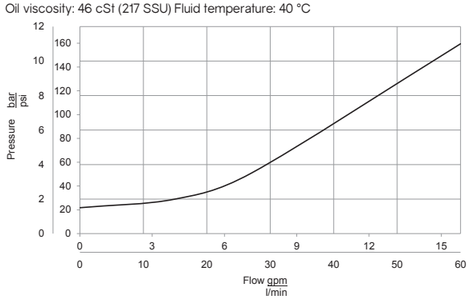

Performance graph

Oil viscosity: 46 cSt (217 SSU) Fluid temperature: 40 °C

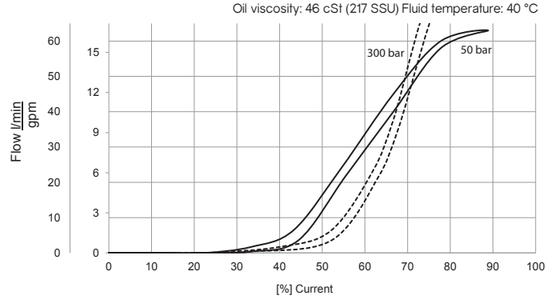

E10P-20

Inches
Millimeters

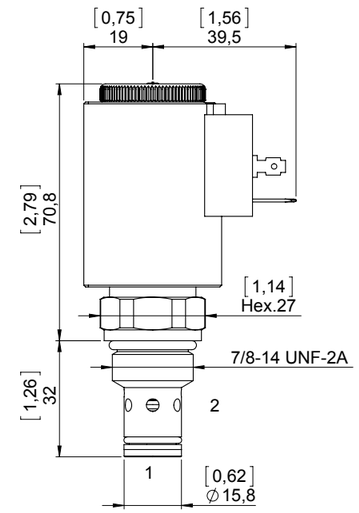

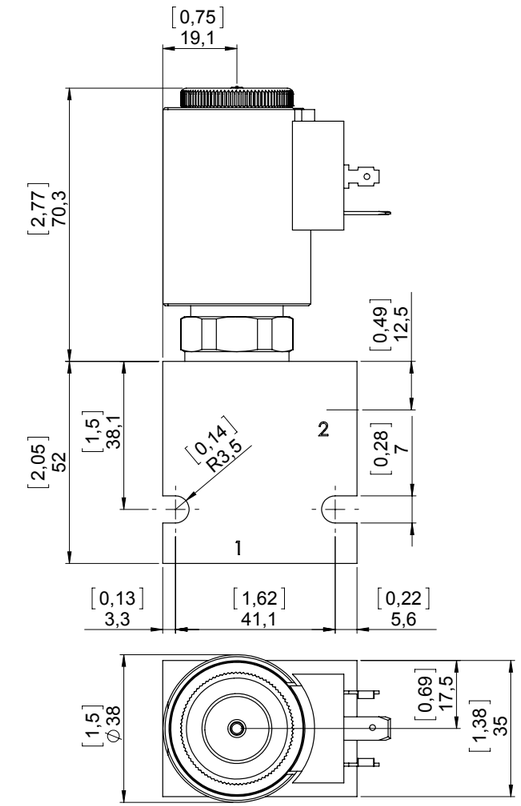

STANDARD HOUSING

Ordering code:	See page 9.03.001
Material:*	Aluminium/Steel Max working pressure for aluminum body: 210 bar Max working pressure for steel body: 350 bar

**Note:* To correctly select the material, in relation to application, see page S.003.

Ordering code

E10P-20 - -

Seals
- None (std. NBR+PTFE)
- **Y**- Polyurethane
- For other options contact Sales dept.

*Options**
- None (std. without override)
- **S**- Screw out

Connector
- **DN**- Din
- **DU**- Deutsch
- **AM**- Amp Junior

Voltage
- None (std. without coil)
- **12**- Vdc
- **24**- Vdc

Material std. housing
- **A**- Aluminium
- **S**- Steel

Housing size ports
- None (std. only cartridge)
- **3B**- 3/8" BSP
- **4B**- 1/2" BSP
- **3S**- SAE 8
- **4S**- SAE 10

**Note:* Information about manual override is available at page S.001

E10P-21

Electro proportional valve 2 ways 2 positions, poppet pilot operated, normally open

Description

Electro proportional cartridge valve 2 ways 2 positions poppet type normally open, for locking flow direction or load-holding applications.

Operation mode

When the coil is de-energized, the valve allow flow from 2 to 1.
When the valve is partially energized, the valve begins to throttle the flow from 2 to 1. When fully energized, the poppet block the flow from 2 to 1.

GENERAL DATA

Weight without coil: 0,24 Kg (0,52 lbs).
Ambient temperature range: -30 °C a 60 °C with standard seals (NBR).
Max. proof pressure: 350 bar (5.075 psi).
Flow Max: 60 l/min (15,8 gpm).
Cartridge materials: high strength steel, internal parts hardened and grinding.

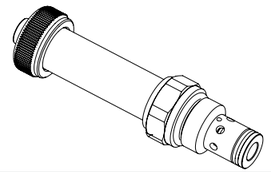

Drawing

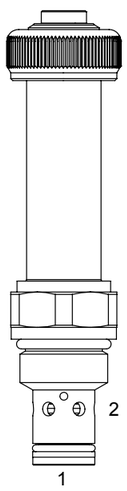

Hydraulic symbol

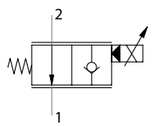

TECHNICAL DATA

HYDRAULIC

Max. working pressure:	300 bar (4.350 psi)
Flow rate:	See performance graph
Fluid: *Viscosity:*	Mineral based oil From 15cSt to 250 cSt
Leakage:	0,25 cc/min (5 drops/min) P max. 210 bar (3.045 psi)
Standard seals:	O-ring NBR Seals PTFE
Cavity:	SCN1020
Installation torque:	40 Nm
Coil nut torque:	2 Nm
Max contamination level:	NAS 8 ISO 4406 19/17/14
Fluid temperature range:	From -20 °C to +80 °C
Seal kit std.:	5AG0025

ELECTRIC

Type of feeding:	PWM constant current
Insulation index:	H
Hysteresis:	+/- 5 %
Max current 12 Vcc:	1800 mA
Max current 24 Vcc:	900 mA
PWM:*	100 Hz
Coil code: *(see page 9.02.002)*	S190-26S

**Note:* For temperature or special conditions contact our sales department.

Pressure drop

Oil viscosity: 46 cSt (217 SSU) Fluid temperature: 40 °C

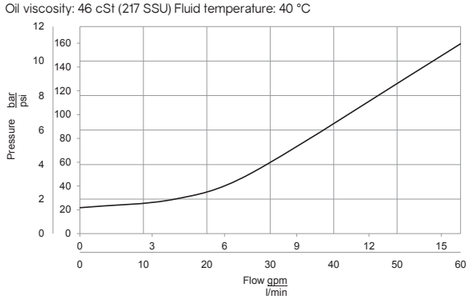

Performance graph

Oil viscosity: 46 cSt (217 SSU) Fluid temperature: 40 °C
At imput flow 60 l/min (15,8 gpm)

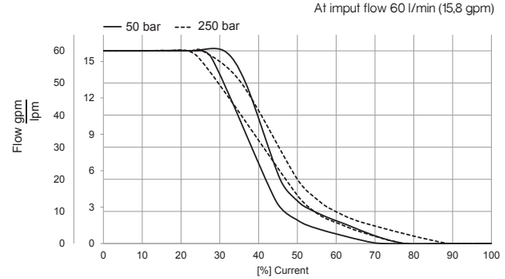

E10P-21

Inches
Millimeters

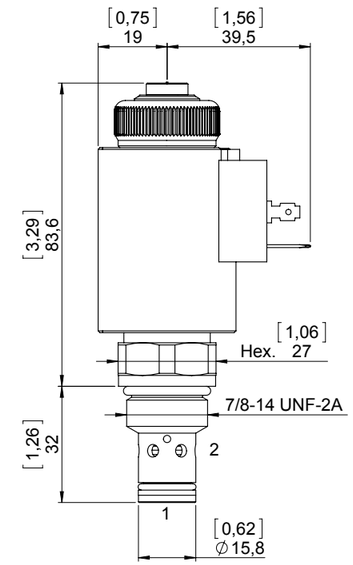

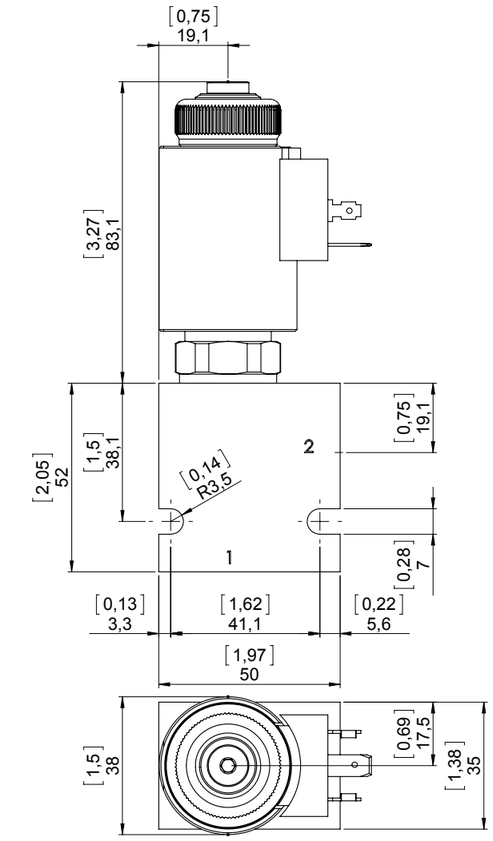

STANDARD HOUSING

Ordering code:	See page 9.03.001
Material:*	Aluminium/Steel Max working pressure for aluminum body: 210 bar Max working pressure for steel body: 350 bar

**Note:* To correctly select the material, in relation to application, see page S.003.

Ordering code

E10P-21 - - -

Seals
- None (std. NBR+PTFE)
- **Y**- Polyurethane
- For other options contact Sales dept.

*Options**
- None (std. without override)
- **P**- Push
- **SV**- Screw in

Connector
- **DN**- Din
- **DU**- Deutsch
- **AM**- Amp Junior

Voltage
- None (std. without coil)
- **12**- Vdc
- **24**- Vdc

Material std. housing
- **A**- Aluminium
- **S**- Steel

Housing size ports
- None (std. only cartridge)
- **3B**- 3/8" BSP
- **4B**- 1/2" BSP
- **3S**- SAE 8
- **4S**- SAE 10

**Note:* Information about manual override is available at page S.001

E12P-20

Electro proportional valve 2 ways 2 positions, poppet pilot operated, normally closed

Description

Electro proportional cartridge valve 2 ways 2 positions poppet type normally closed, for locking flow direction or load-holding applications.

Operation mode

When the coil is de-energized, the valve works as a check valve, allowing flow from 1 to 2, while blocking flow from 2 to 1.
When energized, the cartridge's poppet lifts allowing flow from port 2 to 1. Flow is proportional to current applied to the coil. Flow output at port 1 may change based on working pressure.

GENERAL DATA

Weight without coil: 0,32 Kg (0,7 lbs).
Ambient temperature range: -30 °C a 60 °C with seals standard (NBR).
Max proof pressure: 350 bar (5.075 psi).
Flow Max: 90 l/min (23,7 gpm).
Cartridge materials: high strength steel, internal parts hardened and grinding.

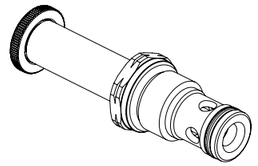

Drawing

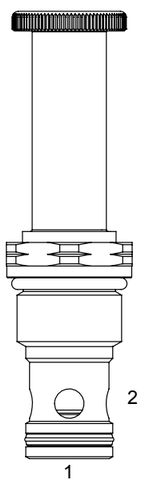

Hydraulic symbol

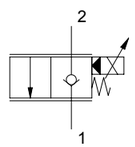

TECHNICAL DATA

HYDRAULIC

Max. working pressure:	300 bar (4.350 psi)
Flow rate:	See performance graph
Fluid: *Viscosity:*	Mineral based oil From 15cSt to 250 cSt
Leakage:	0,25 cc/min (5 drops/min) P max. 210 bar (3.045 psi)
Standard seals:	O-ring NBR Seals Polyurethane
Cavity:	SCN1220
Installation torque:	50 Nm
Coil nut torque:	2 Nm
Max contamination level:	NAS 8 ISO 4406 19/17/14
Fluid temperature range:	From -20 °C to +80 °C
Seal kit std.:	5AG0028

ELECTRIC

Type of feeding:	PWM constant current
Insulation index:	H
Hysteresis:	+/- 5 %
Max current 12 Vcc:	1800 mA
Max current 24 Vcc:	900 mA
PWM:*	100 Hz
Coil code: *(see page 9.02.002)*	S190-26S

**Note:* For temperature or special conditions contact our sales department.

Pressure drop

Oil viscosity: 46 cSt (217 SSU) Fluid temperature: 40 °C

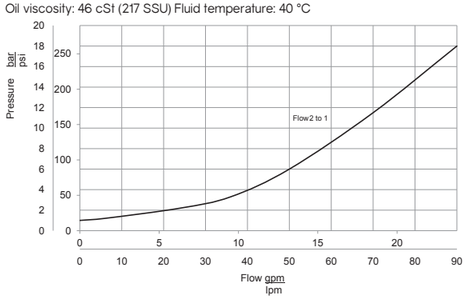

Performance graph

Oil viscosity: 46 cSt (217 SSU) Fluid temperature: 40 °C

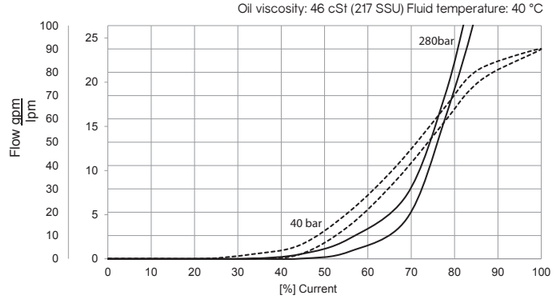

E12P-20

Inches
Millimeters

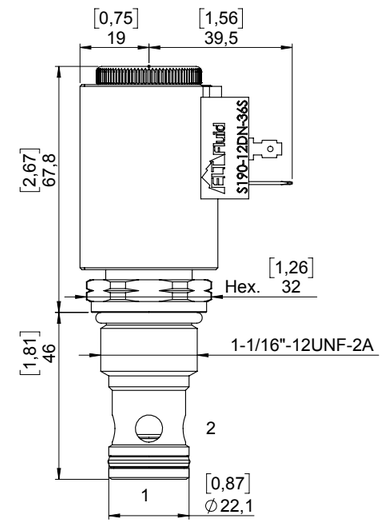

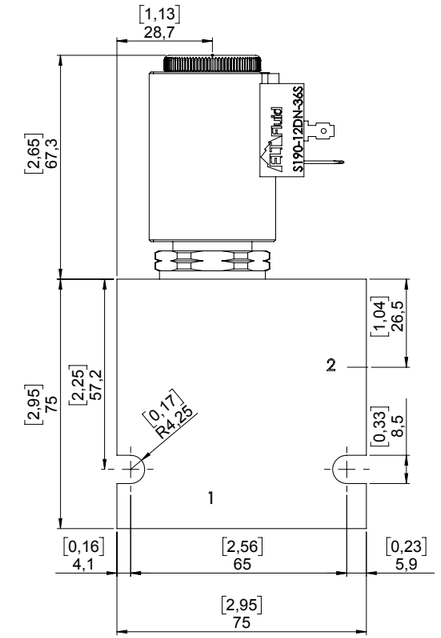

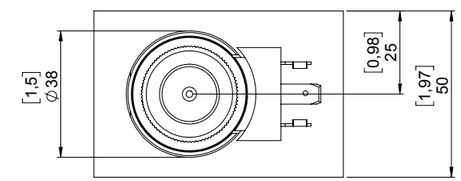

STANDARD HOUSING

Ordering code:	See page 9.04.001
Material:*	Aluminium/Steel Max working pressure for aluminum body: 210 bar Max working pressure for steel body: 350 bar

**Note:* To correctly select the material, in relation to application, see page S.003.

Ordering code

E12P-20 - -

Seals
- None (std. NBR+PTFE)
- **Y**- Polyurethane
- For other options contact Sales dept.

*Options**
- None (std. without override)
- **S**- Screw out

Connector
- **DN**- Din
- **DU**- Deutsch
- **AM**- Amp Junior

Voltage
- None (std. without coil)
- **12**- Vdc
- **24**- Vdc

Material std. housing
- **A**- Aluminium
- **S**- Steel

Housing size ports
- None (std. only cartridge)
- **4B**- 1/2" BSP
- **5B**- 3/4" BSP
- **4S**- SAE 10
- **5S**- SAE 12

**Note:* Information about manual override is available at page S.001

E12P-21

Electro proportional valve 2 ways 2 positions, poppet pilot operated, normally open

Description

Electro proportional cartridge valve 2 ways 2 positions poppet type normally open, for locking flow direction or load-holding applications.

Operation mode

When the coil is de-energized, the valve allow flow from 2 to 1.
When the valve is partially energized, the valve begins to throttle the flow from 2 to 1. When fully energized, the poppet block the flow from 2 to 1.

GENERAL DATA

Weight without coil: 0,35 Kg (0,77 lbs).
Ambient temperature range: -30 C° a 60 °C with seals standard (NBR).
Max proof pressure: 300 bar (4.350 psi).
Flow Max: 90 l/min (23,7 gpm).
Cartridge materials: high strength steel, internal parts hardened and grinding.

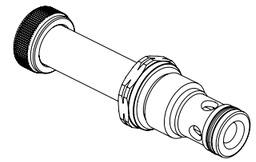

Drawing

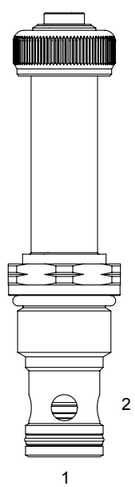

Hydraulic symbol

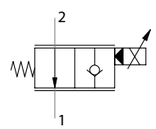

TECHNICAL DATA

HYDRAULIC	
Max. working pressure:	210 bar (3.045 psi)
Flow rate:	See performance graph
Fluid: *Viscosity:*	Mineral based oil From 15cSt to 250 cSt
Leakage:	0,25 cc/min (5 drops/min) P max. 210 bar (3.045 psi)
Standard seals:	O-ring NBR Seals Polyurethane
Cavity:	SCN1220
Installation torque:	50 Nm
Coil nut torque:	2 Nm
Max contamination level:	NAS 8 ISO 4406 19/17/14
Fluid temperature range:	From -20 °C to +80 °C
Seal kit std.:	5AG0028
ELECTRIC	
Type of feeding:	PWM constant current
Insulation index:	H
Hysteresis:	+/- 5 %
Max current 12 Vcc:	1800 mA
Max current 24 Vcc:	900 mA
PWM:*	100 Hz
Coil code: *(see page 9.02.002)*	S190-26S

**Note:* For temperature or special conditions contact our sales department.

Pressure drop

Oil viscosity: 46 cSt (217 SSU) Fluid temperature: 40 °C

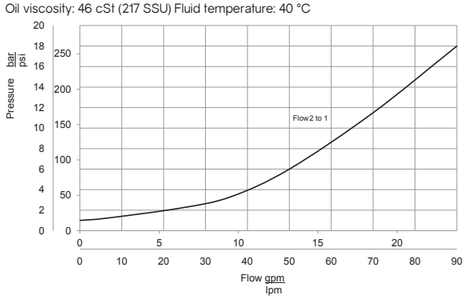

Performance graph

Oil viscosity: 46 cSt (217 SSU) Fluid temperature: 40 °C
At imput flow 90 l/min (23,7 gpm)

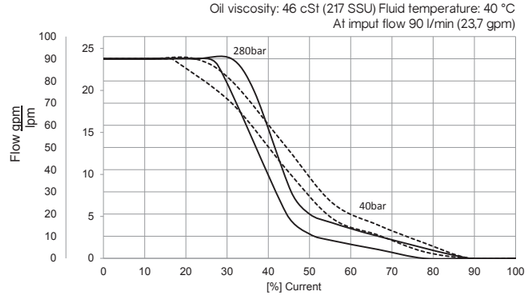

E12P-21

Inches
Millimeters

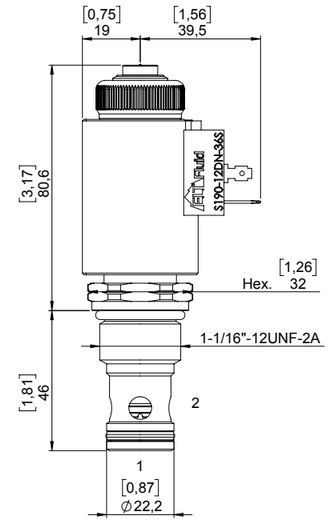

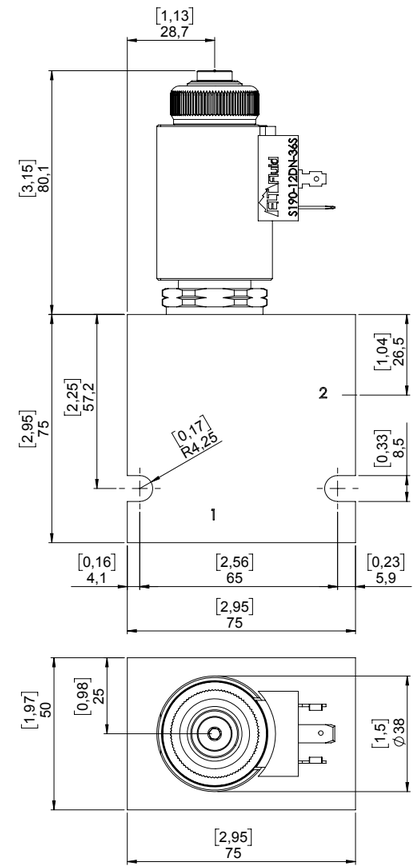

STANDARD HOUSING

Ordering code:	See page 9.04.001
Material:*	Aluminium/Steel Max working pressure for aluminum body: 210 bar Max working pressure for steel body: 350 bar

**Note:* To correctly select the material, in relation to application, see page S.003.

Ordering code

E12P-21 - -

Seals
- None (std. NBR+PTFE)
- **Y**- Polyurethane
- For other options contact Sales dept.

*Options**
- None (std. without override)
- **S**- Screw out
- **P**- Push
- **SV**- Screw in

Connector
- **DN**- Din
- **DU**- Deutsch
- **AM**- Amp Junior

Voltage
- None (std. without coil)
- **12**- Vdc
- **24**- Vdc

Material std. housing
- **A**- Aluminium
- **S**- Steel

Housing size ports
- None (std. only cartridge)
- **4B**- 1/2" BSP
- **5B**- 3/4" BSP
- **4S**- SAE 10
- **5S**- SAE 12

**Note:* Information about manual override is available at page S.001

E16P-20

Electro proportional valve 2 way 2 positions, poppet pilot operated, normally closed

Description

Electro proportional cartridge valve 2 way 2 positions poppet type normally closed, for locking flow direction or load-holding applications.

Operation mode

When the coil is de-energized, the valve works as a check valve, allowing flow from 1 to 2, while blocking flow from 2 to 1.
When energized, the cartridge's poppet lifts allowing flow from port 2 to 1. Flow is proportional to current applied to the coil. Flow output at port 1 may change based on working pressure.

GENERAL DATA

Weight without coil: 0,47 Kg (1,03 lbs).
Ambient temperature range: -30 °C a 60 °C with seals standard (NBR).
Max proof pressure: 350 bar (5.075 psi).
Flow Max: 90 l/min (23,7 gpm).
Cartridge materials: high strength steel, internal parts hardened and grinding.

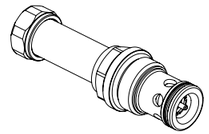

Drawing

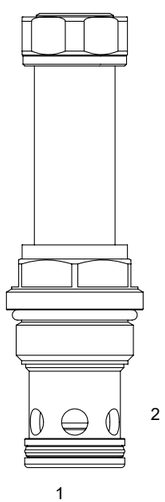

Hydraulic symbol

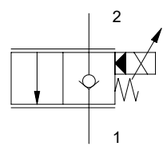

TECHNICAL DATA

HYDRAULIC

Max. working pressure:	300 bar (4.350 psi)
Flow rate:	See performance graph
Fluid: *Viscosity:*	Mineral based oil From 15cSt to 250 cSt
Leakage:	0,25 cc/min (5 drops/min) P max. 210 bar (3.045 psi)
Standard seals:	O-ring NBR Seals Polyurethane
Cavity:	SCN1620
Installation torque:	50 Nm
Coil nut torque:	2 Nm
Max contamination level:	NAS 8 ISO 4406 19/17/14
Fluid temperature range:	From -20 °C to +80 °C
Seal kit std.:	5AG0029

ELECTRIC

Type of feeding:	PWM constant current
Insulation index:	H
Hysteresis:	+/- 5 %
Max current 12 Vcc:	1800 mA
Max current 24 Vcc:	900 mA
PWM:*	100 Hz
Coil code: *(see page 9.02.002)*	S230-28S

**Note:* For temperature or special conditions contact our sales department.

Pressure drop

Oil viscosity: 46 cSt (217 SSU) Fluid temperature: 40 °C

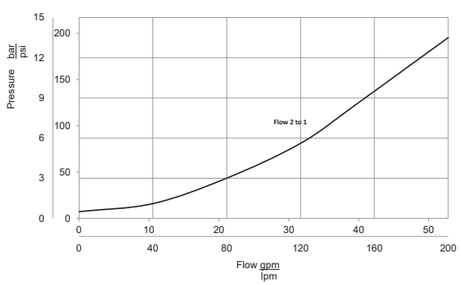

Performance graph

Oil viscosity: 46 cSt (217 SSU) Fluid temperature: 40 °C

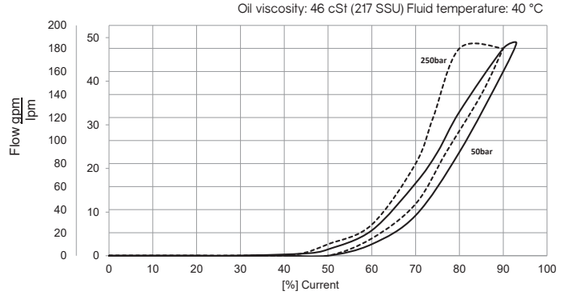

E16P-20

Inches
Millimeters

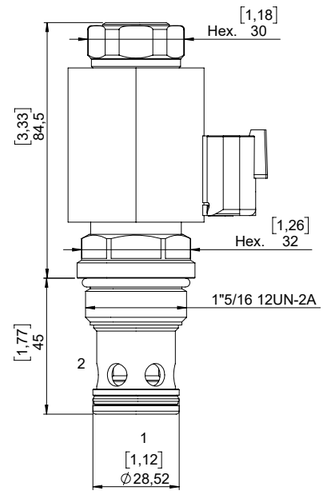

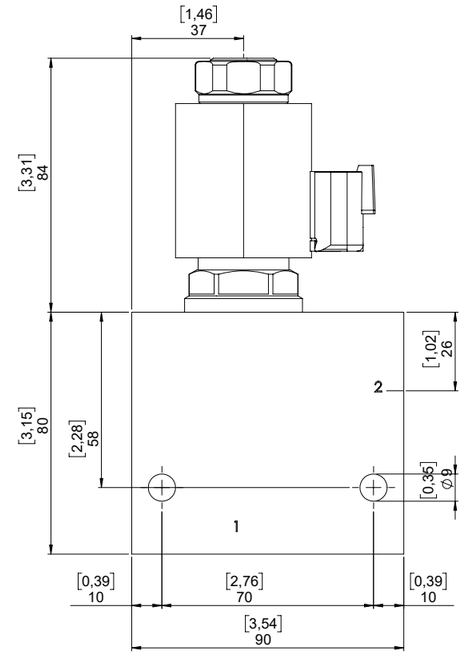

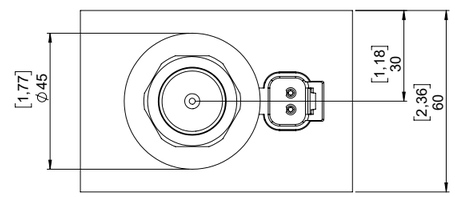

STANDARD HOUSING

Ordering code:	See page 9.05.001
Material:*	Aluminium/Steel Max working pressure for aluminum body: 210 bar Max working pressure for steel body: 350 bar

**Note:* To correctly select the material, in relation to application, see page S.003.

Ordering code

E16P-20 - -

Seals
- None (std. NBR+PTFE)
- **Y**- Polyurethane
- For other options contact Sales dept.

*Options**
- None (std. without override)
- **S**- Screw out

Connector
- **DN**- Din
- **DU**- Deutsch
- **AM**- Amp Junior

Voltage
- None (std. without coil)
- **12**- Vdc
- **24**- Vdc

Material std. housing
- **A**- Aluminium
- **S**- Steel

Housing size ports
- None (std. only cartridge)
- **4B**- 1/2" BSP
- **5B**- 3/4" BSP
- **4S**- SAE 10
- **5S**- SAE 12

**Note:* Information about manual override is available at page S.001

E08P-2S0

Electro proportional valve 2 ways 2 positions, direct acting, spool type, normally closed

Description

Electro proportional cartridge valve 2 ways 2 positions spool type normally closed, for locking flow direction. The valve is designed to control flow, with 11 bar pressure difference between port 2 and 1, in combination with a pressure compensator.

Operation mode

When the coil is de-energized, the valve is blocking flow in both direction. When the coil is energized, with current (PWM 120 Hz), the spool is displaced proportionally to the current amount allowing flow from port 2 to 1.

GENERAL DATA

Weight without coil: 0,13 Kg (0,28 lbs).
Ambient temperature range: -30 °C a 60 °C with standard seals (NBR).
Max. proof pressure: 300 bar (4.350 psi).
Flow Max: 12 l/min (3,20 gpm).
Cartridge materials: high strength steel, internal parts hardened and grinding.

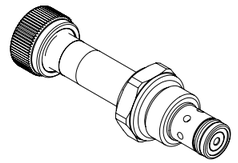

Drawing

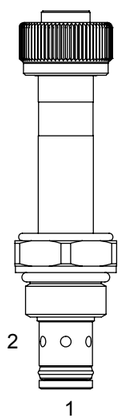

Hydraulic symbol

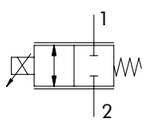

TECHNICAL DATA

HYDRAULIC	
Max. working pressure:	210 bar (3.045 psi)
Flow rate:	See performance graph
Fluid: *Viscosity:*	Mineral based oil From 15cSt to 250 cSt
Leakage:	150 cc/min P max. 210 bar (3.045 psi)
Standard seals:	O-ring NBR Seals Polyurethane
Cavity:	SCN0820
Installation torque:	27 Nm
Coil nut torque:	2 Nm
Max contamination level:	NAS 8 ISO 4406 19/17/14
Fluid temperature range:	From -20 °C to +80 °C
Seal kit std.:	5AG0046
ELECTRIC	
Type of feeding:	PWM constant current
Insulation index:	H
Hysteresis:	+/- 5 %
Max current 12 Vcc:	1500 mA
Max current 24 Vcc:	750 mA
PWM:*	120 Hz
Coil code: *(see page 9.01.003)*	S130-22S

**Note:* For temperature or special conditions contact our sales department.

Pressure drop

Regulated flow vs % current with compensator 11 bar

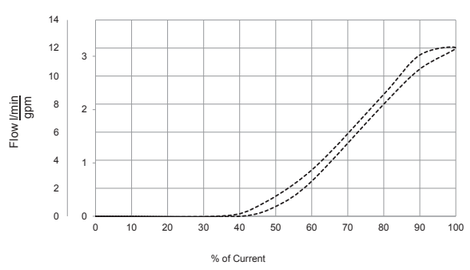

Performance graph

Oil viscosity: 46 cSt (217 SSU) Fluid temperature: 40 °C

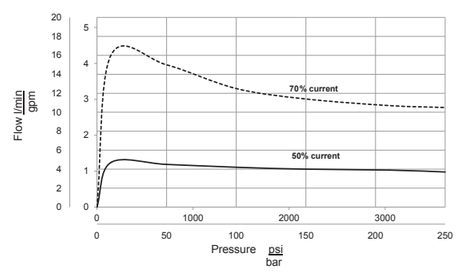

E08P-2S0

Inches
Millimeters

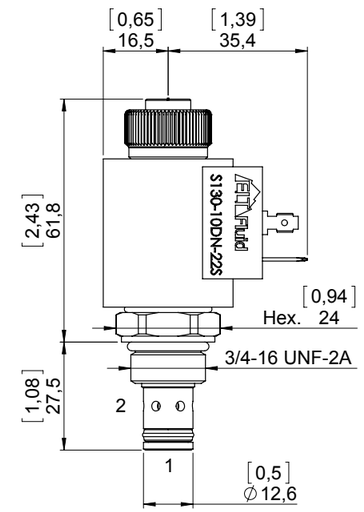

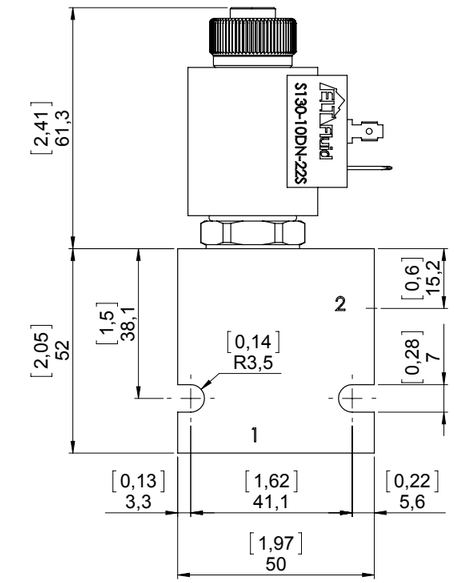

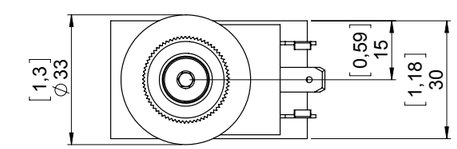

STANDARD HOUSING

Ordering code:	See page 9.02.001
Material:*	Aluminium/Steel Max working pressure for aluminum body: 210 bar Max working pressure for steel body: 350 bar

**Note:* To correctly select the material, in relation to application, see page S.003.

Ordering code

E08P-2S0 - -

Seals
- None (std. NBR+PTFE)
- **Y**- Polyurethane
- For other options contact Sales dept.

*Options**
- None (std. without override)
- **S**- Screw out
- **P**- Push

Connector
- **DN**- Din
- **DU**- Deutsch
- **AM**- Amp Junior

Voltage
- None (std. without coil)
- **12**- Vdc
- **24**- Vdc

Material std. housing
- **A**- Aluminium
- **S**- Steel

Housing size ports
- None (std. only cartridge)
- **2B**- 1/4" BSP
- **3B**- 3/8" BSP
- **2S**- SAE 6
- **3S**- SAE 8

**Note:* Information about manual override is available at page S.001

E10P-2S0

Electro proportional valve 2 ways 2 positions, direct acting, spool type, normally closed

Description

Electro proportional cartridge valve 2 ways 2 positions spool type normally closed, for locking flow direction. The valve is designed to control flow, with 11 bar pressure difference between port 2 and 1, in combination with a pressure compensator.

Operation mode

When the coil is de-energized, the valve is blocking flow in both direction. When the coil is energized, with current (PWM 120 Hz), the spool is displaced proportionally to the current amount allowing flow from port 2 to 1 snd from port 1 to 2.

GENERAL DATA

Weight without coil: 0,28 Kg (0,6 lbs).
Ambient temperature range: -30 °C a 60 °C with standard seals (NBR).
Max. proof pressure: 300 bar (4.350 psi).
Flow Max: 40 l/min (10,7 gpm).
Cartridge materials: high strength steel, internal parts hardened and grinding.

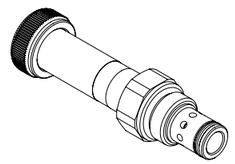

Drawing

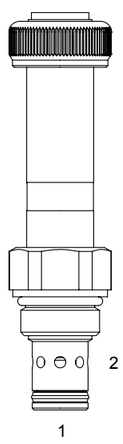

Hydraulic symbol

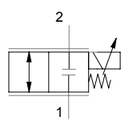

TECHNICAL DATA

HYDRAULIC

Max. working pressure:	250 bar (3.626 psi)
Flow rate:	See performance graph
Fluid: *Viscosity:*	Mineral based oil From 15cSt to 250 cSt
Leakage:	150 cc/min P max. 210 bar (3.045 psi)
Standard seals:	O-ring NBR Seals Polyurethane
Cavity:	SCN1020
Installation torque:	35 Nm
Coil nut torque:	2 Nm
Max contamination level:	NAS 8 ISO 4406 19/17/14
Fluid temperature range:	From -20 °C to +80 °C
Seal kit std.:	5AG0026

ELECTRIC

Type of voltage:	PWM constant current
Insulation index:	H
Hysteresis:	+/- 5 %
Max current 12 Vcc:	1800 mA
Max current 24 Vcc:	900 mA
PWM:*	120 Hz
Coil code: *(see page 9.02.002)*	S190-26S

**Note:* For temperature or special conditions contact our sales department.

Performance graphs

Oil viscosity: 46 cSt (217 SSU) Fluid temperature: 40 °C

Current vs Flow from 1 to 2 at 210 bar (3.045 psi) with compensator 11bar (159 psi)

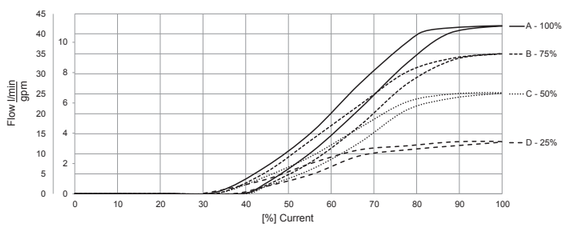

Current vs Flow from 2 to 1 at 210 bar (3.045 psi) with compensator 11bar (159 psi)

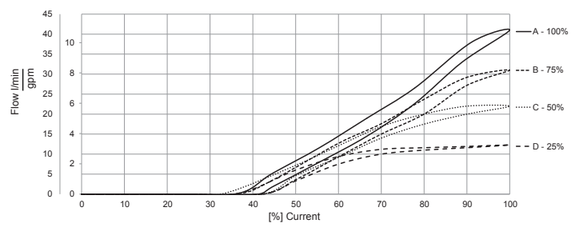

E10P-2S0

Inches
Millimeters

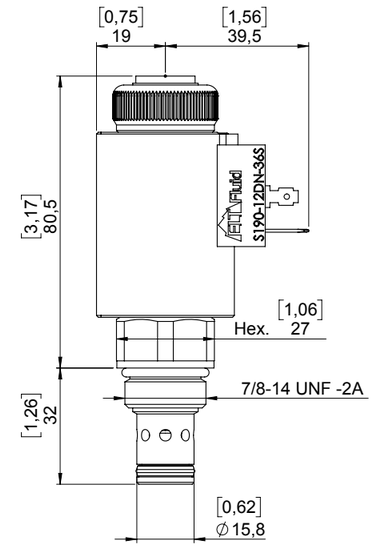

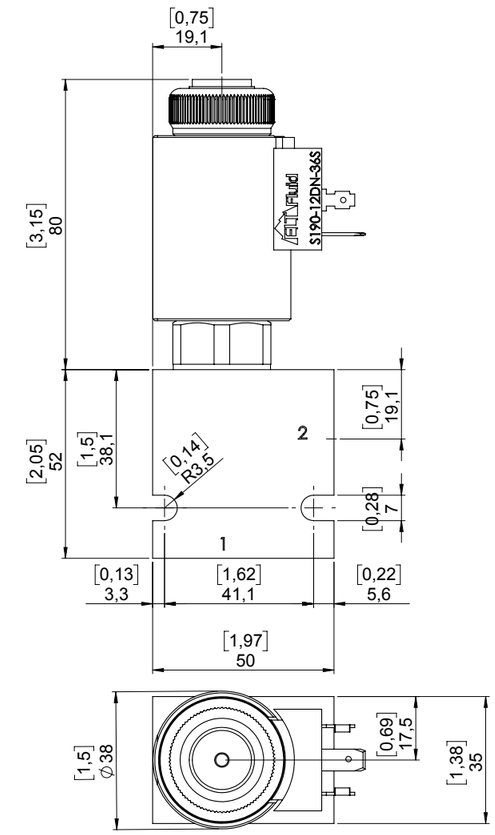

STANDARD HOUSING

Ordering code:	See page 9.03.001
Material:*	Aluminium/Steel Max working pressure for aluminum body: 210 bar Max working pressure for steel body: 350 bar

**Note:* To correctly select the material, in relation to application, see page S.003.

Ordering code

E10P-2S0 - -

% Flow Max
- **3B**- 3/8" BSP
- **4B**- 1/2" BSP
- **3S**- SAE 8
- **4S**- SAE 10

Seals
- None (std. NBR+PTFE)
- **Y**- Polyurethane
- For other options contact Sales dept.

*Options**
- None (std. without override)
- **S**- Screw out

Connector
- **DN**- Din
- **DU**- Deutsch
- **AM**- Amp Junior

Voltage
- None (std. without coil)
- **12**- Vdc
- **24**- Vdc

Material std. housing
- **A**- Aluminium
- **S**- Steel

Housing size ports
- None (std. only cartridge)
- **3B**- 3/8" BSP
- **4B**- 1/2" BSP
- **3S**- SAE 8
- **4S**- SAE 10

**Note:* Information about manual override is available at page S.001

E08P-4A

Electro proportional valve 4 ways 3 positions, direct acting, spool type

Description

Electro proportional cartridge valve spool type 4 ways 3 positions, with all ports closed in center position. The valve is designed to control flow, with 11 bar pressure difference between port 3 to 2 and 4, in combination with a pressure compensator.

Operation mode

When the coils are de-energized, all ports are closed in center position.
When the coils are energized with current (PWM 120 HZ) the spool moves proportionally to the current amount, spool opening provide progressive flow.
When S1 coil is energized, flow is allowed from 3 to 4, and from 2 to 1.
When S2 coil is energized, flow is allowed from 3 to 2, and from 4 to 1. In application where port flows are unequal due to cylinder ratios, the higher return flow should be directed to port 2.

GENERAL DATA

Weight without coil: 0,19 Kg (0,42 lbs).
Ambient temperature range: -30 °C a 60 °C with standard seals (NBR).
Max proof pressure: 300 bar (4.350 bar).
Max. pressure in port 1: 50 bar (725 psi).
Flow Max: 12 l/min (3,2 gpm).
Cartridge materials: high strength steel, internal parts hardened and grinding.

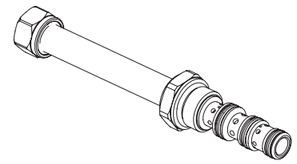

Drawing

Hydraulic symbol

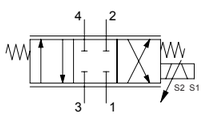

TECHNICAL DATA

HYDRAULIC

Max. working pressure:	210 bar (3.045 psi)
Flow rate:	See performance graph
Fluid: *Viscosity:*	Mineral based oil From 15cSt to 250 cSt
Leakage:	150 cc/min P max. 210 bar (3.045 psi)
Standard seals:	O-ring NBR Seals Polyurethane
Cavity:	SCN0840
Installation torque:	27 Nm
Coil nut torque:	2 Nm
Max contamination level:	NAS 8 ISO 4406 19/17/14
Fluid temperature range:	From -20 °C to +80 °C
Seal kit std.:	5AG0043

ELECTRIC

Type of feeding:	PWM constant current
Insulation index:	H
Hysteresis:	+/- 5 %
Max current 12 Vcc:	1500 mA
Max current 24 Vcc:	750 mA
PWM:*	120 Hz
Coil code: *(see page 9.01.003)*	S130-22S

**Note:* For temperature or special conditions contact our sales department.

Pressure drop

Oil viscosity: 46 cSt (217 SSU) Fluid temperature: 40 °C

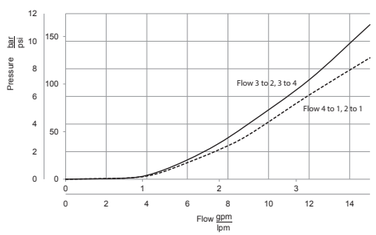

Compensation

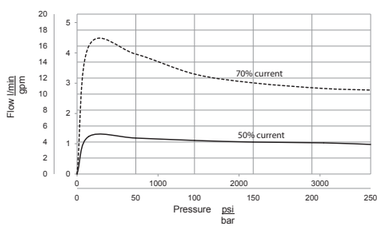

Performance graph

Oil viscosity: 46 cSt (217 SSU) Fluid temperature: 40 °C
Regulater Flow vs. % Current with compensator 11 bar

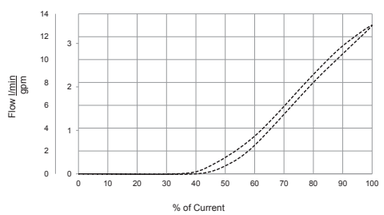

E08P-4A

Inches
Millimeters

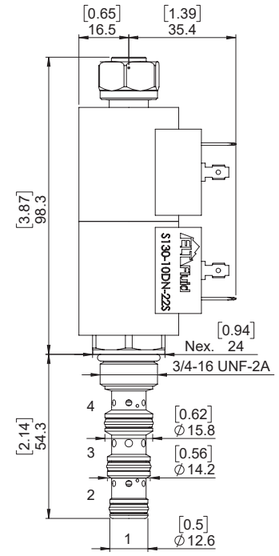

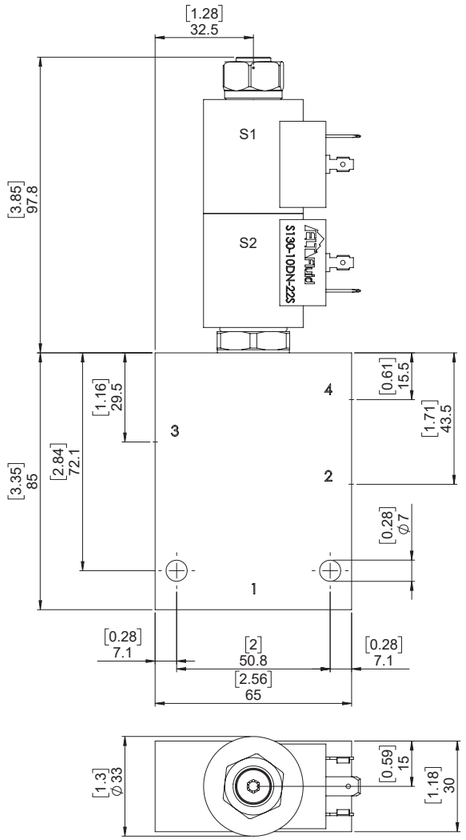

STANDARD HOUSING

Ordering code:	See page 9.02.005
Material:*	Aluminium/Steel Max working pressure for aluminum body: 210 bar Max working pressure for steel body: 350 bar

**Note:* To correctly select the material, in relation to application, see page S.003.

Ordering code

E08P-4A - -

Seals
- None (std. NBR+PTFE)
- **Y**- Polyurethane
- For other options contact Sales dept.

*Options**
- None (std. without override)
- **S**- Screw out
- **PP**- Push pull
- **L**- Lever

Connector
- **DN**- Din
- **DU**- Deutsch
- **AM**- Amp Junior

Voltage
- None (std. without coil)
- **12**- Vdc
- **24**- Vdc

Material std. housing
- **A**- Aluminium
- **S**- Steel

Housing size ports
- None (std. only cartridge)
- **2B**- 1/4" BSP
- **3B**- 3/8" BSP
- **2S**- SAE 6
- **3S**- SAE 8

**Note:* Information about manual override is available at page S.001

E08P-4B

Electro proportional valve 4 ways 3 positions, direct acting, spool type

Description

Electro proportional cartridge valve spool type 4 ways 3 positions, motor spool in center position. The valve is designed to control flow, with 11 bar pressure difference between port 3 to 2 and 4, in combination with a pressure compensator.

Operation mode

When the coils are de-energized, port 3 is closed while flow is allowed from 2 to 1, and from 4 to 1 .
When the coils are energized with current (PWM 120 HZ) the spool moves proportionally to the current amount, spool opening provides progressive flow. When S1 coil is energized, flow is allowed from 3 to 4, and from 2 to 1. When S2 coil is energized, flow is allowed from 3 to 2, and from 4 to 1.
In application where port flows are unequal due to cylinder ratios, the higher return flow should be directed to port 2.

GENERAL DATA

Weight without coil: 0,19 Kg (0,42 lbs).
Ambient temperature range: -30 °C a 60 °C with standard seals (NBR).
Max proof pressure: 300 bar (4.350 bar).
Max. pressure in port 1: 50 bar (725 psi).
Flow Max: 12 l/min (3,20 gpm).
Cartridge materials: high strength steel, internal parts hardened and grinding.

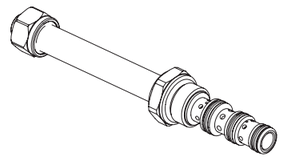

Drawing

Hydraulic symbol

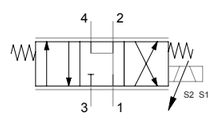

TECHNICAL DATA

HYDRAULIC

Max. working pressure:	210 bar (3.045 psi)
Flow rate:	See performance graph
Fluid: *Viscosity:*	Mineral based oil From 15cSt to 250 cSt
Leakage:	150 cc/min P max. 210 bar (3.045 psi)
Standard seals:	O-ring NBR Seals Polyurethane
Cavity:	SCN0840
Installation torque:	27 Nm
Coil nut torque:	2 Nm
Max contamination level:	NAS 8 ISO 4406 19/17/14
Fluid temperature range:	From -20 °C to +80 °C
Seal kit std.:	5AG0043

ELECTRIC

Type of feeding:	PWM constant current
Insulation index:	H
Hysteresis:	+/- 5 %
Max current 12 Vcc:	1500 mA
Max current 24 Vcc:	750 mA
PWM:*	120 Hz
Coil code: *(see page 9.01.003)*	S130-22S

**Note:* For temperature or special conditions contact our sales department.

Pressure drop

Oil viscosity: 46 cSt (217 SSU) Fluid temperature: 40 °C

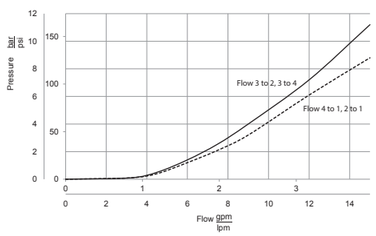

Compensation

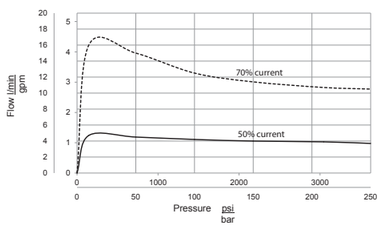

Performance graph

Oil viscosity: 46 cSt (217 SSU) Fluid temperature: 40 °C
Regulater Flow vs. % Current with compensator 11 bar

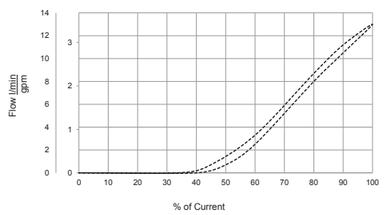

E08P-4B

Inches
Millimeters

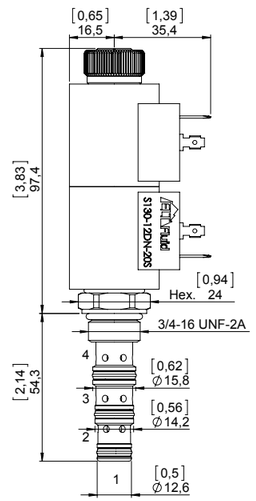

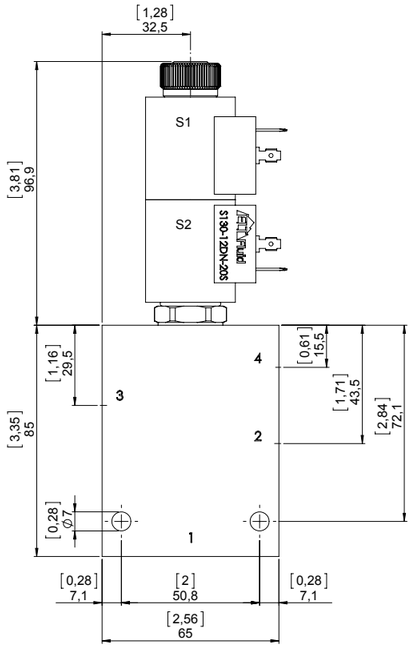

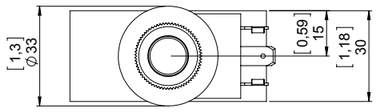

STANDARD HOUSING

Ordering code:	See page 9.02.005
Material:*	Aluminium/Steel Max working pressure for aluminum body: 210 bar Max working pressure for steel body: 350 bar

**Note:* To correctly select the material, in relation to application, see page S.003.

Ordering code

E08P-4B - -

Seals
- None (std. NBR+PTFE)
- **Y**- Polyurethane
- For other options contact Sales dept.

*Options**
- None (std. without override)
- **S**- Screw out
- **PP**- Push pull
- **L**- Lever

Connector
- **DN**- Din
- **DU**- Deutsch
- **AM**- Amp Junior

Voltage
- None (std. without coil)
- **12**- Vdc
- **24**- Vdc

Material std. housing
- **A**- Aluminium
- **S**- Steel

Housing size ports
- None (std. only cartridge)
- **2B**- 1/4" BSP
- **3B**- 3/8" BSP
- **2S**- SAE 6
- **3S**- SAE 8

**Note:* Information about manual override is available at page S.001

E10P-4A

Electro proportional valve 4 ways 3 positions, direct acting, spool type

Description

Electro proportional cartridge valve spool type 4 ways 3 positions, with all ports closed in center position. The valve is designed to control flow, with 11 bar pressure difference between port 3 to 2 and 4, in combination with a pressure compensator.

Operation mode

When the coils are de-energized, all ports are closed in center position. When the coils are energized with current (PWM 120 HZ) the spool moves proportionally to the current amount, spool opening provide progressive flow. When S1 coil is energized, flow is allowed from 3 to 4, and from 2 to 1.

When S2 coil is energized, flow is allowed from 3 to 2, and from 4 to 1. In application where port flows are unequal due to cylinder ratios, the higher return flow should be directed to port 2.

GENERAL DATA

Weight without coil: 0,35 Kg (0,77 lbs).
Ambient temperature range: -30 °C a 60 °C with standard seals (NBR).
Max proof pressure: 300 bar (4.350 bar).
Max. pressure in port 1: 50 bar (725 psi).
Flow Max: 20 l/min (5,3 gpm).
Cartridge materials: high strength steel, internal parts hardened and grinding.

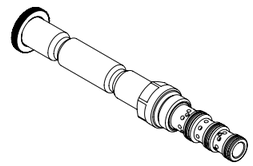

Drawing

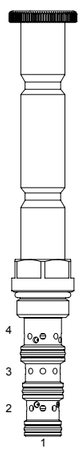

Hydraulic symbol

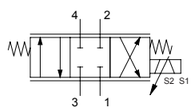

TECHNICAL DATA

HYDRAULIC

Max. working pressure:	210 bar (5.075 psi)
Flow rate:	See performance graph
Fluid: *Viscosity:*	Mineral based oil From 15cSt to 250 cSt
Leakage:	150 cc/min P max. 210 bar (3.045 psi)
Standard seals:	O-ring NBR Seals Polyurethane
Cavity:	SCN1040
Installation torque:	33 Nm
Coil nut torque:	2 Nm
Max contamination level:	NAS 8 ISO 4406 19/17/14
Fluid temperature range:	From -20 °C to +80 °C
Seal kit std.:	5AG0044

ELECTRIC

Type of feeding:	PWM constant current
Insulation index:	H
Hysteresis:	+/- 5 %
Max current 12 Vcc:	1800 mA
Max current 24 Vcc:	900 mA
PWM:*	120 Hz
Coil code: *(see page 9.02.002)*	S190-26S

**Note:* For temperature or special conditions contact our sales department.

Pressure drop

Oil viscosity: 46 cSt (217 SSU) Fluid temperature: 40 °C

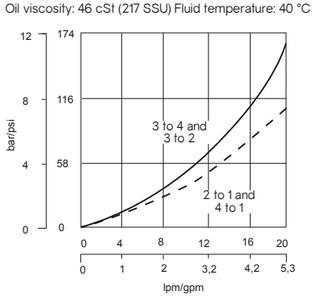

Compensation

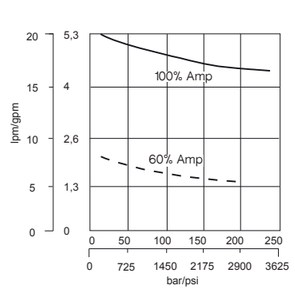

Performance graph

Oil viscosity: 46 cSt (217 SSU) Fluid temperature: 40 °C
Regulater Flow vs. % Current with compensator 11 bar

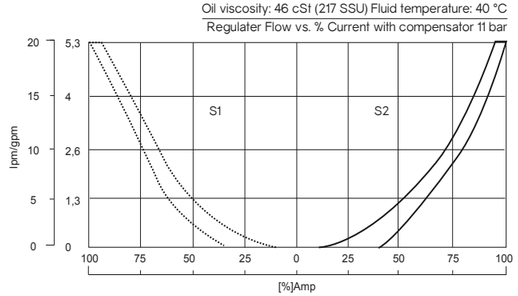

E10P-4A

Inches
Millimeters

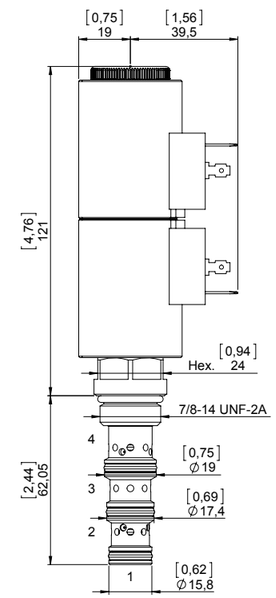

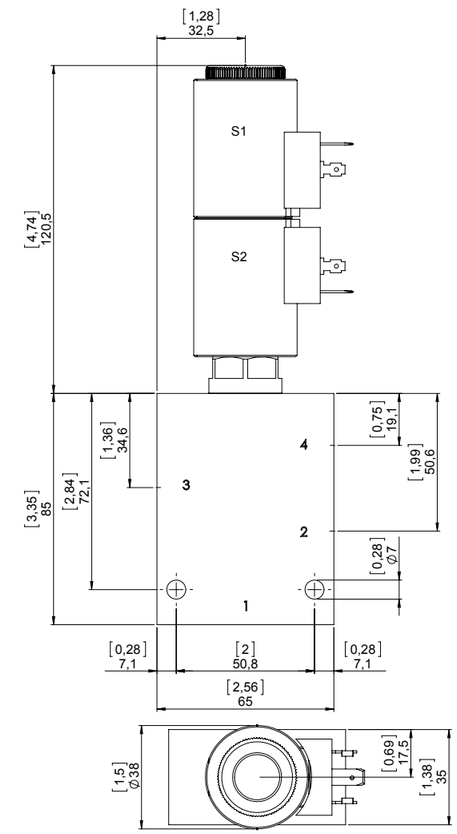

STANDARD HOUSING

Ordering code:	See page 9.03.005
Material:*	Aluminium/Steel Max working pressure for aluminum body: 210 bar Max working pressure for steel body: 350 bar

**Note:* To correctly select the material, in relation to application, see page S.003.

Ordering code

E10P-4A - -

Seals
- None (std. NBR+PTFE)
- **Y**- Polyurethane
- For other options contact Sales dept.

*Options**
- None (std. without override)
- **PP**- Push pull
- **L** - Lever

Connector
- **DN**- Din
- **DU**- Deutsch
- **AM**- Amp Junior

Voltage
- None (std. without coil)
- **12**- Vdc
- **24**- Vdc

Material std. housing
- **A**- Aluminium
- **S**- Steel

Housing size ports
- None (std. only cartridge)
- **3B**- 3/8" BSP
- **4B**- 1/2" BSP
- **3S**- SAE 8
- **4S**- SAE 10

**Note:* Information about manual override is available at page S.001

E10P-4B

Electro proportional valve 4 ways 3 positions, direct acting, spool type

Description

Electro proportional cartridge valve spool type 4 ways 3 positions, motor spool in center position. The valve is designed to control flow, with 11 bar pressure difference between port 3 to 2 and 4, in combination with a pressure compensator.

Operation mode

When the coils are de-energized, port 3 is closed while flow is allowed from 2 to 1, and from 4 to 1 . When the coils are energized with current (PWM 120 HZ) the spool moves proportionally to the current amount, spool opening provides progressive flow. When S1 coil is energized, flow is allowed from 3 to 4, and from 2 to 1.
When S2 coil is energized, flow is allowed from 3 to 2, and from 4 to 1. In application where port flows are unequal due to cylinder ratios, the higher return flow should be directed to port 2.

GENERAL DATA

Weight without coil: 0,35 Kg (0,77 lbs).
Ambient temperature range: -30 °C a 60 °C with standard seals (NBR).
Max proof pressure: 300 bar (4.350 bar).
Max. pressure in port 1: 50 bar (725 psi).
Flow Max: 20 l/min (5,3 gpm).
Cartridge materials: high strength steel, internal parts hardened and grinding.

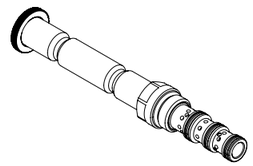

TECHNICAL DATA

HYDRAULIC	
Max. working pressure:	210 bar (5.075 psi)
Flow rate:	See performance graph
Fluid: *Viscosity:*	Mineral based oil From 15cSt to 250 cSt
Leakage:	150 cc/min P max. 210 bar (3.045 psi)
Standard seals:	O-ring NBR Seals Polyurethane
Cavity:	SCN1040
Installation torque:	33 Nm
Coil nut torque:	2 Nm
Max contamination level:	NAS 8 ISO 4406 19/17/14
Fluid temperature range:	From -20 °C to +80 °C
Seal kit std.:	5AG0044
ELECTRIC	
Type of feeding:	PWM constant current
Insulation index:	H
Hysteresis:	+/- 5 %
Max current 12 Vcc:	1800 mA
Max current 24 Vcc:	900 mA
PWM:*	120 Hz
Coil code: *(see page 9.02.002)*	S190-26S

**Note:* For temperature or special conditions contact our sales department.

Drawing

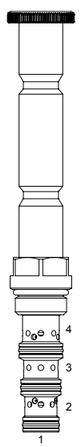

Hydraulic symbol

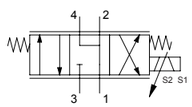

Pressure drop

Oil viscosity: 46 cSt (217 SSU) Fluid temperature: 40 °C

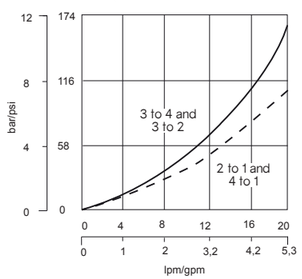

Compensation

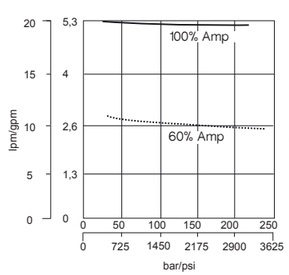

Performance graph

Oil viscosity: 46 cSt (217 SSU) Fluid temperature: 40 °C
Regulater Flow vs. % Current with compensator 11 bar

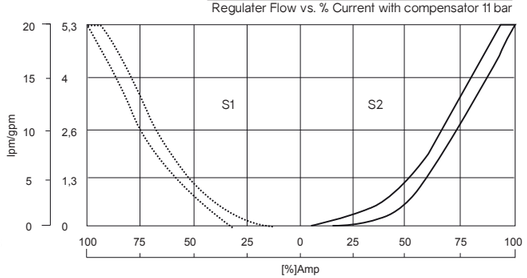

E10P-4B

Inches
Millimeters

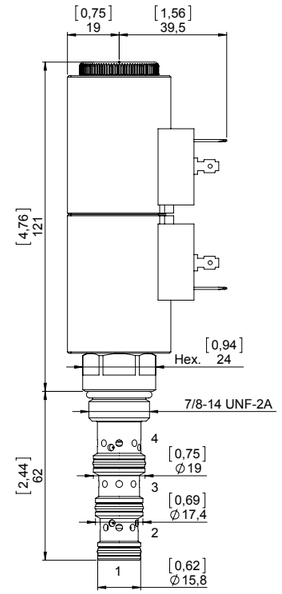

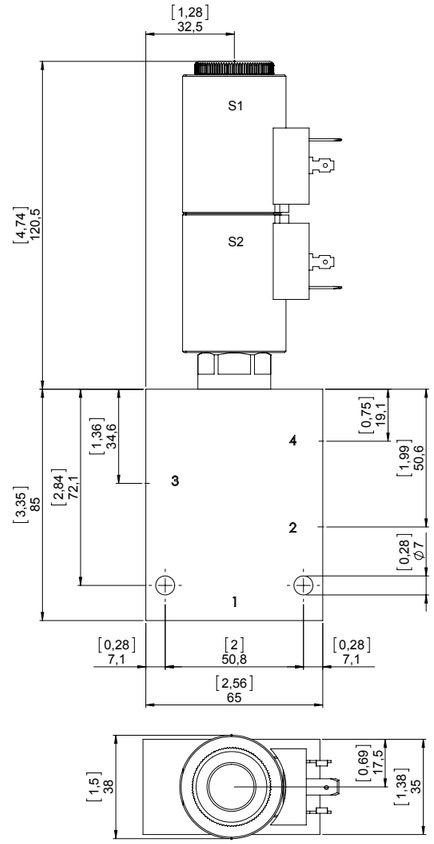

STANDARD HOUSING

Ordering code:	See page 9.03.005
Material:*	Aluminium/Steel Max working pressure for aluminum body: 210 bar Max working pressure for steel body: 350 bar

**Note:* To correctly select the material, in relation to application, see page S.003.

Ordering code

E10P-4B - -

Seals
- None (std. NBR+PTFE)
- **Y**- Polyurethane
- For other options contact Sales dept.

*Options**
- None (std. without override)
- **PP**- Push pull
- **L** - Lever

Connector
- **DN**- Din
- **DU**- Deutsch
- **AM**- Amp Junior

Voltage
- None (std. without coil)
- **12**- Vdc
- **24**- Vdc

Material std. housing
- **A**- Aluminium
- **S**- Steel

Housing size ports
- None (std. only cartridge)
- **3B**- 3/8" BSP
- **4B**- 1/2" BSP
- **3S**- SAE 8
- **4S**- SAE 10

**Note:* Information about manual override is available at page S.001

PE08MP-20

Electro proportional relief valve, direct acting, poppet type, increasing pressure with increasing current

Description

Pressure relief valve direct acting, poppet-type, which can be adjusted across a prescribed range using a variable electric input. Designed for application where pressure adjustment and low leakage is requested.

Operation mode

The valve does not allow flow from 1 to 2 until enough pressure on port 1 will offset the electric forced induced by the coil allowing flow from port 1 to port 2.
In case of no current applied to the coil the valve allows flow from port 1 to 2.

GENERAL DATA

Weight without coil: 0,19 Kg (0,41 lbs).
Ambient temperature range: -30 °C a 60 °C with standard seals (NBR).
Max. proof pressure: 350 bar (5.075 psi) 50 bar (725 psi) in port 2.
Flow Max: 2 l/min (0,5 gpm).
Cartridge materials: high strength steel, internal parts hardened and grinding.

Drawing

Hydraulic symbol

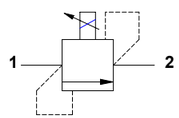

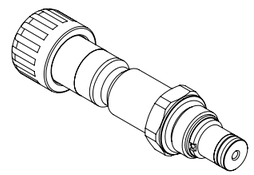

TECHNICAL DATA

HYDRAULIC	
Max. working pressure:	350 bar (5.075 psi)
Max flow :	2 l/min
Fluid: *Viscosity:*	Mineral based oil From 15cSt to 250 cSt
Leakage:	1 cc/min P max. 350 bar (5.075 psi)
Standard seals:	O-ring NBR Back up ring PTFE
Cavity:	SCN0820
Installation torque:	27 Nm
Coil nut torque:	2 Nm
Max contamination level:	NAS 8 ISO 4406 19/17/14
Fluid temperature range:	From -20 °C to +80 °C
Seal kit std.:	5AG0012
ELECTRIC	
Type of feeding:	PWM constant current
Insulation index:	H
Hysteresis:	+/- 5 %
Max current 12 Vcc:	1800 mA
Max current 24 Vcc:	900 mA
PWM:*	200 Hz
Coil code: *(see page 9.02.002)*	S190-26S

**Note:* For temperature or special conditions contact our sales department.

Performance graph

Oil viscosity: 46 cSt (217 SSU) Fluid temperature: 40 °C
At imput flow 12 l/min (0,31 gpm)

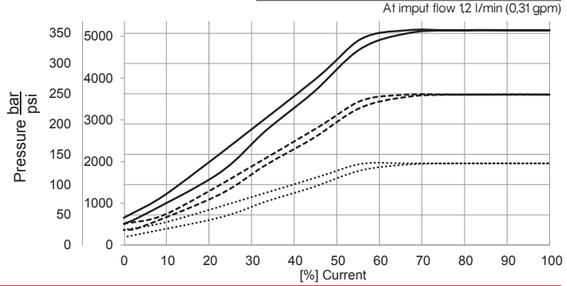

PE08MP-20

Inches
Millimeters

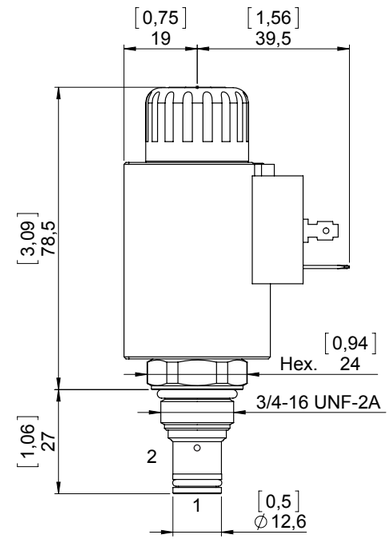

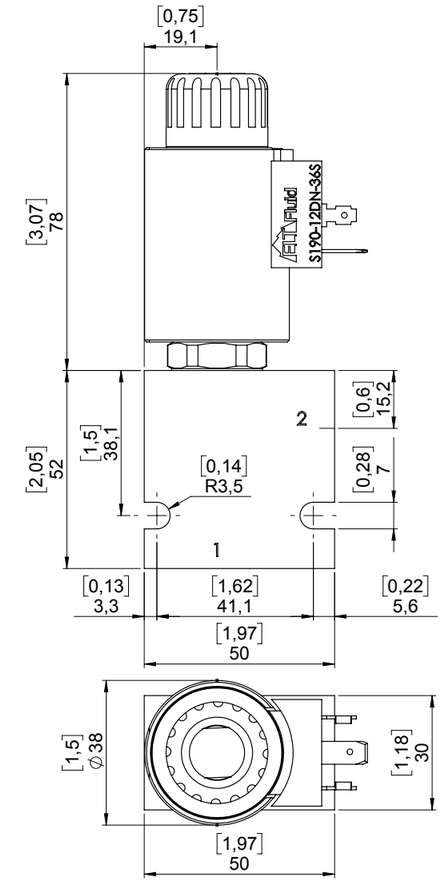

STANDARD HOUSING

Ordering code:	See page 9.02.001
Material:*	Aluminium/Steel Max working pressure for aluminum body: 210 bar Max working pressure for steel body: 350 bar

**Note:* To correctly select the material, in relation to application, see page S.003.

Ordering code

PE08MP-20 - - -

Seals
- None (std. NBR+PTFE)
- **Y**- Polyurethane
- For other options contact Sales dept.

*Options**
- None (std. without override)
- **EC**- Push pin

Connector
- **DN**- Din
- **DU**- Deutsch
- **AM**- Amp Junior

Range
- **1** - 20-130 bar (290-1885 psi)
- **2** - 50-250 bar (725-3626 psi)
- **3** - 70-350 bar (1015-5076 psi)

Material std. housing
- **A**- Aluminium
- **S**- Steel

Housing size ports
- None (std. only cartridge)
- **2B**- 1/4" BSP
- **3B**- 3/8" BSP
- **2S**- SAE 6
- **3S**- SAE 8

Voltage
- None (std. without coil)
- **12**- Vdc
- **24**- Vdc

**Note:* Information about manual override is available at page S.001

PE08MP-21

Electro proportional relief valve, direct acting, poppet type, increasing pressure with increasing current

Description

Pressure relief valve direct acting, poppet-type, which can be adjusted across a prescribed range using a variable electric input. Designed for application where pressure adjustment and low leakage is requested.

Operation mode

The valve does not allow flow from 2 to 1 until enough pressure on port 2 will offset the electric forced induced by the coil allowing flow from port 2 to port 1.
In case of no current applied to the coil the valve allows flow from port 2 to 1. ***GENERAL DATA***
Weight without coil: 0,19 Kg (0,41 lbs).
Ambient temperature range: -30 °C a 60 °C with seals standard (NBR).
Max proof pressure: 350 bar (4.350 psi) 50 bar (725 psi) in port 1.
Flow Max: 2 l/min (0,5 gpm).
Cartridge materials: high strength steel, internal parts hardened and grinding.

Drawing

Hydraulic symbol

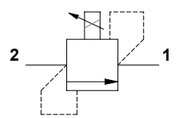

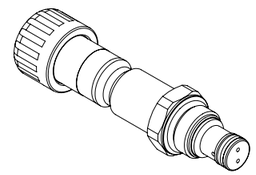

TECHNICAL DATA

HYDRAULIC

Max. working pressure:	350 bar (5.075 psi)
Max flow:	2 l/min
Fluid: *Viscosity:*	Mineral based oil From 15cSt to 250 cSt
Leakage:	1 cc/min P max. 350 bar (5.075 psi)
Standard seals:	O-ring NBR Seals Polyurethane
Cavity:	SCN0820
Installation torque:	27 Nm
Coil nut torque:	2 Nm
Max contamination level:	NAS 8 ISO 4406 19/17/14
Fluid temperature range:	From -20 °C to +80 °C
Seal kit std.:	5AG0024

ELECTRIC

Type of feeding:	PWM constant current
Insulation index:	H
Hysteresis:	+/- 5 %
Max current 12 Vcc:	1800 mA
Max current 24 Vcc:	900 mA
PWM:*	200 Hz
Coil code: *(see page 9.02.002)*	S190-26S

Note: For temperature or special conditions contact our sales department.

Performance graph

Oil viscosity: 46 cSt (217 SSU) Fluid temperature: 40 °C
At imput flow 12 l/min (0,31 gpm)

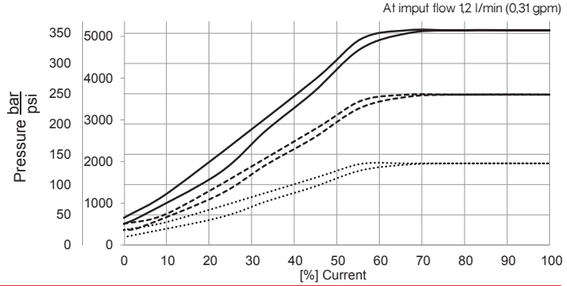

PE08MP-21

Inches
Millimeters

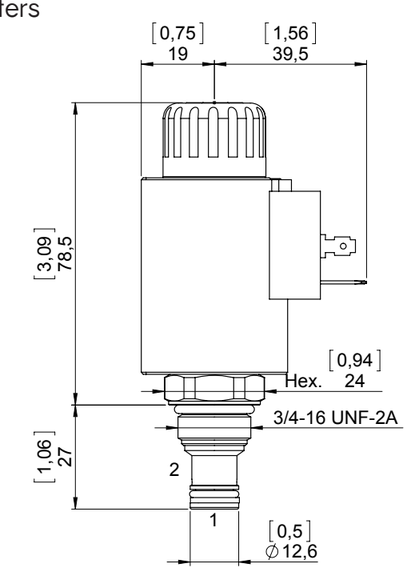

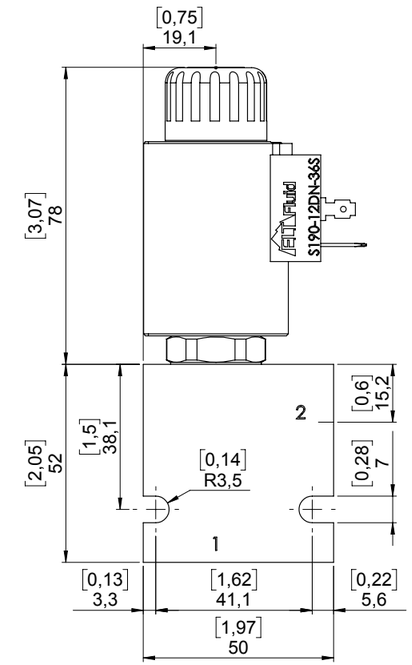

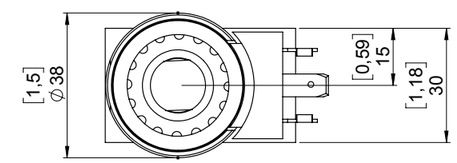

STANDARD HOUSING

Ordering code:	See page 9.02.001
Material:*	Aluminium/Steel Max working pressure for aluminum body: 210 bar Max working pressure for steel body: 350 bar

Note: To correctly select the material, in relation to application, see page S.003.

Ordering code

PE08MP-21 - - -

Seals
- None (std. NBR+PTFE)
- **Y**- Polyurethane
- For other options contact Sales dept.

*Options**
- None (std. without override)
- **EC**- Push pin

Connector
- **DN**- Din
- **DU**- Deutsch
- **AM**- Amp Junior

Material std. housing
- **A**- Aluminium
- **S**- Steel

Housing size ports
- None (std. only cartridge)
- **2B**- 1/4" BSP
- **3B**- 3/8" BSP
- **2S**- SAE 6
- **3S**- SAE 8

Range
- **1** - 20-130 bar (290-1885 psi)
- **2** - 50-250 bar (725-3626 psi)
- **3** - 70-350 bar (1015-5076 psi)

Voltage
- None (std. without coil)
- **12**- Vdc
- **24**- Vdc

Note: Information about manual override is available at page S.001

PE10MP-22

Electro proportional relief valve, pilot operated, spool type, increasing pressure with increasing current

Description

Pressure relief valve, pilot operated, which can be adjusted across a prescribed range using a variable electric input. Designed for application where pressure adjustment and low leakage is requested.

Operation mode

The valve do not allow flow from 1 to 2 until enough pressure on port 1 will offset the electric forced induced by the coil allowing flow from port 1 to port 2. In case of no current applied to the coil the valve allows flow from port 1 to 2.

GENERAL DATA

Weight without coil: 0,28 Kg (0,62 lbs).
Ambient temperature range: -30 °C a 60 °C with standard seals (NBR).
Max. proof pressure: 350 bar (5.075 psi).
Flow Max: 100 l/min (26,4 gpm).
Cartridge materials: high strength steel, internal parts hardened and grinding.

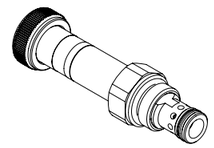

Drawing

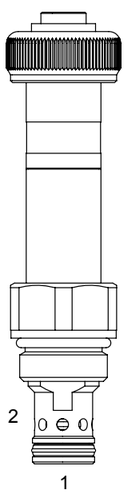

Hydraulic symbol

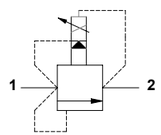

TECHNICAL DATA

HYDRAULIC

Max. working pressure:	350 bar (5.075 psi)
Flow rate:	See performance graph
Fluid: *Viscosity:*	Mineral based oil From 15cSt to 250 cSt
Leakage:	150 cc/min P max. 210 bar (3.045 psi)
Standard seals:	O-ring NBR Seals Polyurethane
Cavity:	SCN1020
Installation torque:	35 Nm
Coil nut torque:	2 Nm
Max contamination level:	NAS 8 ISO 4406 19/17/14
Fluid temperature range:	From -20 °C to +80 °C
Seal kit std.:	5AG0026

ELECTRIC

Type of feeding:	PWM constant current
Insulation index:	H
Nominal voltage:	+/- 10 %
Max current 12 Vcc:	1800 mA
Max current 24 Vcc:	900 mA
PWM:*	200 Hz
Coil code: *(see page 9.02.002)*	S190-26S

**Note:* For temperature or special conditions contact our sales department.

Relief pressure vs flow - Caracteristic flow from 1 to 2

Oil viscosity: 46 cSt (217 SSU) Fluid temperature: 40 °C

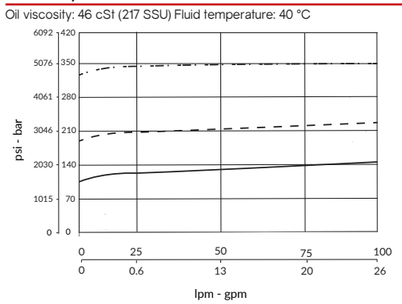

Performance graph

Oil viscosity: 46 cSt (217 SSU) Fluid temperature: 40 °C

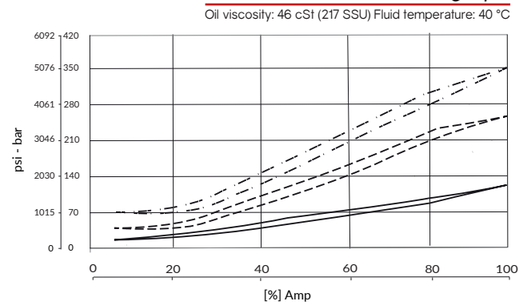

PE10MP-22

Inches
Millimeters

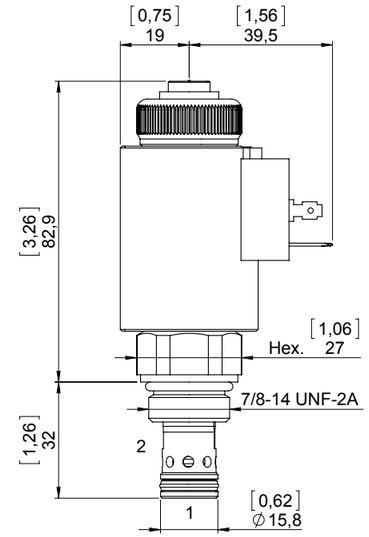

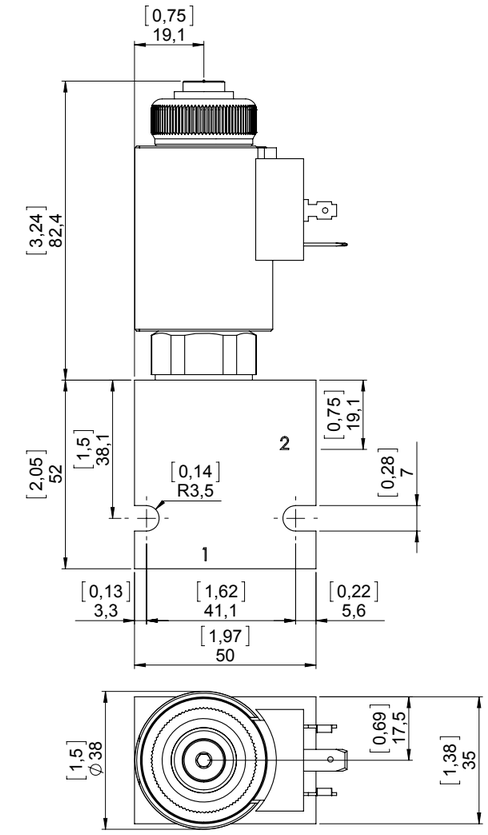

STANDARD HOUSING

Ordering code:	See page 9.03.001
Material:*	Aluminium/Steel Max working pressure for aluminum body: 210 bar Max working pressure for steel body: 350 bar

**Note:* To correctly select the material, in relation to application, see page S.003.

Ordering code

PE10MP-22 - - -

Seals
- None (std. NBR+PTFE)
- **Y**- Polyurethane
- For other options contact Sales dept.

*Options**
- None (std. without override)
- **P** - Push
- **SV**- Screw in

Connector
- **DN**- Din
- **DU**- Deutsch
- **AM**- Amp Junior

Material std. housing
- **A**- Aluminium
- **S**- Steel

Housing size ports
- None (std. only cartridge)
- **3B**- 3/8" BSP
- **4B**- 1/2" BSP
- **3S** - SAE 8
- **4S** - SAE 10

Range
- **1** - 20-130 bar (290-1885 psi)
- **2** - 50-250 bar (725-3626 psi)
- **3** - 70-350 bar (1015-5076 psi)

Voltage
- None (std. without coil)
- **12**- Vdc
- **24**- Vdc

**Note:* Information about manual override is available at page S.001

PE10MP-27

Electro proportional relief valve, pilot operated, spool type, increasing pressure with decreasing current

Description

Pressure relief valve pilot operated, spool type, which can be adjusted across a prescribed range using a variable electric input. Designed for application where pressure adjustment and low leakage is requested.

Operation mode

The valve does allow flow from 1 to 2 if pressure on port 1 will offset spring force allowing flow from port 1 to port 2.
In case of no current applied to the coil the valve will reach the maximum mechanically regulated pressure. The regulated pressure will proportionally decrise with the increase of the electric input current.

GENERAL DATA

Weight without coil: 0,28 Kg (0,62 lbs).
Ambient temperature range: -30 °C a 60 °C with standard seals (NBR).
Max. proof pressure: 350 bar (5.075 psi).
Flow Max: 100 l/min (26,4 gpm).
Cartridge materials: high strength steel, internal parts hardened and grinding.

Drawing

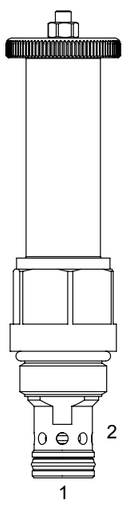

Hydraulic symbol

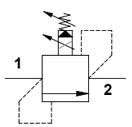

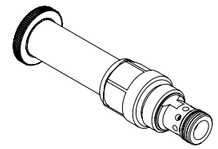

TECHNICAL DATA

HYDRAULIC

Max. working pressure:	350 bar (5.075 psi)
Flow rate:	See performance graph
Fluid: *Viscosity:*	Mineral based oil From 15cSt to 250 cSt
Leakage:	150 cc/min P max. 210 bar (3.045 psi)
Standard seals:	O-ring NBR Seals Polyurethane
Cavity:	SCN1020
Installation torque:	35 Nm
Coil nut torque:	2 Nm
Installation torque nut Hex. 7:	4 Nm
Max contamination level:	NAS 8 ISO 4406 19/17/14
Fluid temperature range:	From -20 °C to +80 °C
Seal kit std.:	5AG0026

ELECTRIC

Type of feeding:	PWM constant current
Insulation index:	H
Nominal voltage:	+/- 10 %
Max current 12 Vcc:	1800 mA
Max current 24 Vcc:	900 mA
PWM:*	200 Hz
Coil code: *(see page 9.02.002)*	S190-26S

**Note:* For temperature or special conditions contact our sales department.

Relief pressure vs flow - Caracteristic flow from 1 to 2

Oil viscosity: 46 cSt (217 SSU) Fluid temperature: 40 °C

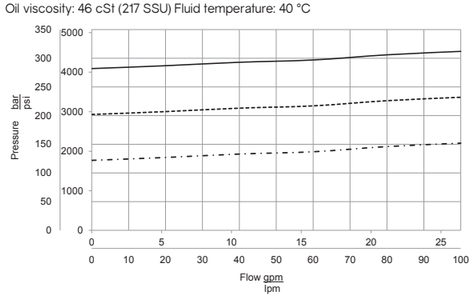

Performance graph

Oil viscosity: 46 cSt (217 SSU) Fluid temperature: 40 °C

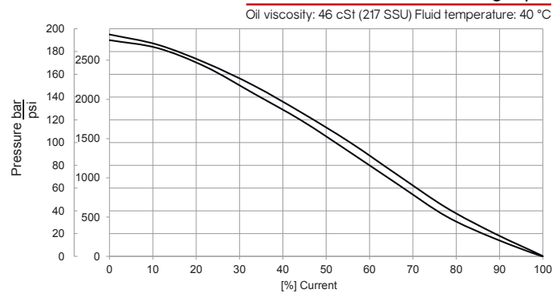

PE10MP-27

Inches
Millimeters

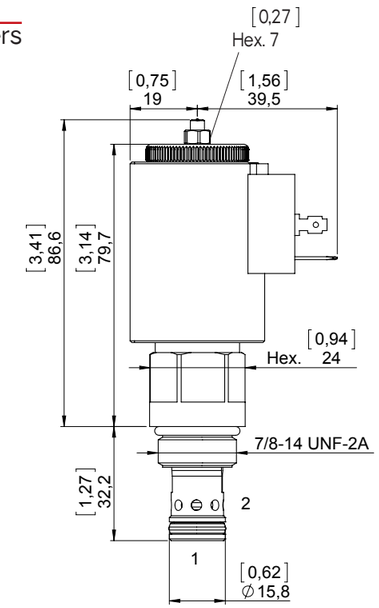

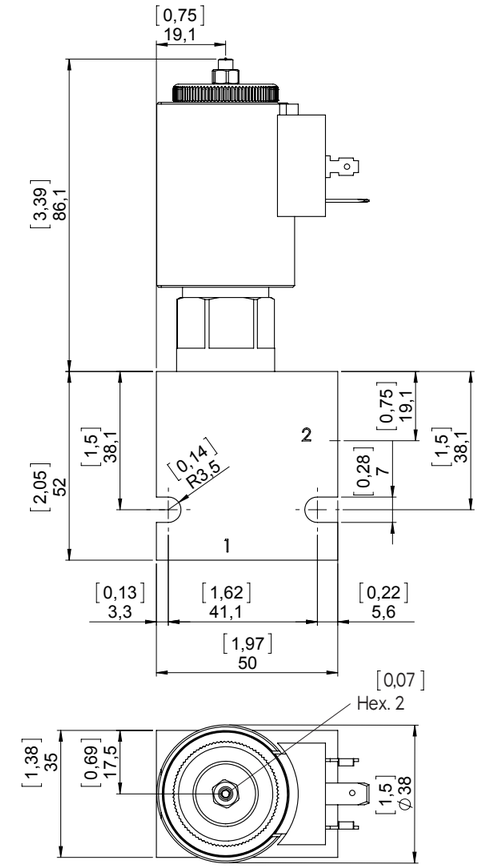

STANDARD HOUSING

Ordering code:	See page 9.03.001
Material:*	Aluminium/Steel Max working pressure for aluminum body: 210 bar Max working pressure for steel body: 350 bar

**Note:* To correctly select the material, in relation to application, see page S.003.

Ordering code

PE10MP-27 - - - -

Seals
- None (std. NBR+PTFE)
- **Y**- Polyurethane
- For other options contact Sales dept.

Connector
- **DN**- Din
- **DU**- Deutsch
- **AM**- Amp Junior

Material std. housing
- **A**- Aluminium
- **S**- Steel

Housing size ports
- None (std. only cartridge)
- **3B**- 3/8" BSP
- **4B**- 1/2" BSP
- **3S** - SAE 8
- **4S** - SAE 10

Manual adjustment
(Max pressure manual adjustment)
- 100-130 bar (1450-1885 psi)
- 180-250 bar (2611-3626 psi)
- 240-350 bar (3481-5076 psi)

Range
- **1** - 20-130 bar (290-1885 psi)
- **2** - 50-250 bar (725-3626 psi)
- **3** - 70-350 bar (1015-5076 psi)

Voltage
- None (std. without coil)
- **12**- Vdc
- **24**- Vdc

**Note:* Information about manual override is available at page S.001

PE08RP-3X2

Electro proportional pressure reducing/relieving valve, differential area, increasing pressure with increasing current

Description

Pressure reducing/relieving valve, differential area, which can be adjusted across a prescribed range using a variable electric input. Output pressure is proportional to DC current input. Designed for use as a pressure-limiting device in demanding applications.

Operation mode

Increasing electric current will also increase proportionally the control-reduced pressure at port 1. If pressure at 1 exceeds the setting induced by the coil, pressure from 1 is relieved to 3.
In case of no current applied to the coil the valve will allow flow from port 1 to 3.

GENERAL DATA

Weight: 0,11 Kg (0,25 lbs).
Ambient temperature range: -30 °C a 60 °C with seals standard (NBR).
Max proof pressure: 50 bar (725 psi).
Flow Max: 4 l/min (1,05 gpm).
Cartridge materials: high strength steel, internal parts hardened and grinding

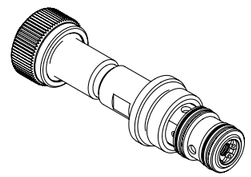

Drawing

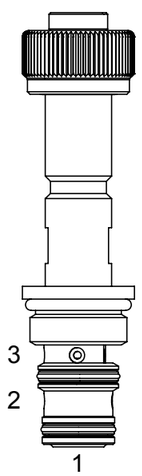

Hydraulic symbol

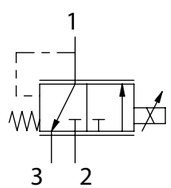

TECHNICAL DATA

HYDRAULIC	
Max. working pressure:	50 bar (725 psi)
Flow rate:	See performance graph
Fluid: *Viscosity:*	Mineral based oil From 15cSt to 250 cSt
Leakage:	100 cc/min
Standard seals:	O-ring NBR Seals Poliutethane
Cavity:	SCX0830
Installation torque:	27 Nm
Coil nut torque:	2 Nm
Max contamination level:	NAS 8 ISO 4406 19/17/14
Fluid temperature range:	From -20 °C to +80 °C
Seal kit std.:	5AG0034
ELECTRIC	
Type of feeding:	PWM constant current
Insulation index:	H
Hysteresis:	+/- 5 %
Max current 12 Vcc:	1500 mA
Max current 24 Vcc:	750 mA
PWM:*	70 Hz
Coil code: *(see page 9.01.003)*	S130-22S

**Note:* For temperature or special conditions contact our sales department.

Pressure drop

Oil viscosity: 46 cSt (217 SSU) Fluid temperature: 40 °C

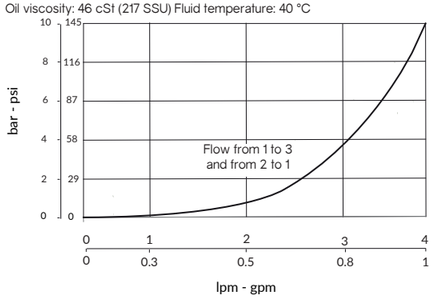

Performance graph

Oil viscosity: 46 cSt (217 SSU) Fluid temperature: 40 °C

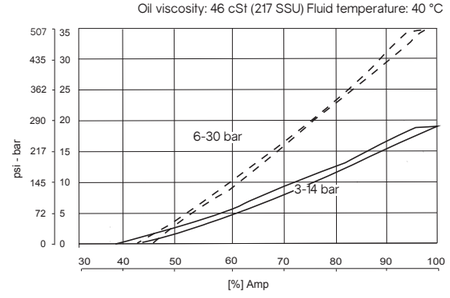

PE08RP-3X2

Inches
Millimeters

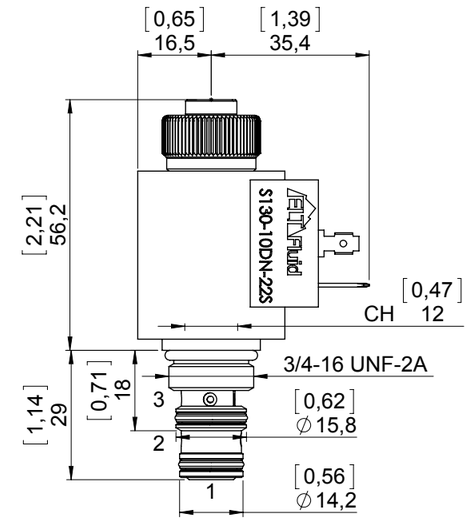

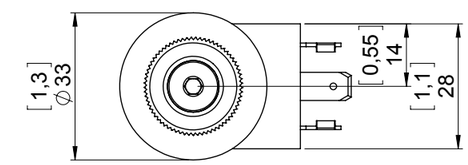

Ordering code

PE08RP-3X2 -

Seals
- None (std. NBR+PTFE)
- **Y**- Polyurethane
- For other options contact Sales dept.

Options*
- None (std. without override)
- **SV**- Screw in
- **P**- Push

Connector
- **DN**- Din
- **DU**- Deutsch
- **AM**- Amp Junior

Range
- **1** - 20-130 bar (290-1885 psi)
- **2** - 50-250 bar (725-3626 psi)
- **3** - 70-350 bar (1015-5076 psi)

Voltage
- None (std. without coil)
- **12**- Vdc
- **24**- Vdc

**Note:* Information about manual override is available at page S.001

FE10PS-33

Electro-proportional valve, 3 ways, flow control

Description

Electro proportional 3 ways flow control valve normally open when de-energized, to be used with a pressure compensator.

Operation mode

The valve provides regulated flow from port 2 to port 3. Port 1 should be plugged to blance the spool. Flow is inversely proportional to current applied to solenoid. Use in tandem with a preesure compesator setting 11 to 16 bar.

GENERAL DATA

Weight without coil: 0,29 Kg (0,62 lbs).
Ambient temperature range: -30 °C a 60 °C with seals standard (NBR).
Max proof pressure: 350 bar (5.050 psi).
Flow Max: 30 l/min (8 gpm).
Cartridge materials: high strength steel, internal parts hardened and grinding.

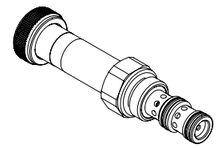

Drawing

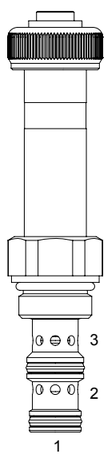

Hydraulic symbol

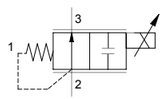

TECHNICAL DATA

HYDRAULIC	
Max. working pressure:	300 bar (4.350 psi)
Flow rate:	See performance graph
Fluid: *Viscosity:*	Mineral based oil From 15cSt to 250 cSt
Leakage:	150 cc/min P max. 210 bar (3.045 psi)
Standard seals:	O-ring NBR Seals Polyurethane
Cavity:	SCN1030
Installation torque:	33 Nm
Coil nut torque:	2 Nm
Max contamination level:	NAS 8 ISO 4406 19/17/14
Fluid temperature range:	From -20 °C to +80 °C
Seal kit std.:	5AG0017
ELECTRIC	
Type of feeding:	PWM constant current
Insulation index:	H
Hysteresis:	+/- 5 %
Max current 12 Vcc:	1800 mA
Max current 24 Vcc:	900 mA
PWM:*	120 Hz
Coil code: *(see page 9.02.002)*	S190-26S

**Note:* For temperature or special conditions contact our sales department.

Pressure drop

Oil viscosity: 46 cSt (217 SSU) Fluid temperature: 40 °C

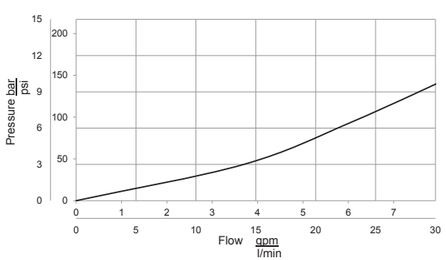

Performance graph

Oil viscosity: 46 cSt (217 SSU) Fluid temperature: 40 °C
Regulater Flow vs. % Current with compensator 11 bar

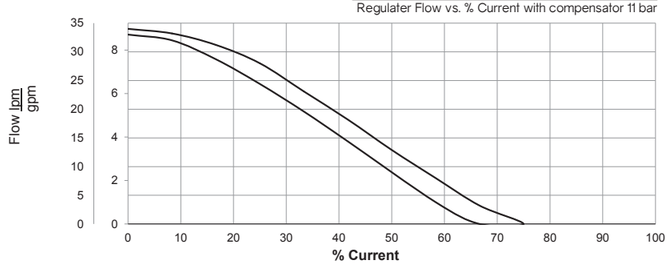

FE10PS-33

Inches
Millimeters

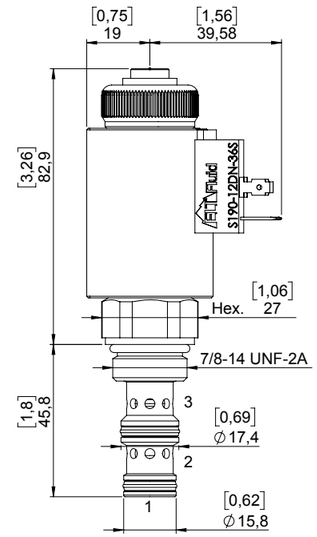

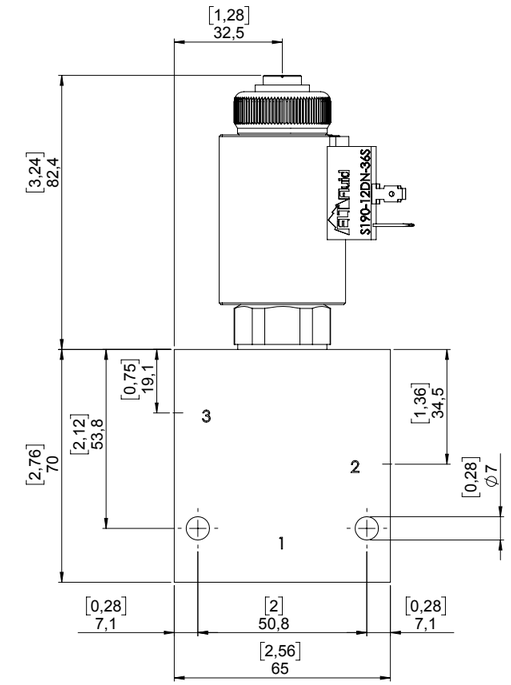

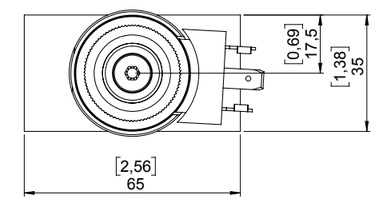

STANDARD HOUSING

Ordering code:	See page 9.03.002
Material:*	Aluminium/Steel Max working pressure for aluminum body: 210 bar Max working pressure for steel body: 350 bar

**Note:* To correctly select the material, in relation to application, see page S.003.

Ordering code

FE10PS-33 - -

Seals
- None (std. NBR+Polyurethane)
- **Y**- Polyurethane
- For other options contact Sales dept.

*Options**
- None (std. without override)
- **P**- Push
- **SV**- Screw in

Connector
- **DN**- Din
- **DU**- Deutsch
- **AM**- Amp Junior

Voltage
- None (std. without coil)
- **12**- Vdc
- **24**- Vdc

Material std. housing
- **A**- Aluminium
- **S**- Steel

Housing size ports
- None (std. only cartridge)
- **3B**- 3/8" BSP
- **4B**- 1/2" BSP
- **3S**- SAE 8
- **4S**- SAE 10

**Note:* Information about manual override is available at page S.001

FE10PS-34

Electro-proportional spool valve
3 way flow control

Description

Proportional solenoid operated 3 way flow control valve normally closed when de-energized, to be used with a pressure compensator.

Operation mode

The valve provides regulated flow from port 3 to port 2. Port 1 should be plugged to blance the spool. Flow is proportional to the increase of the current applied to solenoid. Use in tandem with a preesure compesator setting 11 to 16 bar.

GENERAL DATA

Weight without coil: 0,29 Kg (0,62 lbs).
Ambient temperature range: -30 °C a 60 °C with seals standard (NBR).
Max proof pressure: 350 bar (5.050 psi).
Flow Max: 30 l/min (8 gpm).
Cartridge materials: high strength steel, internal parts hardened and grinding.

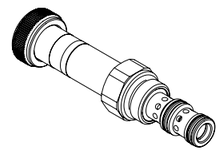

Drawing

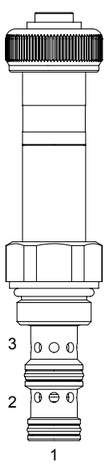

Hydraulic symbol

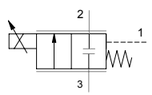

TECHNICAL DATA

HYDRAULIC	
Max. working pressure:	300 bar (4.350 psi)
Flow rate:	See performance graph
Fluid: *Viscosity:*	Mineral based oil From 15cSt to 250 cSt
Leakage:	150 cc/min P max. 210 bar (3.045 psi)
Standard seals:	O-ring NBR Seals Polyurethane
Cavity:	SCN1030
Installation torque:	33 Nm
Coil nut torque:	2 Nm
Max contamination level:	NAS 8 ISO 4406 19/17/14
Fluid temperature range:	From -20 °C to +80 °C
Seal kit std.:	5AG0017
ELECTRIC	
Type of feeding:	PWM constant current
Insulation index:	H
Hysteresis:	+/- 5 %
Max current 12 Vcc:	1800 mA
Max current 24 Vcc:	900 mA
PWM:*	120 Hz
Coil code: *(see page 9.02.002)*	S190-26S

**Note:* For temperature or special conditions contact our sales department.

Pressure drop

Oil viscosity: 46 cSt (217 SSU) Fluid temperature: 40 °C

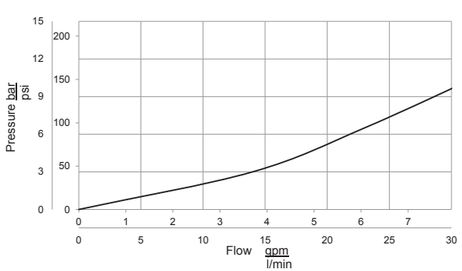

Performance graph

Oil viscosity: 46 cSt (217 SSU) Fluid temperature: 40 °C
Regulater Flow vs. % Current with compensator 11 bar

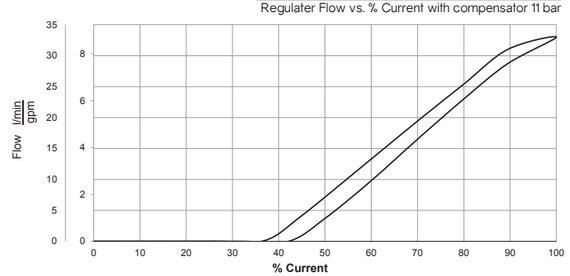

FE10PS-34

Inches
Millimeters

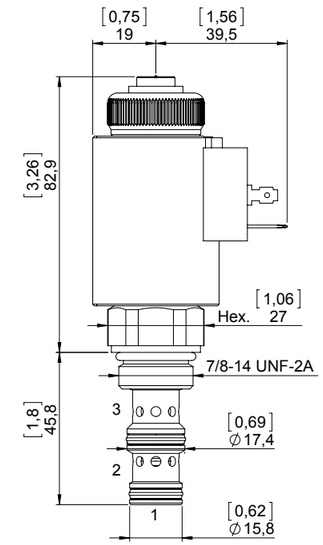

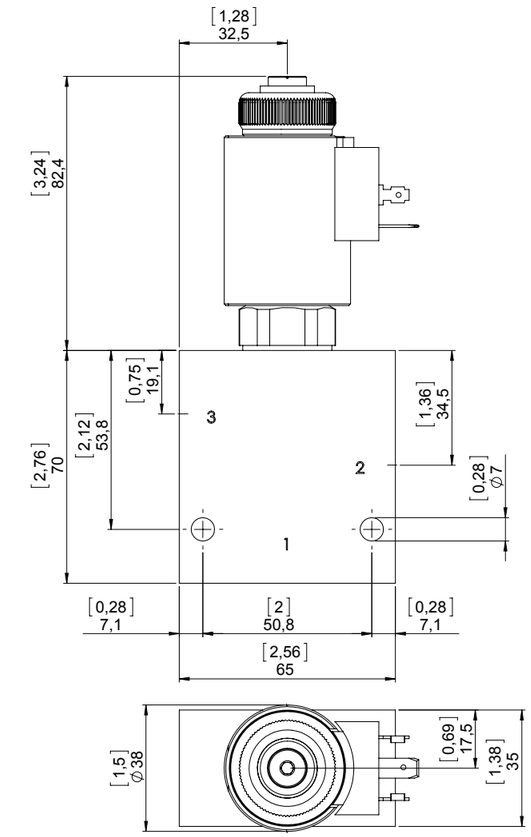

STANDARD HOUSING

Ordering code:	See page 9.03.002
Material:*	Aluminium/Steel Max working pressure for aluminum body: 210 bar Max working pressure for steel body: 350 bar

**Note:* To correctly select the material, in relation to application, see page S.003.

Ordering code

FE10PS-34 - -

Seals
- None (std. NBR+Polyurethane)
- **Y**- Polyurethane
- For other options contact Sales dept.

*Options**
- None (std. without override)
- **P**- Push
- **SV**- Screw in

Connector
- **DN**- Din
- **DU**- Deutsch
- **AM**- Amp Junior

Voltage
- None (std. without coil)
- **12**- Vdc
- **24**- Vdc

Material std. housing
- **A**- Aluminium
- **S**- Steel

Housing size ports
- None (std. only cartridge)
- **3B**- 3/8" BSP
- **4B**- 1/2" BSP
- **3S**- SAE 8
- **4S**- SAE 10

**Note:* Information about manual override is available at page S.001

FE10PS-35

Electro-proportional spool valve
3 way flow control

Description

Proportional solenoid operated 3 way flow control valve normally closed when de-energized, to be used with a pressure compensator.

Operation mode

The valve provides regulated flow from port 3 to port 2. Port 1 should be connected to tank as a drain line for port 2 . Flow is proportional to the increase of the current applied to solenoid. Use in tandem with a preesure compesator setting 11 to 16 bar.

GENERAL DATA

Weight without coil: 0,29 Kg (0,62 lbs).
Ambient temperature range: -30 °C a 60 °C with seals standard (NBR).
Max proof pressure: 350 bar (5.075 psi).
Flow Max: 30 l/min (8 gpm).
Cartridge materials: high strength steel, internal parts hardened and grinding.

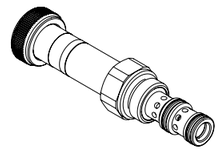

Drawing

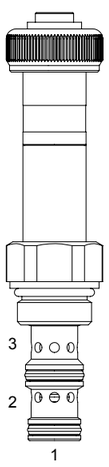

Hydraulic symbol

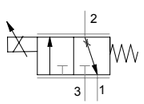

TECHNICAL DATA

HYDRAULIC	
Max. working pressure:	300 bar (4.350 psi)
Flow rate:	See performance graph
Fluid: *Viscosity:*	Mineral based oil From 15cSt to 250 cSt
Leakage:	150 cc/min P max. 210 bar (3.045 psi)
Standard seals:	O-ring NBR Seals Polyurethane
Cavity:	SCN1030
Installation torque:	33 Nm
Coil nut torque:	2 Nm
Max contamination level:	NAS 8 ISO 4406 19/17/14
Fluid temperature range:	From -20 °C to +80 °C
Seal kit std.:	5AG0017
ELECTRIC	
Type of feeding:	PWM constant current
Insulation index:	H
Hysteresis:	+/- 5 %
Max current 12 Vcc:	1800 mA
Max current 24 Vcc:	900 mA
PWM:*	120 Hz
Coil code: *(see page 9.02.002)*	S190-26S

Note: For temperature or special conditions contact our sales department.

Pressure drop

Oil viscosity: 46 cSt (217 SSU) Fluid temperature: 40 °C

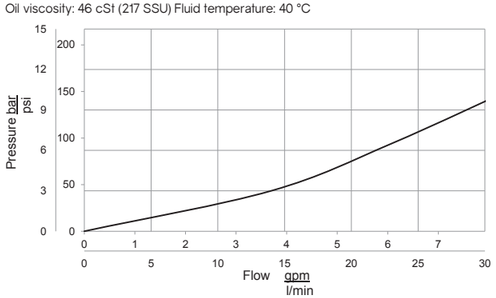

Performance graph

Oil viscosity: 46 cSt (217 SSU) Fluid temperature: 40 °C

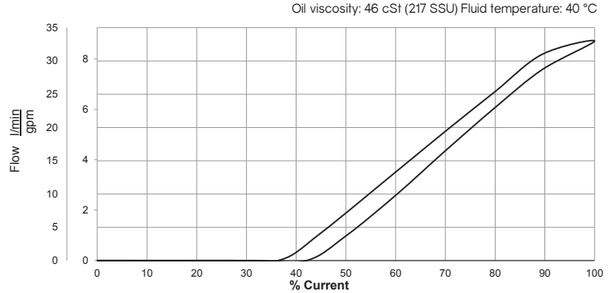

FE10PS-35

Inches
Millimeters

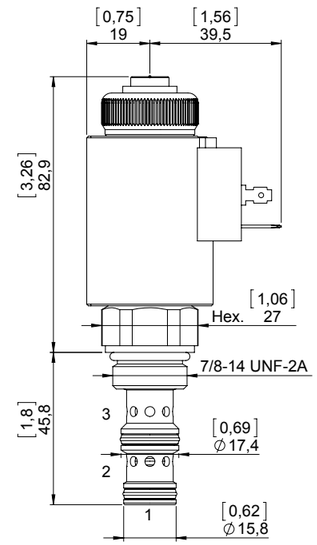

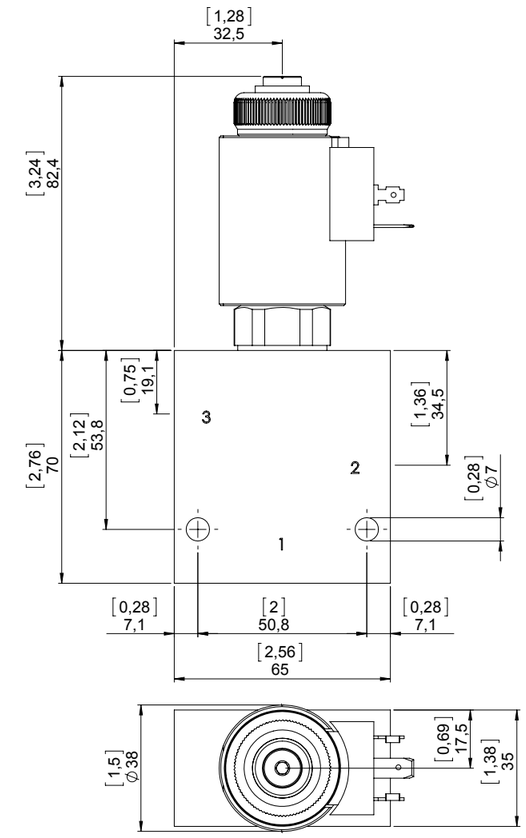

STANDARD HOUSING

Ordering code:	See page 9.03.002
Material:*	Aluminium/Steel Max working pressure for aluminum body: 210 bar Max working pressure for steel body: 350 bar

Note: To correctly select the material, in relation to application, see page S.003.

Ordering code

FE10PS-35 - -

Seals
- None (std. NBR+Polyurethane)
- **Y**- Polyurethane
- For other options contact Sales dept.

Options*
- None (std. without override)
- **P**- Push
- **SV**- Screw in

Connector
- **DN**- Din
- **DU**- Deutsch
- **AM**- Amp Junior

Voltage
- None (std. without coil)
- **12**- Vdc
- **24**- Vdc

Material std. housing
- **A**- Aluminium
- **S**- Steel

Housing size ports
- None (std. only cartridge)
- **3B**- 3/8" BSP
- **4B**- 1/2" BSP
- **3S**- SAE 8
- **4S**- SAE 10

Note: Information about manual override is available at page S.001

FE10PC-22

Electro-proportional pressure compensated 2 ways flow control valve

Description

Electro proportional flow control valve 2 ways unidirectional pressure compensated, spool-type, normally closed when de-energized.

Operation mode

The valve keeps a constant flow rate out of port 2 regardless of load pressure changes on port 2, or upstream of port 1. The valve will maintain the set flow regardless of pressure variations, with increasing current applied to the solenoid, it will increase output flow.

GENERAL DATA

Weight without coil: 0,29 Kg (0,64 lbs).
Ambient temperature range: -30 °C a 60 °C with seals standard (NBR).
Max proof pressure: 350 bar (5.075 psi).
Flow Max: 30 l/min (7,92 gpm).
Cartridge materials: high strength steel, internal parts hardened and grinding.

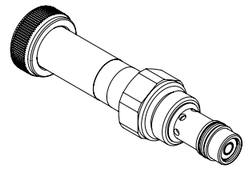

Drawing

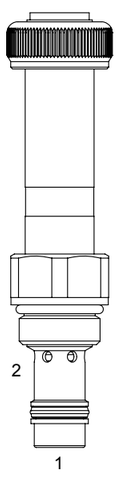

Hydraulic symbol

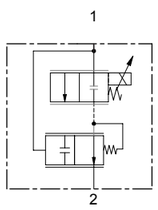

TECHNICAL DATA

HYDRAULIC	
Max. working pressure:	300 bar (4.350 psi)
Flow rate:	See performance graph
Fluid: *Viscosity:*	Mineral based oil From 15cSt to 250 cSt
Leakage:	150 cc/min P max. 210 bar (3.045 psi)
Standard seals:	O-ring NBR Seals Polyurethane
Cavity:	SCN1021
Installation torque:	33 Nm
Coil nut torque:	2 Nm
Max contamination level:	NAS 8 ISO 4406 19/17/14
Fluid temperature range:	From -20 °C to +80 °C
Seal kit std.:	5AG0047
ELECTRIC	
Type of feeding:	PWM constant current
Insulation index:	H
Hysteresis:	+/- 5 %
Max current 12 Vcc:	1800 mA
Max current 24 Vcc:	900 mA
PWM:*	120 Hz
Coil code: *(see page 9.02.002)*	S190-26S

Note: For temperature or special conditions contact our sales department.

Priority flow vs load

Oil viscosity: 46 cSt (217 SSU) Fluid temperature: 40 °C

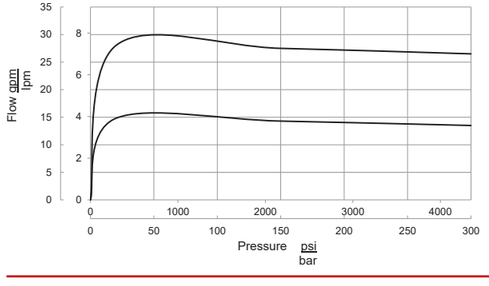

Regulated flow vs current

At imput flow 30 l/min (7,92 gpm)

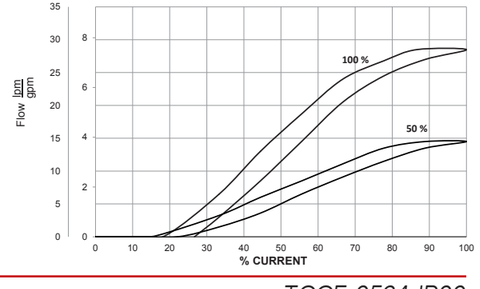

FE10PC-22

Inches
Millimeters

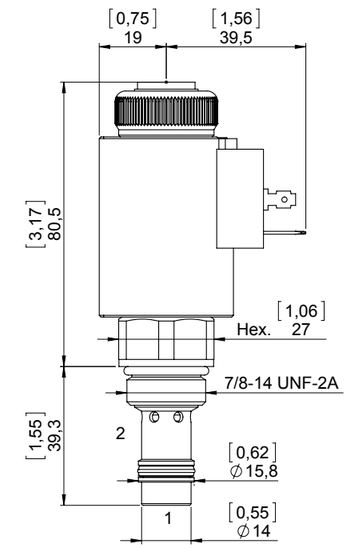

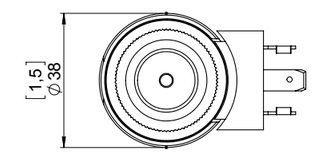

Ordering code

FE10PC-22 - -

Seals
- None (std. NBR+Polyurethane)
- **Y**- Polyurethane
- For other options contact Sales dept.

Options*
- None (std. without override)
- **S**- Screw

Voltage
- None (std. without coil)
- **12**- Vdc
- **24**- Vdc

Flow
- **None**- 100%
- **5**- 50%

Connector
- **DN**- Din
- **DU**- Deutsch
- **AM**- Amp Junior

Note: Information about manual override is available at page S.001

FE10PC-27

Electro-proportional pressure compensated 2 ways flow control valve

Description

Electro proportional flow control valve 2 ways unidirectional pressure compensated, spool-type, normally open when de-energized.

Operation mode

The valve keeps a constant flow rate out of port 2 regardless of load pressure changes on port 2, or upstream of port 1. The valve will maintain the set flow regardless of pressure variations, with increasing current applied to the solenoid, it will decrise output flow.

GENERAL DATA

Weight without coil: 0,29 Kg (0,64 lbs).
Ambient temperature range: -30 °C a 60 °C with seals standard (NBR).
Max proof pressure: 350 bar (5.075 psi).
Flow Max: 30 l/min (7,92 gpm).
Cartridge materials: high strength steel, internal parts hardened and grinding.

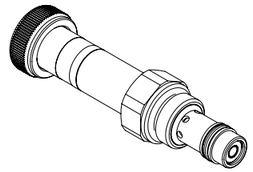

Drawing

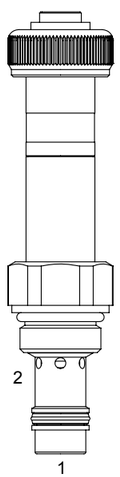

Hydraulic symbol

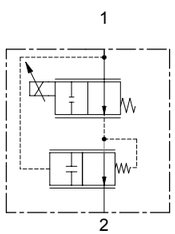

TECHNICAL DATA

HYDRAULIC	
Max. working pressure:	300 bar (4.350 psi)
Flow rate:	See performance graph
Fluid: *Viscosity:*	Mineral based oil From 15cSt to 250 cSt
Leakage:	150 cc/min P max. 210 bar (3.045 psi)
Standard seals:	O-ring NBR Seals Polyurethane
Cavity:	SCN1021
Installation torque:	33 Nm
Coil nut torque:	2 Nm
Max contamination level:	NAS 8 ISO 4406 19/17/14
Fluid temperature range:	From -20 °C to +80 °C
Seal kit std.:	5AG0047
ELECTRIC	
Type of feeding:	PWM constant current
Insulation index:	H
Hysteresis:	+/- 5 %
Max current 12 Vcc:	1800 mA
Max current 24 Vcc:	900 mA
PWM:*	120 Hz
Coil code: *(see page 9.02.002)*	S190-26S

**Note:* For temperature or special conditions contact our sales department.

Priority flow vs load

Oil viscosity: 46 cSt (217 SSU) Fluid temperature: 40 °C

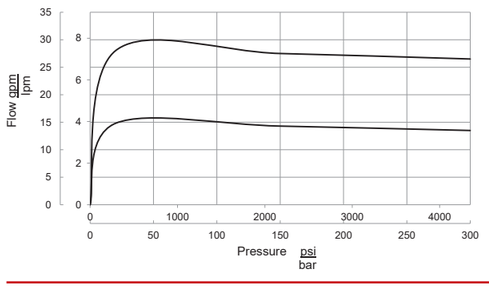

Regulated flow vs current

At imput flow 30 l/min (7,92 gpm)

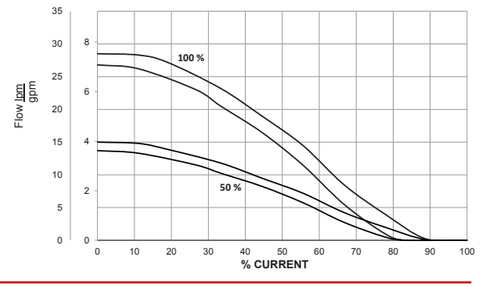

FE10PC-27

Inches
Millimeters

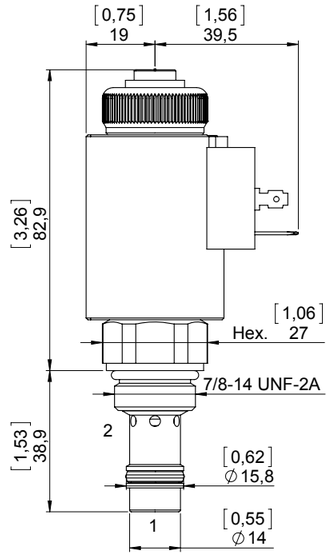

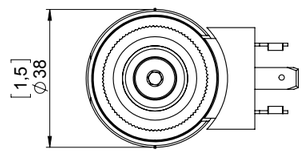

Ordering code

FE10PC-27 - -

Seals
- None (std. NBR+Polyurethane)
- **Y**- Polyurethane
- For other options contact Sales dept.

Options*
- None (std. without override)
- **SV**- Screw in

Voltage
- None (std. without coil)
- **12**- Vdc
- **24**- Vdc

Flow
- **None**- 100%
- **5**- 50%

Connector
- **DN**- Din
- **DU**- Deutsch
- **AM**- Amp Junior

**Note:* Information about manual override is available at page S.001

FE12PC-22

Electro-proportional pressure compensated 2 ways flow control valve

Description

Electro proportional flow control valve 2 ways unidirectional pressure compesated, spool-type, normally closed when de-energized.

Operation mode

The valve keeps a constant flow rate out of port 2 regardless of load pressure changes on port 2, or upstream of port 1.
The valve will maintain the set flow regardless of pressure variations, with increasing current applied to the solenoid, it will increase output flow.

GENERAL DATA

Weight without coil: 0,49 Kg (1,08 lbs).
Ambient temperature range: -30 °C a 60 °C with seals standard (NBR).
Max proof pressure: 350 bar (5.075 psi).
Flow Max: 50 l/min (13,2 gpm).
Cartridge materials: high strength steel, internal parts hardened and grinding.

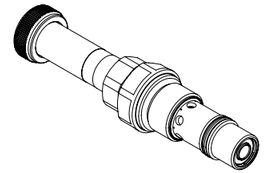

Drawing

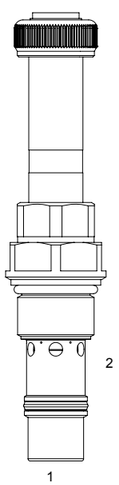

Hydraulic symbol

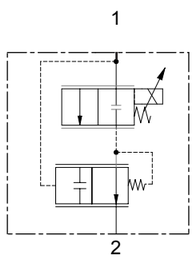

TECHNICAL DATA

HYDRAULIC	
Max. working pressure:	300 bar (4.350 psi)
Flow rate:	See performance graph
Fluid: *Viscosity:*	Mineral based oil From 15cSt to 250 cSt
Leakage:	200 cc/min P max. 210 bar (3.045 psi)
Standard seals:	O-ring NBR Seals Polyurethane
Cavity:	SCN1221
Installation torque:	47 Nm
Coil nut torque:	2 Nm
Max contamination level:	NAS 8 ISO 4406 19/17/14
Fluid temperature range:	From -20 °C to +80 °C
Seal kit std.:	5AG0048
ELECTRIC	
Type of feeding:	PWM constant current
Insulation index:	H
Hysteresis:	+/- 5 %
Max current 12 Vcc:	1800 mA
Max current 24 Vcc:	900 mA
PWM:*	120 Hz
Coil code: *(see page 9.02.002)*	S190-26S

**Note:* For temperature or special conditions contact our sales department.

Priority flow vs load

Oil viscosity: 46 cSt (217 SSU) Fluid temperature: 40 °C

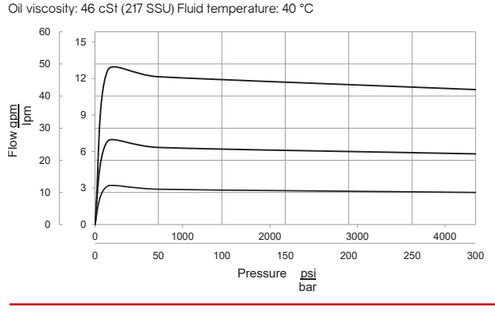

Regulated flow vs current

At imput flow 70 l/min (18,7 gpm)

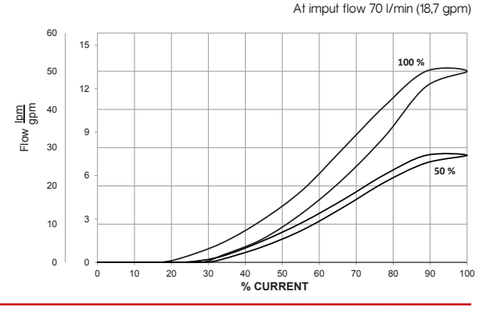

FE12PC-22

Inches
Millimeters

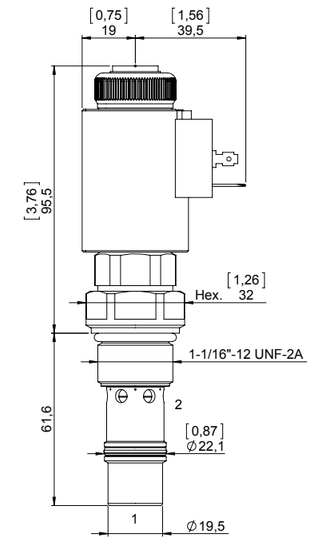

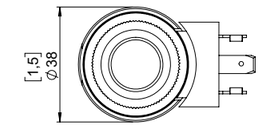

Ordering code

FE12PC-22 - -

Seals
- None (std. NBR+Polyurethane)
- **Y**- Polyurethane
- For other options contact Sales dept.

Options*
- None (std. without override)
- **S**- Screw

Voltage
- None (std. without coil)
- **12**- Vdc
- **24**- Vdc

Flow
- **None**- 100%
- **5**- 50%

Connector
- **DN**- Din
- **DU**- Deutsch
- **AM**- Amp Junior

**Note:* Information about manual override is available at page S.001

FE12PC-27

Electro-proportional pressure compensated 2 ways flow control valve

Description

Electro proportional flow control valve 2 ways unidirectional pressure compesated, spool-type, normally open when de-energized.

Operation mode

The valve keeps a constant flow rate out of port 2 regardless of load pressure changes on port 2, or upstream of port 1.
The valve will maintain the set flow regardless of pressure variations, with increasing current applied to the solenoid, it will decrise output flow.

GENERAL DATA

Weight without coil: 0,49 Kg (1,08 lbs).
Ambient temperature range: -30 °C a 60 °C with seals standard (NBR).
Max proof pressure: 350 bar (5.075 psi).
Flow Max: 50 l/min (13,2 gpm).
Cartridge materials: high strength steel, internal parts hardened and grinding.

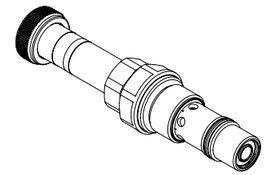

Drawing

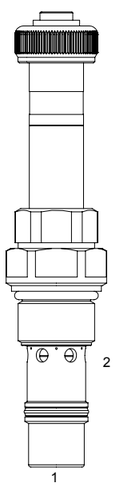

Hydraulic symbol

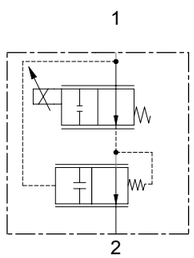

TECHNICAL DATA

HYDRAULIC	
Max. working pressure:	300 bar (4.350 psi)
Flow rate:	See performance graph
Fluid: *Viscosity:*	Mineral based oil From 15cSt to 250 cSt
Leakage:	200 cc/min P max. 210 bar (3.045 psi)
Standard seals:	O-ring NBR Seals Polyurethane
Cavity:	SCN1221
Installation torque:	47 Nm
Coil nut torque:	2 Nm
Max contamination level:	NAS 8 ISO 4406 19/17/14
Fluid temperature range:	From -20 to +80 °C
Seal kit std.:	5AG0048
ELECTRIC	
Type of feeding:	PWM constant current
Insulation index:	H
Hysteresis:	+/- 5 %
Max current 12 Vcc:	1800 mA
Max current 24 Vcc:	900 mA
PWM:*	120 Hz
Coil code: *(see page 9.02.002)*	S190-26S

**Note:* For temperature or special conditions contact our sales department.

Priority flow vs load

Oil viscosity: 46 cSt (217 SSU) Fluid temperature: 40 °C

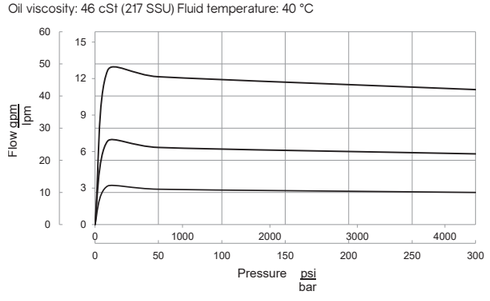

Regulated flow vs current

At imput flow 70 l/min (18,7 gpm)

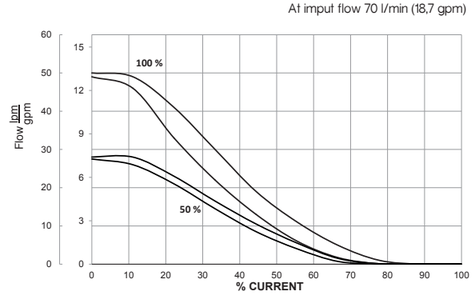

FE12PC-27

Inches
Millimeters

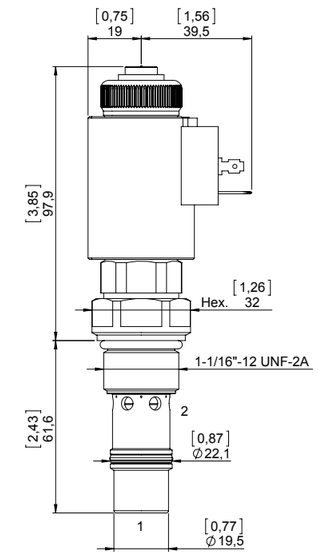

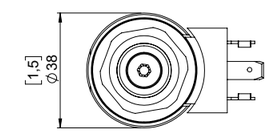

Ordering code

FE12PC-27 - -

Seals
- None (std. NBR+Polyurethane)
- **Y**- Polyurethane
- For other options contact Sales dept.

Options*
- None (std. without override)
- **SV**- Screw in

Voltage
- None (std. without coil)
- **12**- Vdc
- **24**- Vdc

Flow
- **None**- 100%
- **5**- 50%

Connector
- **DN**- Din
- **DU**- Deutsch
- **AM**- Amp Junior

**Note:* Information about manual override is available at page S.001

FE08PC-32

Electro-proportional pressure compensated 3 way flow control valve

Description

Proportional solenoid-operated 3 way flow control valve, unidirectional pressure compesated, spool-type, normally closed when de-energized.

Operation mode

The valve keeps a constant flow rate out of port 3 indipendently from pressure changes in the line 3, or in the line 2. The valve will maintain the set flow regardless of pressure variations, with increasing current applied to the solenoid, it will increase output flow. In case of use as a 2 way bypass flow regulator in applications where the line 2 port will be blocked, bypass pressure drop will increase unless a small leakage is provided in the line 3.

GENERAL DATA

Weight without coil: 0,14 Kg (0,3 lbs).
Ambient temperature range: -30 °C a 60 °C with seals standard (NBR).
Max proof pressure: 350 bar (5.075 psi).
Flow Max: 20 l/min (5,3 gpm).
Cartridge materials: high strength steel, internal parts hardened and grinding.

Drawing

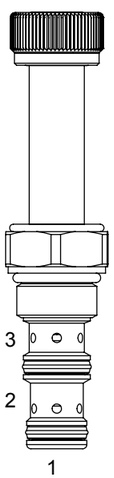

Hydraulic symbol

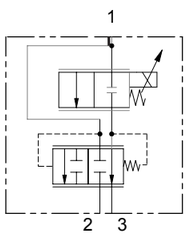

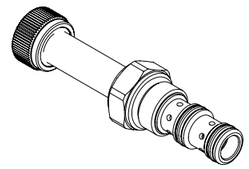

TECHNICAL DATA

HYDRAULIC

Max. working pressure:	300 bar (4.350 psi)
Flow rate:	See performance graph
Inlet flow:	20 l/min (5,3 gpm)
Fluid: *Viscosity:*	Mineral based oil From 15cSt to 250 cSt
Leakage:	150 cc/min P max. 210 bar (3.045 psi)
Standard seals:	O-ring NBR Seals Polyurethane
Cavity:	SCN0830
Installation torque:	27 Nm
Coil nut torque:	2 Nm
Max contamination level:	NAS 8 ISO 4406 19/17/14
Fluid temperature range:	From -20 °C to +80 °C
Seal kit std.:	5AG0049

ELECTRIC

Type of feeding:	PWM constant current
Insulation index:	H
Hysteresis:	+/- 5 %
Max current 12 Vcc:	1500 mA
Max current 24 Vcc:	750 mA
PWM:*	120 Hz
Coil code: *(see page 9.02.002)*	S130-22S

**Note:* For temperature or special conditions contact our sales department.

Priority flow vs load

Oil viscosity: 46 cSt (217 SSU) Fluid temperature: 40 °C

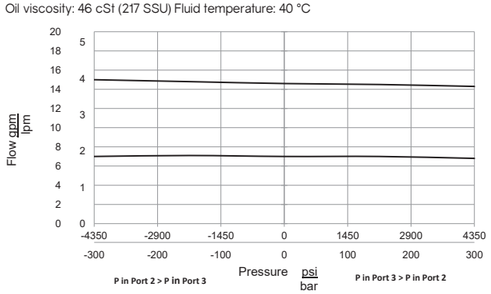

Regulated flow vs current

At imput flow 20 lpm (5,3 gpm)

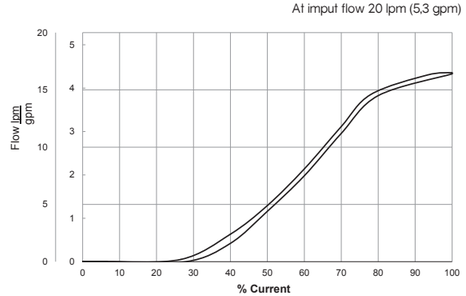

FE08PC-32

Inches
Millimeters

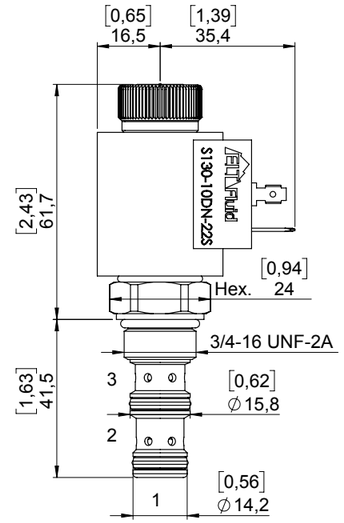

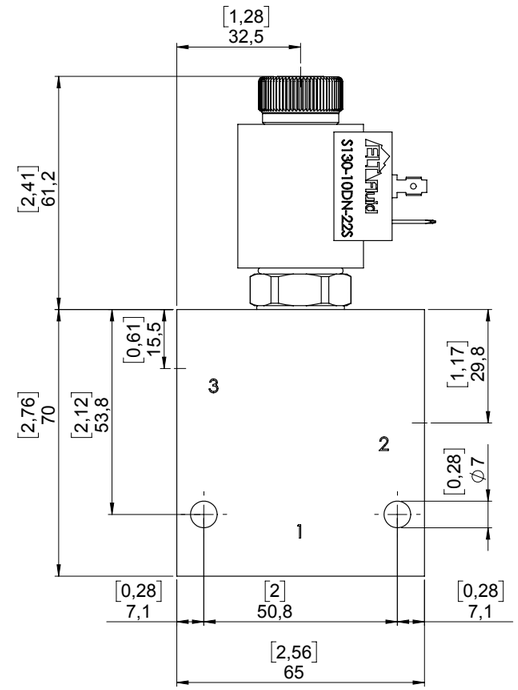

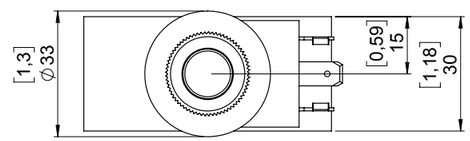

STANDARD HOUSING

Ordering code:	See page 9.02.002
Material:*	Aluminium/Steel Max working pressure for aluminum body: 210 bar Max working pressure for steel body: 350 bar

**Note:* To correctly select the material, in relation to application, see page S.003.

Ordering code

FE08PC-32 - - -

Seals
- None (std. NBR+Polyurethane)
- **Y**- Polyurethane
- For other options contact Sales dept.

*Options**
- None (std. without override)
- **S**- Screw out

Flow
- **None**- 100%
- **5**- 50%

Connector
- **DN**- Din
- **DU**- Deutsch
- **AM**- Amp Junior

Voltage
- None (std. without coil)
- **12**- Vdc
- **24**- Vdc

Material std. housing
- **A**- Aluminium
- **S**- Steel

Housing size ports
- None (std. only cartridge)
- **2B**- 1/4" BSP
- **3B**- 3/8" BSP
- **2S**- SAE 6
- **3S**- SAE 8

**Note:* Information about manual override is available at page S.001

FE08PC-37

Electro-proportional pressure compensated 3 way flow control valve

Description

Proportional solenoid-operated 3 way flow control valve unidirectional pressure compesated, spool-type, normally open when de-energized.

Operation mode

The valve keeps a constant flow rate out of port 3 indipendently from pressure changes in the line 3, or in the line 2. The valve will maintain the set flow regardless of pressure variations, with increasing current applied to the solenoid, it will reduce the output flow. In case of use as a 2 way bypass flow regulator in applications where the line 3 port will be blocked, bypass pressure drop will increase unless a small leakage is provided in the line 3.

GENERAL DATA

Weight without coil: 0,15 Kg (0,33 lbs).
Ambient temperature range: -30 °C a 60 °C with seals standard (NBR).
Max proof pressure: 350 bar (5.075 psi).
Flow Max: 20 l/min (5,3 gpm).
Cartridge materials: high strength steel, internal parts hardened and grinding.

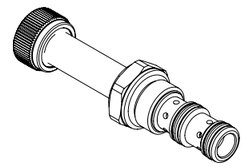

Drawing

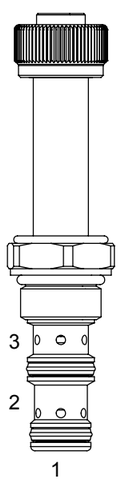

Hydraulic symbol

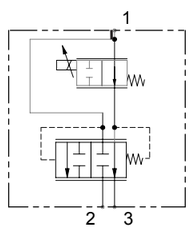

TECHNICAL DATA

HYDRAULIC	
Max. working pressure:	300 bar (4.350 psi)
Flow rate:	See performance graph
Inlet flow:	20 l/min (5,3 gpm)
Fluid: *Viscosity:*	Mineral based oil From 15cSt to 250 cSt
Leakage:	150 cc/min P max. 210 bar (3.045 psi)
Standard seals:	O-ring NBR Seals Polyurethane
Cavity:	SCN0830
Installation torque:	27 Nm
Coil nut torque:	2 Nm
Max contamination level:	NAS 8 ISO 4406 19/17/14
Fluid temperature range:	From -20 °C to +80 °C
Seal kit std.:	5AG0049
ELECTRIC	
Type of feeding:	PWM constant current
Insulation index:	H
Hysteresis:	+/- 5 %
Max current 12 Vcc:	1500 mA
Max current 24 Vcc:	750 mA
PWM:*	120 Hz
Coil code: *(see page 9.02.002)*	S130-22S

**Note:* For temperature or special conditions contact our sales department.

Priority flow vs load

Oil viscosity: 46 cSt (217 SSU) Fluid temperature: 40 °C

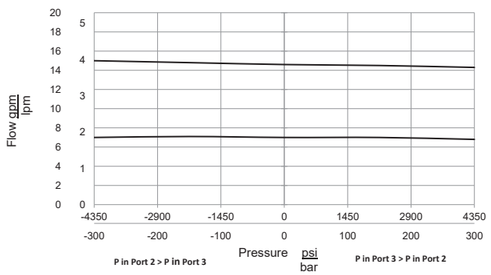

Regulated flow vs current

At imput flow 20 lpm (5,3 gpm)

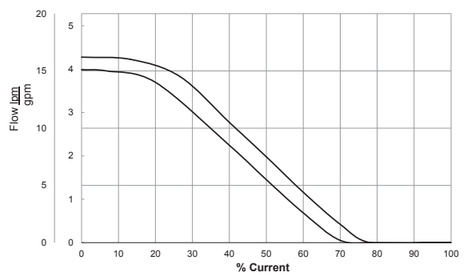

FE08PC-37

Inches
Millimeters

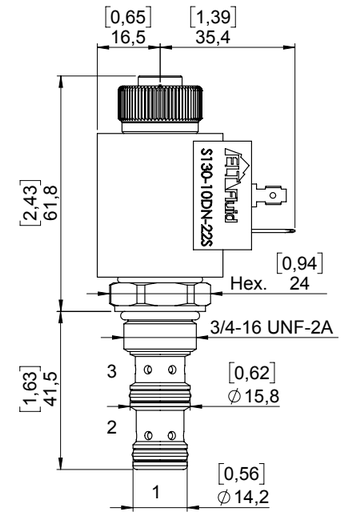

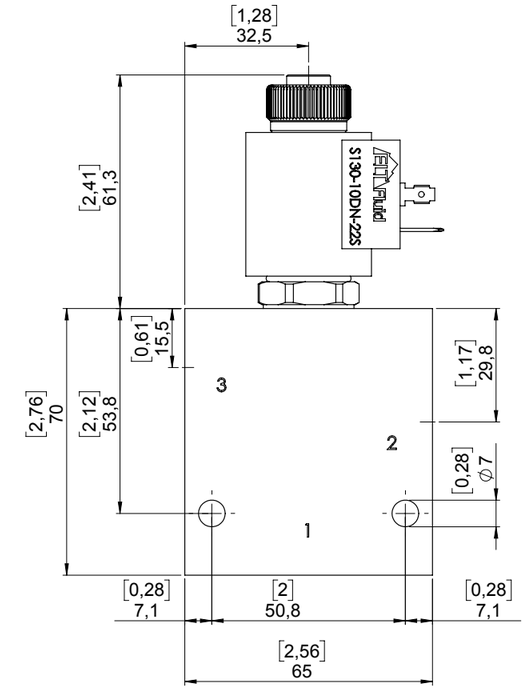

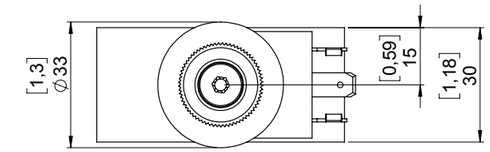

STANDARD HOUSING

Ordering code:	See page 9.02.002
Material:*	Aluminium/Steel Max working pressure for aluminum body: 210 bar Max working pressure for steel body: 350 bar

**Note:* To correctly select the material, in relation to application, see page S.003.

Ordering code

FE08PC-37 - - -

Seals
- None (std. NBR+Polyurethane)
- **Y**- Polyurethane
- For other options contact Sales dept.

*Options**
- None (std. without override)
- **S**- Screw out

Flow
- **None**- 100%
- **5**- 50%

Connector
- **DN**- Din
- **DU**- Deutsch
- **AM**- Amp Junior

Voltage
- None (std. without coil)
- **12**- Vdc
- **24**- Vdc

Material std. housing
- **A**- Aluminium
- **S**- Steel

Housing size ports
- None (std. only cartridge)
- **2B**- 1/4" BSP
- **3B**- 3/8" BSP
- **2S**- SAE 6
- **3S**- SAE 8

**Note:* Information about manual override is available at page S.001

FE10PC-32 Electro-proportional pressure compensated 3 ways flow control valve

Description

Electro proportional flow control valve 3 ways unidirectional pressure compesated, spool-type, normally closed when de-energized.

Operation mode

The valve keeps a constant flow rate out of port 3 indipendently from pressure changes in the line 3, or in the line 2. The valve will maintain the set flow regardless of pressure variations, with increasing current applied to the solenoid, it will increase output flow. In case of use as a 2 way bypass flow regulator in applications where the line 2 port will be blocked, bypass pressure drop will increase unless a small leakage is provided in the line 3.

GENERAL DATA

Weight without coil: 0,29 Kg (0,64 lbs).
Ambient temperature range: -30 °C a 60 °C with seals standard (NBR).
Max proof pressure: 350 bar (5.075 psi).
Flow Max: 30 l/min (8 gpm).
Cartridge materials: high strength steel, internal parts hardened and grinding.

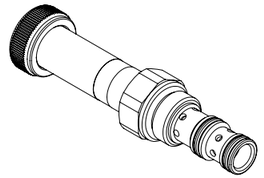

Drawing

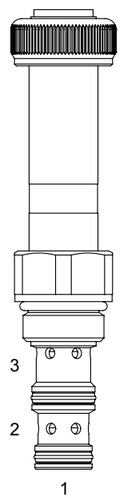

Hydraulic symbol

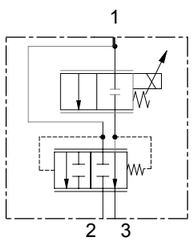

TECHNICAL DATA

HYDRAULIC

Max. working pressure:	300 bar (4.350 psi)
Flow rate:	See performance graph
Inlet flow:	50 l/min (13,2 gpm)
Fluid: *Viscosity:*	Mineral based oil From 15cSt to 250 cSt
Leakage:	150 cc/min P max. 210 bar (3.045 psi)
Standard seals:	O-ring NBR Seals Polyurethane
Cavity:	SCN1030
Installation torque:	33 Nm
Coil nut torque:	2 Nm
Max contamination level:	NAS 8 ISO 4406 19/17/14
Fluid temperature range:	From -20 °C to +80 °C
Seal kit std.:	5AG0017

ELECTRIC

Type of feeding:	PWM constant current
Insulation index:	H
Hysteresis:	+/- 5 %
Max current 12 Vcc:	1800 mA
Max current 24 Vcc:	900 mA
PWM:*	120 Hz
Coil code: *(see page 9.02.002)*	S190-26S

**Note:* For temperature or special conditions contact our sales department.

Priority flow vs load

Oil viscosity: 46 cSt (217 SSU) Fluid temperature: 40 °C

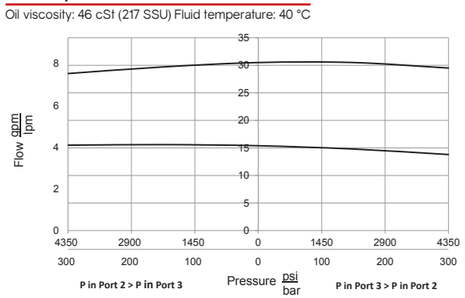

Regulated flow vs current

At imput flow 50 l/min (13,3 gpm)

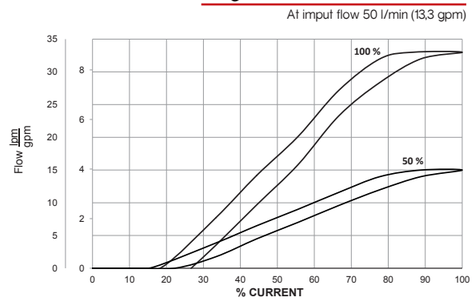

FE10PC-32

Inches
Millimeters

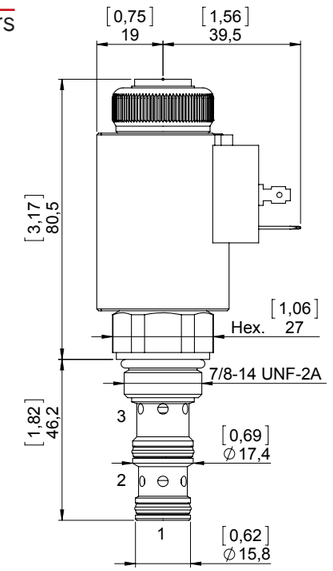

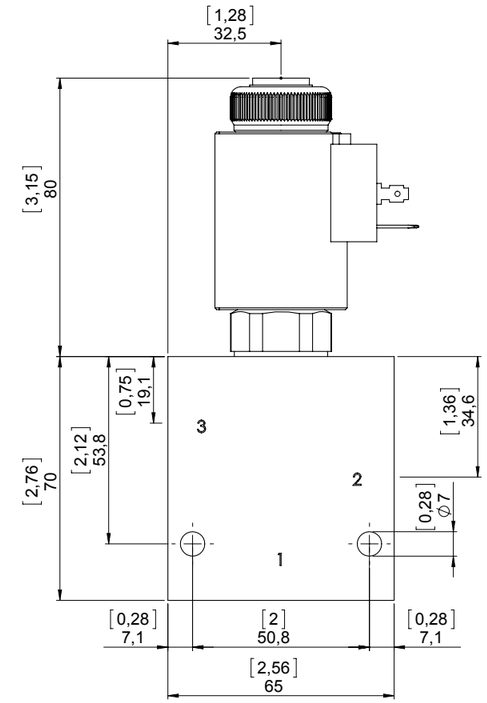

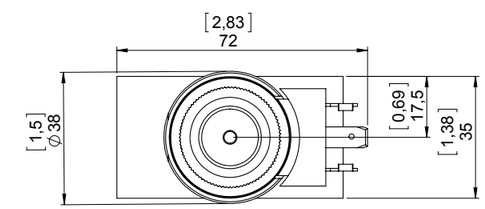

STANDARD HOUSING

Ordering code:	See page 9.03.002
Material:*	Aluminium/Steel Max working pressure for aluminum body: 210 bar Max working pressure for steel body: 350 bar

**Note:* To correctly select the material, in relation to application, see page S.003.

Ordering code

FE10PC-32 - - -

Seals
- None (std. NBR+Polyurethane)
- **Y**- Polyurethane
- For other options contact Sales dept.

*Options**
- None (std. without override)
- **S**- Screw out

Flow
- **None**- 100%
- **5**- 50%

Connector
- **DN**- Din
- **DU**- Deutsch
- **AM**- Amp Junior

Voltage
- None (std. without coil)
- **12**- Vdc
- **24**- Vdc

Material std. housing
- **A**- Aluminium
- **S**- Steel

Housing size ports
- None (std. only cartridge)
- **3B**- 3/8" BSP
- **4B**- 1/2" BSP
- **3S**- SAE 8
- **4S**- SAE 10

**Note:* Information about manual override is available at page S.001

FE12PC-32

Electro-proportional pressure compensated 3 ways flow control valve

Description

Electro proportional flow control valve 3 ways unidirectional pressure compesated, spool-type, normally closed when de-energized.

Operation mode

The valve keeps a constant flow rate out of port 3 indipendently from pressure changes in the line 3, or in the line 2.
The valve will maintain the set flow regardless of pressure variations, with increasing current applied to the solenoid, it will increase output flow.
In case of use as a 2 way bypass flow regulator in applications where the line 2 port will be blocked, bypass pressure drop will increase unless a small leakage is provided in the line 3.

GENERAL DATA

Weight without coil: 0,49 Kg (1,08 lbs).
Ambient temperature range: -30 °C a 60 °C with seals standard (NBR).
Max proof pressure: 350 bar (5.075 psi).
Flow Max: 55 l/min (14,5 gpm).
Cartridge materials: high strength steel, internal parts hardened and grinding.

Drawing

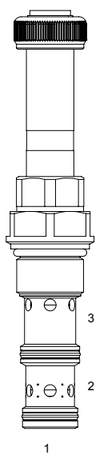

Hydraulic symbol

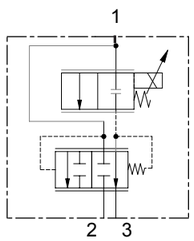

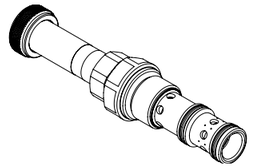

TECHNICAL DATA

HYDRAULIC

Max. working pressure:	300 bar (4.350 psi)
Flow rate:	See performance graph
Inlet flow:	90 l/min (23,8 gpm)
Fluid: *Viscosity:*	Mineral based oil From 15cSt to 250 cSt
Leakage:	200 cc/min P max. 210 bar (3.045 psi)
Standard seals:	O-ring NBR Seals Polyurethane
Cavity:	SCN1230
Installation torque:	47 Nm
Coil nut torque:	2 Nm
Max contamination level:	NAS 8 ISO 4406 19/17/14
Fluid temperature range:	From -20 to +80 °C
Seal kit std.:	5AG0042

ELECTRIC

Type of feeding:	PWM constant current
Insulation index:	H
Hysteresis:	+/- 5 %
Max current 12 Vcc:	1800 mA
Max current 24 Vcc:	900 mA
PWM:*	120 Hz
Coil code: *(see page 9.02.002)*	S190-26S

**Note:* For temperature or special conditions contact our sales department.

Priority flow vs load

Oil viscosity: 46 cSt (217 SSU) Fluid temperature: 40 °C

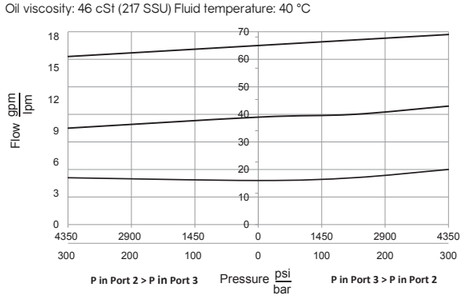

Regulated flow vs current

At imput flow 70 l/min (18,7 gpm)

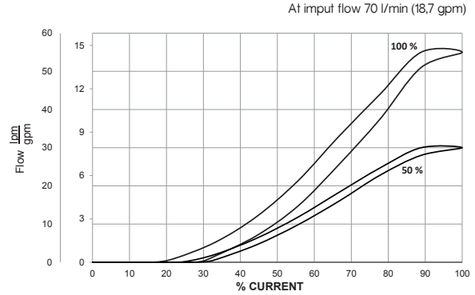

FE12PC-32

Inches
Millimeters

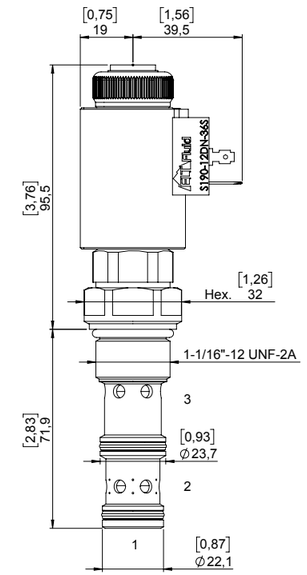

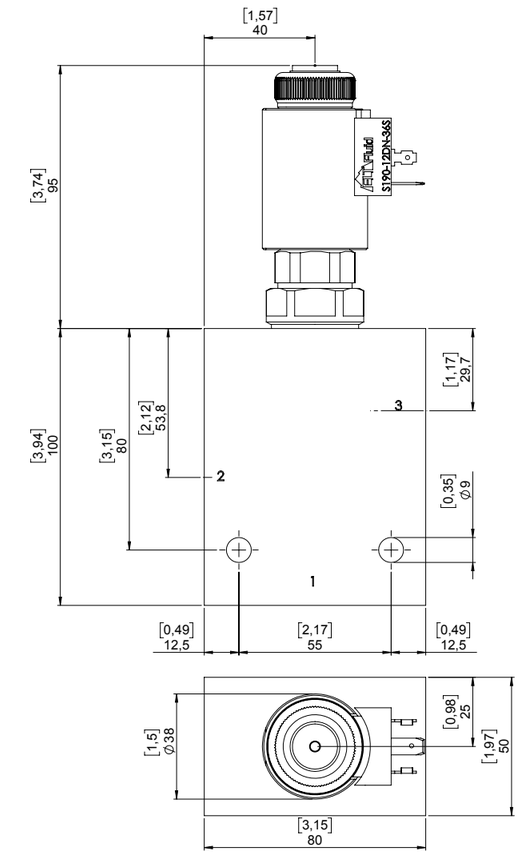

STANDARD HOUSING

Ordering code:	See page 9.04.002
Material:*	Aluminium/Steel Max working pressure for aluminum body: 210 bar Max working pressure for steel body: 350 bar

**Note:* To correctly select the material, in relation to application, see page S.003.

Ordering code

FE12PC-32 - - -

Seals
- None (std. NBR+Polyurethane)
- **Y**- Polyurethane
- For other options contact Sales dept.

*Options**
- None (std. without override)
- **S**- Screw out

Flow
- **None**- 100%
- **5**- 50%

Connector
- **DN**- Din
- **DU**- Deutsch
- **AM**- Amp Junior

Voltage
- None (std. without coil)
- **12**- Vdc
- **24**- Vdc

Material std. housing
- **A**- Aluminium
- **S**- Steel

Housing size ports
- None (std. only cartridge)
- **4B**- 1/2" BSP
- **5B**- 3/4" BSP
- **4S**- SAE 10
- **5S**- SAE 12

**Note:* Information about manual override is available at page S.001

Electric valves On-Off 1.

Electro-proportional valves 2.

Pressure control valves 3.

Flow control valves 4.

Directional control valves 5.

Load control valves 6.

Special solutions 7.

Coils Standard bodies Cavity 8. 9. 10.

Service (Emergency manual override, general conditions, technical specifications) S.

P06M-20

Relief valve, direct acting poppet type

Description

Pressure relief valve designed for application where pressure adjustment and low leakage is request. The valve can be used also as a safety device to limit the pressure of circuit.

Operation mode

The valve consist in a body, poppet and spring. Pressure is manually set by the adjustment screw. The spring pushes the poppet into the closed position. When the pressure exceeds the spring force, valve opens allowing flow from port 1 to port 2.

GENERAL DATA

Weight: 0, 069 Kg (0,15 lbs).
Ambient temperature: -30 °C a 60 °C with seals standard (NBR).
Max proof pressure: 420 bar (6.090 psi).
Flow Max: 15 l/min (4 gpm).
Cartridge materials: high strength steel, internal parts hardened and grinding.

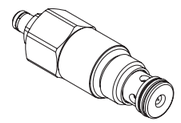

Drawing

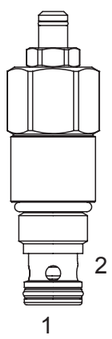

Hydraulic symbol

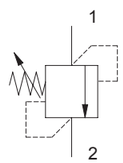

TECHNICAL DATA

HYDRAULIC	
Max. working pressure:	350 bar (5.000 psi)
Flow rate:	15 l/min (4 gpm)
Fluid: *Viscosity:*	Mineral based oil From 15cSt to 250 cSt
Leakage::*	0,75 cc/min (15 drops/min) P max. 350 bar (5.075psi)
Standard seals:	O-ring NBR Seals Poliurethane
Cavity:	SCN0620
Installation torque:	20 Nm
Installation torque nut Hex. 10:	4 Nm
Max contamination level:	NAS 8 ISO 4406 19/17/14
Fluid temperature range:	From -20 °C to +80 °C
Seals kit std.:	5AG0035

**Note:* The leakage are to be considered at a pressure equal to 80% of the setting request.

Performance graph

Oil viscosity: 46 cSt (217 SSU) Fluid temperature: 40 °C

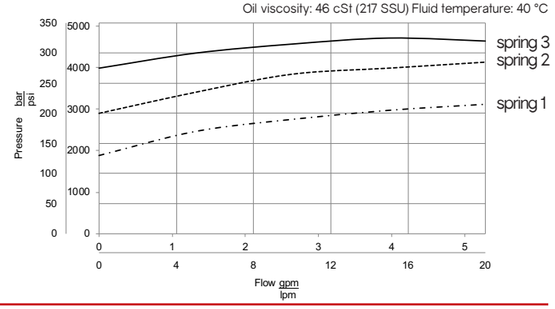

P06M-20

Inches
Millimeters

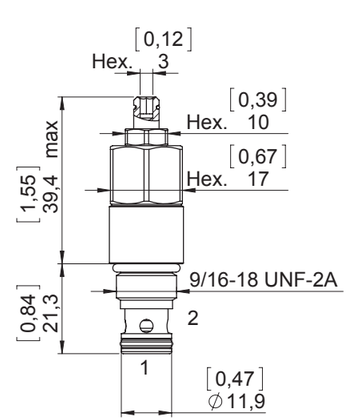

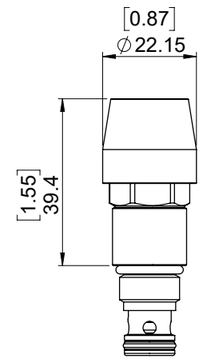

T-Tamper proof

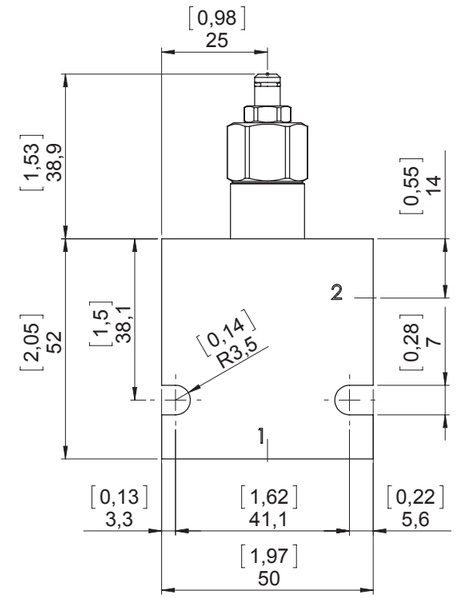

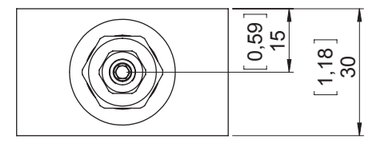

STANDARD HOUSING

Ordering code:	See page 9.01.001
Material:*	Aluminium/Steel Max working pressure for aluminum body: 210 bar Max working pressure for steel body: 350 bar

**Note:* To correctly select the material, in relation to application, see page S.003.

Ordering code

P06M-20 - -

Seals
- None (std. NBR+Polyurethane)
- **Y**- Polyurethane
- For other options contact Sales dept.

Spring setting

	Range bar-(psi)	*Pressure increase bar/turn (psi/turn)*
1	20-100 bar (290-1.450 psi)	30 bar (435 psi)
2	50-200 bar (725-2.900 psi)	65 bar (942 psi)
3	150-350 bar (2.175-5.075 psi)	100 bar (1.450 psi)

Adjustment options
- None (std. Hex socket srew)
- **T**- Tamper Proof

Valve Setting
- None (Valve not set)
- **S100**- Setting in bar (100)

Material std. housing
- **A**- Aluminium
- **S**- Steel

Housing size ports
- **2B**- 1/4" BSP
- **2S**- SAE 6

P08M-20

Relief valve, direct acting poppet type

Description

Pressure relief valve designed for application where pressure adjustment and low leakage is request. The valve can be used also as a safety device to limit the pressure of circuit.

Operation mode

The valve consist in a body, poppet and spring. Pressure is manually set by the adjustment screw. The spring pushes the poppet into the closed position. When the pressure exceeds the spring force, valve opens allowing flow from port 1 to port 2.

GENERAL DATA

Weight: 0,095 Kg (0, 022 lbs).
Ambient temperature range: -30 °C a 60 °C with seals standard (NBR).
Max proof pressure in port 2: 50 bar (725 psi).
Max proof pressure: 420 bar (6.090 psi).
Flow Max: 20 l/min (5,3 gpm).
Cartridge materials: high strength steel, internal parts hardened and grinding.

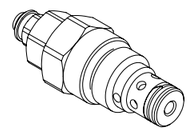

Drawing

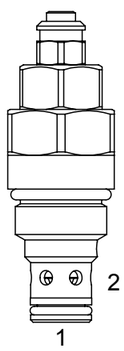

Hydraulic symbol

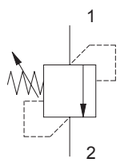

TECHNICAL DATA

HYDRAULIC	
Max. working pressure:	350 bar (5.000 psi)
Flow rate:	See performance graph
Fluid: *Viscosity:*	Mineral based oil From 15cSt to 250 cSt
Leakage::*	0,75 cc/min (15 drops/min)
Standard seals:	O-ring NBR Backup ring PTFE
Cavity:	SCN0820
Installation torque:	27 Nm
Installation torque nut Hex. 10:	4 Nm
Max contamination level:	NAS 8 ISO 4406 19/17/14
Fluid temperature range:	From -20 °C to +80 °C
Seals kit std.:	5AG0012

**Note:* The leakage are to be considered at a pressure equal to 80% of the setting request.

Performance graph

Oil viscosity: 46 cSt (217 SSU) Fluid temperature: 40 °C

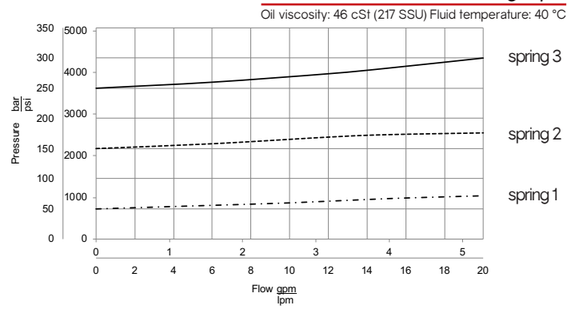

P08M-20

Inches
Millimeters

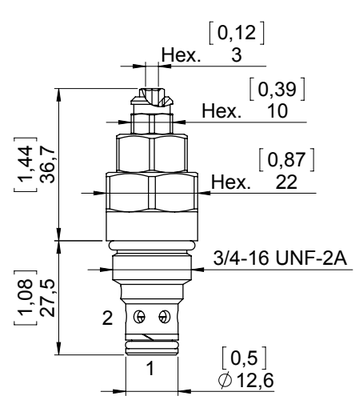

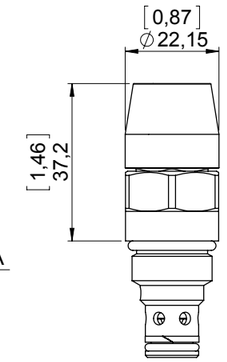

T-Tamper proof

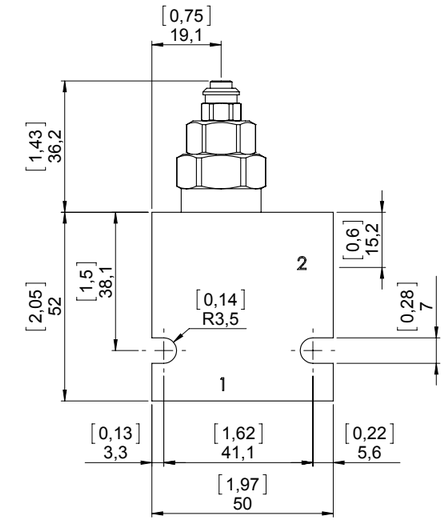

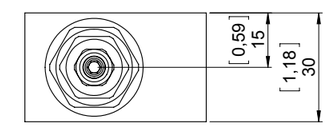

STANDARD HOUSING

Ordering code:	See page 9.02.001
Material:*	Aluminium/Steel Max working pressure for aluminum body: 210 bar Max working pressure for steel body: 350 bar

**Note:* To correctly select the material, in relation to application, see page S.003.

Ordering code

P08M-20 - - - -

Seals
- None (std. NBR)
- **Y**- Polyurethane
- For other options contact Sales dept.

Spring setting

	Range bar-(psi)	*Pressure increase bar/turn (psi/turn)*
1	20-100 bar (290-1.450 psi)	30 bar (435 psi)
2	50-200 bar (725-2.900 psi)	80 bar (1.160 psi)
3	150-350 bar (2.175-5.075 psi)	130 bar (1.885 psi)

Adjustment options
- None (std. Hex socket srew)
- **T**- Tamper Proof

*Valve Setting**
- None (Valve not set)
- **S100**- Setting in bar (100)

Material std. housing
- **A**- Aluminium
- **S**- Steel

Housing size ports
- None (std. only cartridge)
- **2B**- 1/4" BSP
- **3B**- 3/8" BSP
- **2S**- SAE 6
- **3S**- SAE 8

**Note:* Settings are performed at a flow rate of 4 l/min.

P081M-20

Relief valve, direct acting poppet type

Description

Pressure relief valve designed for application where pressure adjustment and low leakage is requested. The valve can be used also as a safety device to limit the pressure of circuit.

Operation mode

The valve consist in a body, poppet and spring. Pressure is manually set by the adjustment screw. The spring pushes the poppet into the closed position. When the pressure exceeds the spring force, valve opens allowing flow from port 1 to port 2.

GENERAL DATA

Weight: 0,095 Kg (0, 022 lbs).
Ambient temperature range: -30 °C a 60 °C with seals standard (NBR).
Max proof pressure: 420 bar (6.090 psi).
Flow Max: 30 l/min (8 gpm).
Cartridge materials: high strength steel, internal parts hardened and grinding.

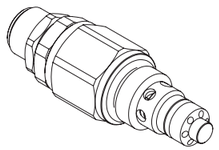

Drawing

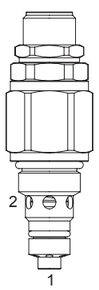

Hydraulic symbol

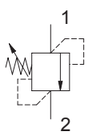

TECHNICAL DATA

HYDRAULIC	
Max. working pressure:	350 bar (5.000 psi)
Flow rate:	See performance graph
Fluid: *Viscosity:*	Mineral based oil From 15cSt to 250 cSt
Leakage:*	0,75 cc/min (15 drops/min)
Standard seals:	O-ring NBR Polyurethane
Cavity:	SCN0821
Installation torque:	40 Nm
Installation torque nut Hex. 10:	4 Nm
Max contamination level:	NAS 8 ISO 4406 19/17/14
Fluid temperature range:	From -20 °C to +80 °C
Seals kit std.:	5AG0023

**Note:* The leakage are to be considered at a pressure equal to 80% of the setting request.

Performance graph

Oil viscosity: 46 cSt (217 SSU) Fluid temperature: 40 °C

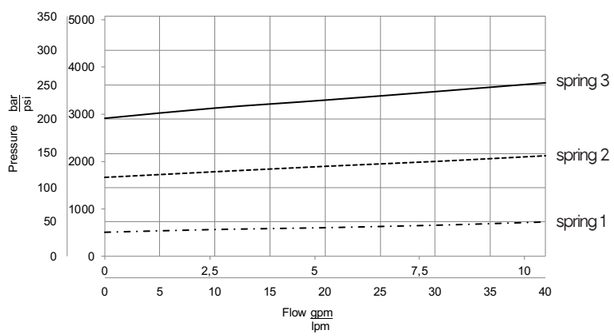

P081M-20

Inches
Millimeters

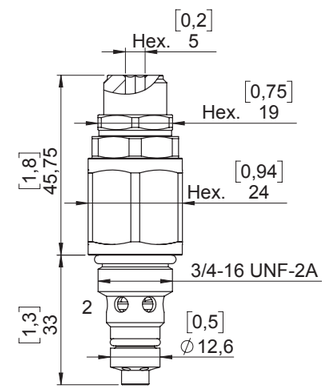

STANDARD HOUSING

Ordering code:	See page 9.02.001
Material:*	Aluminium/Steel Max working pressure for aluminum body: 210 bar Max working pressure for steel body: 350 bar

**Note:* To correctly select the material, in relation to application, see page S.003.

Ordering code

P081M-20 - -

Seals

- None (std. NBR)
- **Y**- Polyurethane
- For other options contact Sales dept.

Spring setting

	Range bar-(psi)	*Pressure increase bar/turn (psi/turn)*
0	5-30 bar (72-435 psi)	10 bar (145 psi)
1	20-100 bar (290-1.450 psi)	30 bar (435 psi)
2	50-200 bar (725-2.900 psi)	80 bar (1.160 psi)
3	150-350 bar (2.175-5.075 psi)	130 bar (1.885 psi)

Valve Setting*

- None (Valve not set)
- **S100**- Setting in bar (100)

**Note:* Settings are performed at a flow rate of 4 l/min.

P08M-21

Relief valve, direct acting, differential area, poppet type

Description

Pressure relief valve direct acting differential area, designed for application where good performance of pressure increase vs flow and pressure adjustment is requested. The valve can be used also as a safety device to limit the pressure of the circuit.

Operation mode

The valve consist in a body, poppet and spring. Pressure is manually set by the adjustment screw. The spring pushes the pilot stage into the closed position. When the pressure exceeds the spring force, valve opens allowing flow from port 2 to 1.

GENERAL DATA

Weight: 0,094 Kg (0,2 lbs).
Ambient temperature range: -30 °C a 60 °C with seals standard (NBR).
Max proof pressure in port 1: 50 bar (725 psi).
Max proof pressure: 420 bar (6.090 psi).
Flow Max: 30 l/min (7,9 gpm).
Cartridge materials: high strength steel, internal parts hardened and grinding.

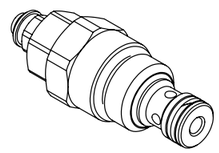

Drawing

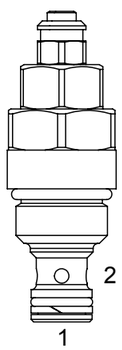

Hydraulic symbol

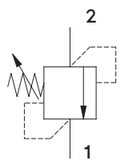

TECHNICAL DATA

HYDRAULIC	
Max. working pressure:	350 bar (5.000 psi)
Flow rate:	See performance graph
Fluid: *Viscosity:*	Mineral based oil From 15cSt to 250 cSt
Leakage::*	0,75 cc/min (15 drops/min)
Standard seals:	O-ring NBR Backup ring PTFE
Cavity:	SCN0820
Installation torque:	27 Nm
Installation torque nut Hex. 10:	4 Nm
Max contamination level:	NAS 8 ISO 4406 19/17/14
Fluid temperature range:	From -20 °C to +80 °C
Seals kit std.:	5AG0024

**Note:* The leakage are to be considered at a pressure equal to 80% of the setting request.

Performance graph

Oil viscosity: 46 cSt (217 SSU) Fluid temperature: 40 °C

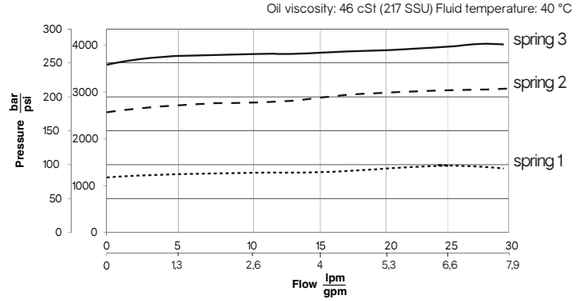

P08M-21

Inches
Millimeters

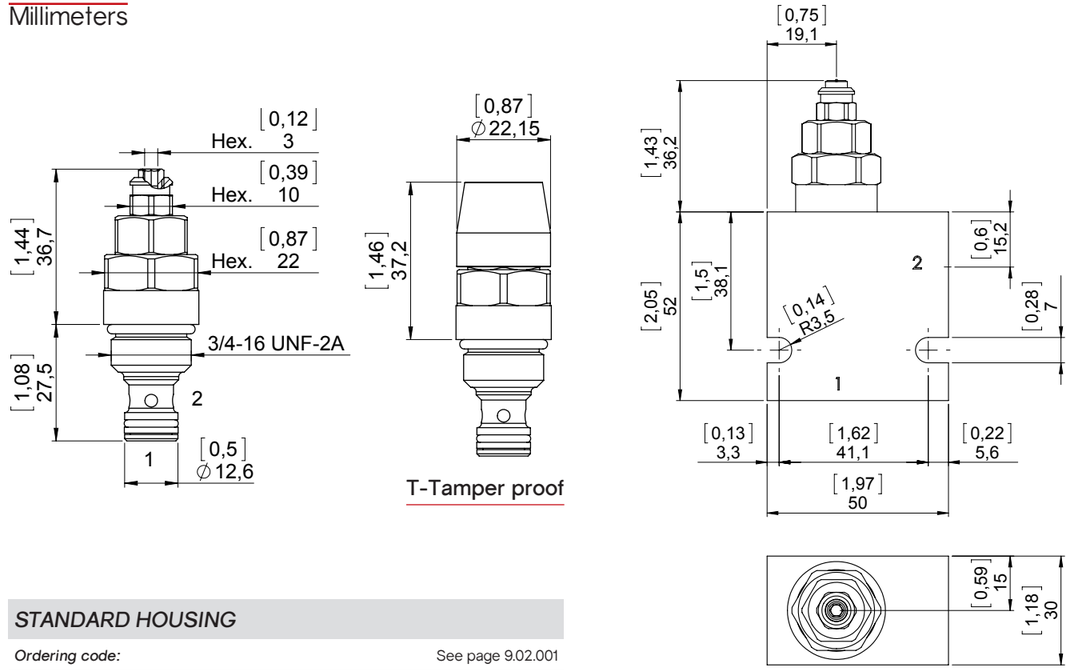

STANDARD HOUSING

Ordering code:	See page 9.02.001
Material:*	Aluminium/Steel Max working pressure for aluminum body: 210 bar Max working pressure for steel body: 350 bar

**Note:* To correctly select the material, in relation to application, see page S.003.

Ordering code

P08M-21 - - - -

Seals
- None (std. NBR)
- **Y**- Polyurethane
- For other options contact Sales dept.

Spring setting

	Range bar-(psi)	*Pressure increase bar/turn (psi/turn)*
1	20-100 bar (290-1.450 psi)	30 bar (435 psi)
2	50-200 bar (725-2.900 psi)	80 bar (1.160 psi)
3	150-350 bar (2.175-5.075 psi)	150 bar (2.175 psi)

Adjustment options
- None (std. Hex socket srew)
- **T**- Tamper Proof

*Valve Setting**
- None (Valve not set)
- **S100**- Setting in bar (100)

Material std. housing
- **A**- Aluminium
- **S**- Steel

Housing size ports
- None (std. only cartridge)
- **2B**- 1/4" BSP
- **3B**- 3/8" BSP
- **2S**- SAE 6
- **3S**- SAE 8

**Note:* Settings are performed at a flow rate of 4 l/min.

P10M-21

Relief valve, direct acting, differential area, poppet type

Description

Pressure relief valve direct acting differential area, designed for application where good performance of pressure increase vs flow and pressure adjustment is requested. The valve can be used also as a safety device to limit the pressure of the circuit.

Operation mode

The valve consist in a body, poppet and spring. Pressure is manually set by the adjustment screw. The spring pushes the pilot stage into the closed position. When the pressure exceeds the spring force, valve opens allowing flow from port 2 to 1.

GENERAL DATA

Weight: 0,19 Kg (0,42 lbs).
Ambient temperature range: -30 °C a 60 °C with seals standard (NBR).
Max proof pressure in port 1: 50 bar (725 psi).
Max proof pressure: 420 bar (6.090 psi).
Flow Max: 70 l/min (18,5 gpm).
Cartridge materials: high strength steel, internal parts hardened and grinding.

Drawing

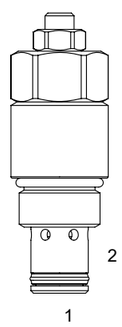

Hydraulic symbol

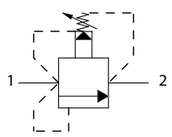

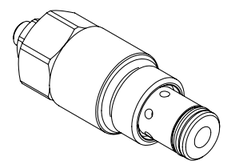

TECHNICAL DATA

HYDRAULIC

Max. working pressure:	350 bar (5.000 psi)
Flow rate:	See performance graph
Fluid: *Viscosity:*	Mineral based oil From 15cSt to 250 cSt
Leakage::*	0,5 cc/min
Standard seals:	O-ring NBR Backup ring PTFE
Cavity:	SCN1020
Installation torque:	45 Nm
Installation torque nut Hex 10:	4 Nm
Max contamination level:	NAS 8 ISO 4406 19/17/14
Fluid temperature range:	From -20 °C to +80 °C
Seals kit std.:	5AG0026

**Note:* The leakage are to be considered at a pressure equal to 80% of the setting request.

Performance graph

Oil viscosity: 46 cSt (217 SSU) Fluid temperature: 40 °C

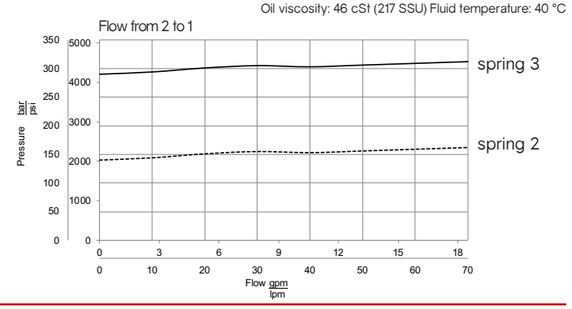

P10M-21

Inches
Millimeters

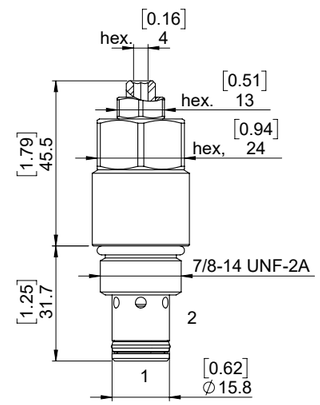

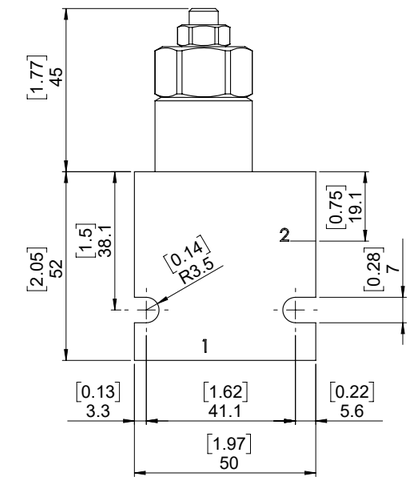

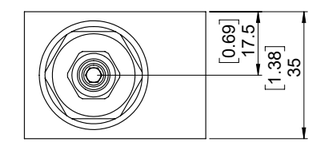

STANDARD HOUSING

Ordering code:	See page 9.03.001
Material:*	Aluminium/Steel Max working pressure for aluminum body: 210 bar Max working pressure for steel body: 350 bar

**Note:* To correctly select the material, in relation to application, see page S.003.

Ordering code

P10M-21 - - - -

Seals
- None (std. NBR+Polyurethane)
- **Y**- Polyurethane
- For other options contact Sales dept.

Spring setting

	Range bar-(psi)	Pressure increase bar/turn (psi/turn)
2	50-200 bar (725-2.900 psi)	45 bar (657 psi)
3	180-350 bar (2.175-5.075 psi)	80 bar (1.160 psi)

Adjustment options
- None (std. Hex socket srew)

*Valve Setting**
- None (Valve not set)
- **S100**- Setting in bar (100)

Material std. housing
- **A**- Aluminium
- **S**- Steel

Housing size ports
- None (std. only cartridge)
- **3B**- 3/8" BSP
- **4B**- 1/2" BSP
- **3S**- SAE 8
- **4S**- SAE 10

**Note:* Settings are performed at a flow rate of 4 l/min.

P10M-22

Relief valve, pilot operated, spool type

Description

Pressure relief valve pilot operated, designed for application where good performance of pressure increase vs flow and pressure adjustment is requested. The valve can be used also as a safety device to limit the pressure of the circuit.

Operation mode

The valve consist in a logic element with a pilot stage poppet and spring. Pressure is manually set by the adjustment screw. The spring pushes the pilot stage into the closed position. When the pressure exceeds the spring force, valve opens allowing flow from port 1 to 2.

GENERAL DATA

Weight: 0,19 Kg (0,4 lbs).
Ambient temperature range: -30 °C a 60 °C with seals standard (NBR).
Max proof pressure in port 2: 50 bar (725 psi).
Max proof pressure: 420 bar (6.090 psi).
Flow Max: 100 l/min (26,4 gpm).
Cartridge materials: high strength steel, internal parts hardened and grinding.

Drawing

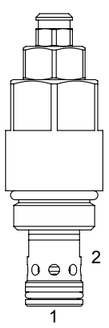

Hydraulic symbol

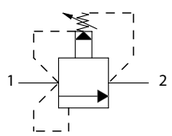

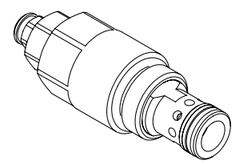

TECHNICAL DATA

HYDRAULIC

Max. working pressure:	350 bar (5.000 psi)
Flow rate:	See performance graph
Fluid: *Viscosity:*	Mineral based oil From 15cSt to 250 cSt
Leakage::*	200 cc/min
Standard seals:	O-ring NBR Backup ring PTFE
Cavity:	SCN1020
Installation torque:	35 Nm
Installation torque nut Hex 10:	4 Nm
Max contamination level:	NAS 8 ISO 4406 19/17/14
Fluid temperature range:	From -20 °C to +80 °C
Seals kit std.:	5AG0020

**Note:* The leakage are to be considered at a pressure equal to 80% of the setting request.

Performance graph

Oil viscosity: 46 cSt (217 SSU) Fluid temperature: 40 °C

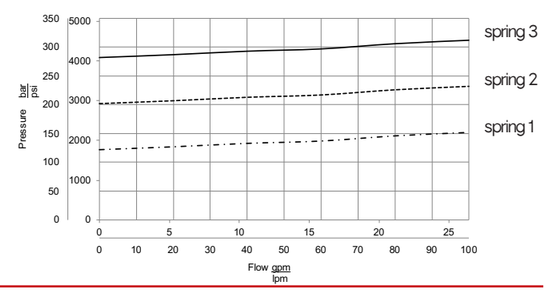

P10M-22

Inches
Millimeters

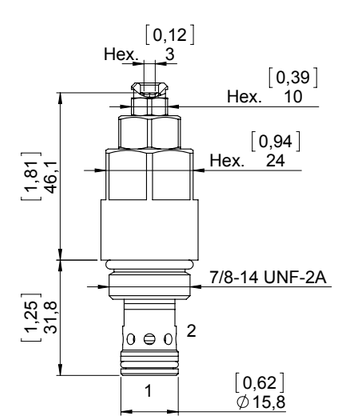

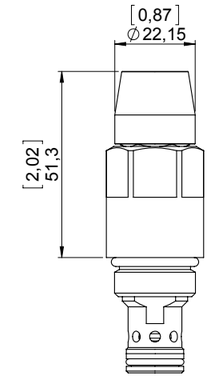

T-Tamper proof

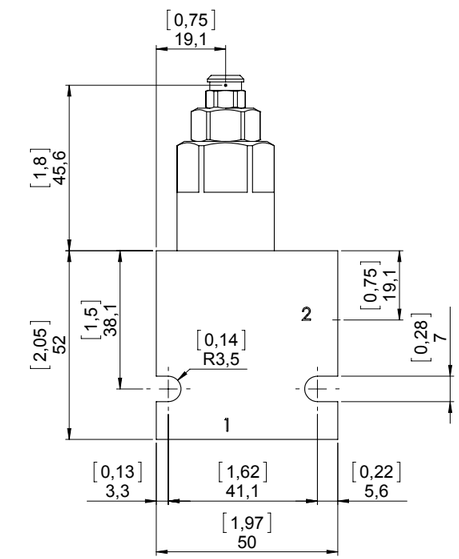

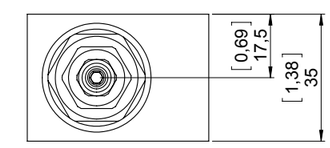

STANDARD HOUSING

Ordering code:	See page 9.03.001
Material:*	Aluminium/Steel Max working pressure for aluminum body: 210 bar Max working pressure for steel body: 350 bar

**Note:* To correctly select the material, in relation to application, see page S.003.

Ordering code

P10M-22 - - - -

Seals
- None (std. NBR)
- **Y**- Polyurethane
- For other options contact Sales dept.

Spring setting

	Range bar-(psi)	Pressure increase bar/turn (psi/turn)
1	10-100 bar (145-1.450 psi)	35 bar (507 psi)
2	50-200 bar (725-2.900 psi)	80 bar (1.160 psi)
3	100-350 bar (2.175-5.075 psi)	150 bar (2.175 psi)

Adjustment options
- None (std. Hex socket srew)
- **T**- Tamper Proof

*Valve Setting**
- None (Valve not set)
- **S100**- Setting in bar (100)

Material std. housing
- **A**- Aluminium
- **S**- Steel

Housing size ports
- None (std. only cartridge)
- **3B**- 3/8" BSP
- **4B**- 1/2" BSP
- **3S**- SAE 8
- **4S**- SAE 10

**Note:* Settings are performed at a flow rate of 4 l/min.

P10M-23

Bi-directional relief valve, direct acting, differential area, poppet type

Description

Pressure relief valve Bi-Directional cartridge, direct-acting, differential area, poppet-type, designed to protect both lines by relieving oil to the other line.

Operation mode

The valve consist in a single cartridge, dual cross-over relief valve. Pressure is manually set by the adjustment screw. When pressure on port 1 or 2 exceeds spring force , the valve open allowing flow from 2 to 1 or 1 to 2.

GENERAL DATA

Weight: 0,19 Kg (0,41 lbs).
Ambient temperature: -30 °C a 60 °C with seals standard (NBR).
Max proof pressure: 420 bar (6.090 psi).
Flow Max: 70l/min (18,7 gpm).
Cartridge materials: high strength steel, internal parts hardened and grinding.

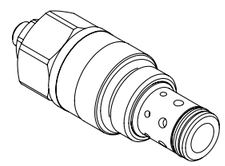

Drawing

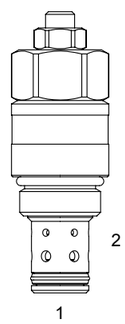

Hydraulic symbol

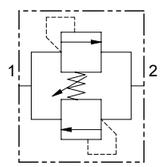

TECHNICAL DATA

HYDRAULIC	
Max. working pressure:	350 bar (5.000 psi)
Flow rate:	70 l/min (18,6 gpm)
Fluid: *Viscosity:*	Mineral based oil From 15cSt to 250 cSt
Leakage::*	5 cc/min P max. 350 bar (5.075 psi)
Standard seals:	O-ring NBR Seals Polyurethane
Cavity:	SCN1020
Installation torque:	45 Nm
Installation torque nut Hex. 13:	10 Nm
Max contamination level:	NAS 8 ISO 4406 19/17/14
Fluid temperature range:	From -20 °C to +80 °C
Seals kit std.:	5AG0026

**Note:* The leakage are to be considered at a pressure equal to 80% of the setting request.

Performance graph

Oil viscosity: 46 cSt (217 SSU) Fluid temperature: 40 °C

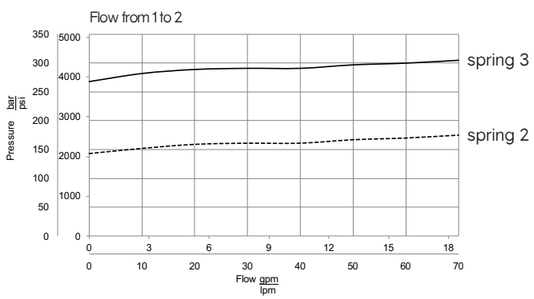

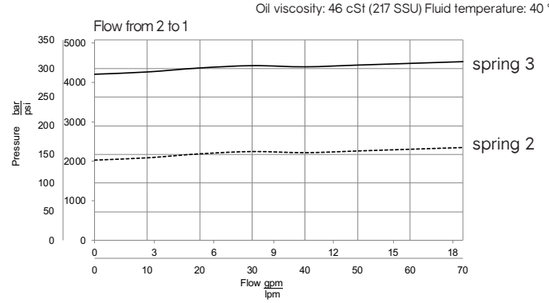

P10M-23

Inches
Millimeters

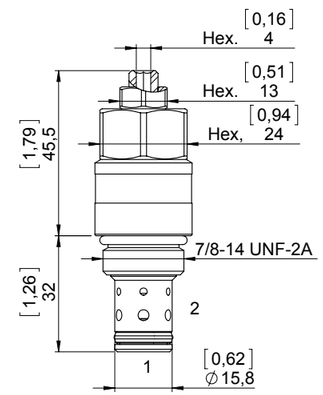

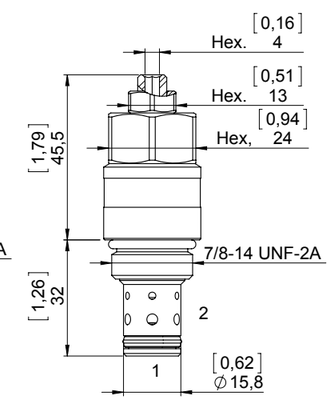

T-Tamper proof

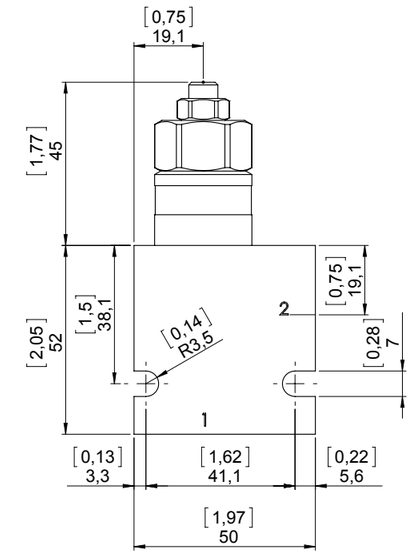

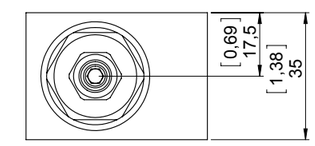

STANDARD HOUSING

Ordering code:	See page 9.03.001
Material:*	Aluminium/Steel Max working pressure for aluminum body: 210 bar Max working pressure for steel body: 350 bar

**Note:* To correctly select the material, in relation to application, see page S.003.

Ordering code

P10M-23 - - - -

Seals
- None (std. NBR+Polyurethane)
- **Y**- Polyurethane
- For other options contact Sales dept.

Spring setting

	Range bar-(psi)	*Pressure increase bar/turn (psi/turn)*
2	50-200 bar (725-2.900 psi)	45 bar (657 psi)
3	180-350 bar (2.175-5.075 psi)	80 bar (1.160 psi)

Adjustment options
- None (std. Hex socket srew)
- **T**- Tamper Proof

*Valve Setting**
- None (Valve not set)
- **S100**- Setting in bar (100)

Material std. housing
- **A**- Aluminium
- **S**- Steel

Housing size ports
- None (std. only cartridge)
- **3B**- 3/8" BSP
- **4B**- 1/2" BSP
- **3S**- SAE 8
- **4S**- SAE 10

**Note:* Settings are performed at a flow rate of 4 l/min.

P08R-32

Pressure reducing and relieving valve, differential area, spool type with Hydrodynamic Damping

Description

Pressure reducing and relieving valve, differential area, spool type, which can be adjusted across a prescribed range by changing the spring load. Designed for use as a pressure-limiting device in demanding applications.

Operation mode

Flow is allowed to pass from port 2 to 1 till the pressure in port 1 exceed the pressure setting, the spool of the valve acts to restrict the inlet flow at port 2, in order to keep constant the pressure value at 1. If pressure at 1 exceeds the setting induced by the spring, pressure from 1 is relieved to 3. The Hydrodynamic Damping ensures excellent stability through the entire flow and pressure range.

GENERAL DATA

Weight: 0,205 Kg (0,45 lbs).
Ambient temperature range: -30 °C a 60 °C with seals standard (NBR).
Max proof pressure: 350 bar (5.075 psi).
Flow Max: 12 l/min (3,17 gpm).
Cartridge materials: high strength steel, internal parts hardened and grinding.

Drawing

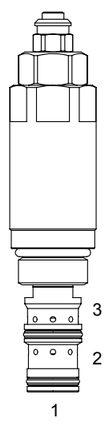

Hydraulic symbol

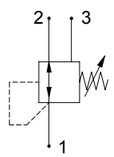

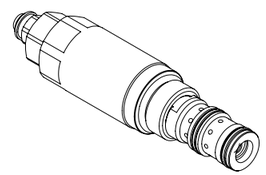

TECHNICAL DATA

HYDRAULIC

Max. pressure reduced in 1:	210 bar (3046 psi)
Max. working pressure in 2:	350 bar (5.000 psi)
Max. working pressure in 3:	25 bar (362 psi) *[pressure on port 3 to be added to setting value]*
Flow rate:	See performance graph
Fluid: *Viscosity:*	Mineral based oil From 15cSt to 250 cSt
Leakage::*	100 cc/min P max. 350 bar (5.000 psi)
Standard seals:	O-ring NBR Seals Polyurethane
Cavity:	SCN0830
Installation torque:	27 Nm
Installation torque nut Hex 10:	4 Nm
Max contamination level:	NAS 8 ISO 4406 19/17/14
Fluid temperature range:	From -20 °C to +80 °C
Seals kit std.:	5AG0021

**Note:* The leakage are to be considered at a pressure equal to 80% of the setting request.

Performance graph

Oil viscosity: 46 cSt (217 SSU) Fluid temperature: 40 °C

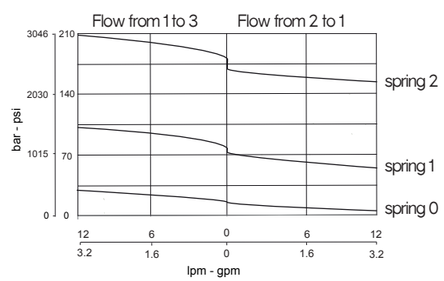

P08R-32

Inches
Millimeters

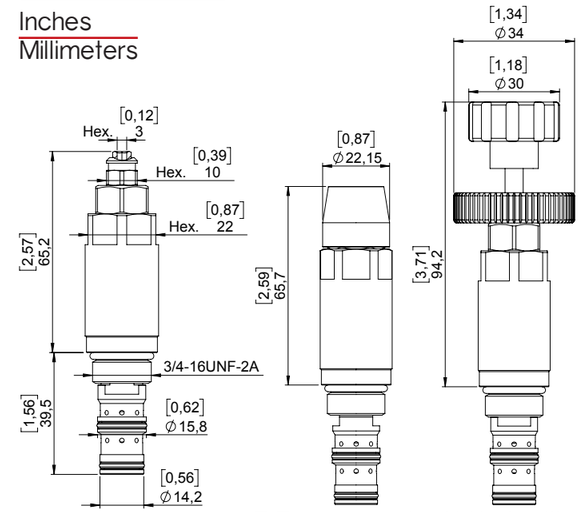

T-Tamper proof

H-Knob with locking wheel

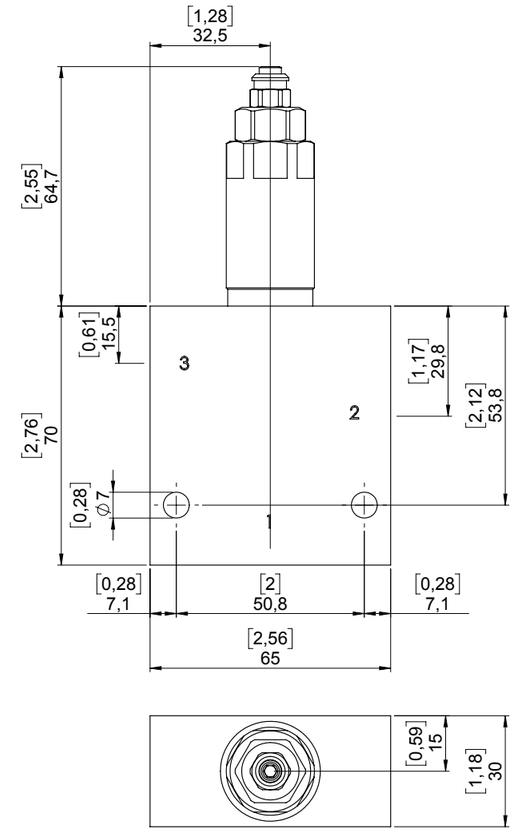

STANDARD HOUSING

Ordering code:	See page 9.02.002
Material:*	Aluminium/Steel Max working pressure for aluminum body: 210 bar Max working pressure for steel body: 350 bar

**Note:* To correctly select the material, in relation to application, see page S.003.

Ordering code

P08R-32 - - - - -

Seals
- None (std. NBR+Polyurethane)
- **Y**- Polyurethane
- For other options contact Sales dept.

Spring setting

	Range bar-(psi)	*Pressure increase bar/turn (psi/turn)*
0	5-30 bar (72-435 psi)	10 bar (145 psi)
1	20-100 bar (290-1.450 psi)	30 bar (435 psi)
2	50-210 bar (725-2.900 psi)	80 bar (1.160 psi)

Adjustment options
- None (std. Hex socket srew)
- **T**- Tamper Proof
- **H** - Knob with locking wheel

*Valve Setting**
- None (Valve not set)
- **S100**- Setting in bar (100)

Material std. housing
- **A**- Aluminium
- **S**- Steel

Housing size ports
- None (std. only cartridge)
- **2B**- 1/4" BSP
- **3B**- 3/8" BSP
- **2S**- SAE 6
- **3S**- SAE 8

**Note:* Settings are performed at a flow rate of 4 l/min.

P10R-31

Pressure reducing and relieving valve, pilot operated, spool type

Description

Pressure reducing and relieving valve, pilot operated, spool type, which can be adjusted across a prescribed range by changing the spring load. Designed for use as a pressure-limiting device in demanding applications.

Operation mode

Flow is allowed to pass from port 2 to 1, till the pressure in port 1 exceed the pressure setting, the spool of the valve acts to restrict the inlet flow at port 2, in order to keep constant the pressure value at 1. If pressure at 1 exceeds the setting induced by the spring, pressure from 1 is relieved to 3.

GENERAL DATA

Weight: 0,17 Kg (0,37 lbs).
Ambient temperature range: -20 °C a 80 °C with seals standard (NBR).
Max proof pressure: 300 bar (4.350 psi).
Flow Max: 50 l/min (13,2 gpm).
Cartridge materials: high strength steel, internal parts hardened and grinding.

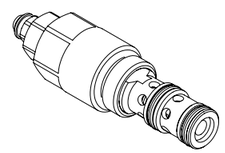

TECHNICAL DATA

HYDRAULIC

Max. pressure reduced in 1:	250 bar (3.625 psi)
Max. working pressure in 2:	300 bar (3.351 psi)
Max. working pressure in 3:	25 bar (362 psi) *[pressure on port 3 to be added to setting value]*
Flow rate:	See performance graph
Fluid: *Viscosity:*	Mineral based oil From 15cSt to 250 cSt
Leakage:*	200 cc/min P max. 350 bar (5.000 psi)
Standard seals:	O-ring NBR Seals Polyurethane
Cavity:	SCN1030
Installation torque:	40 Nm
Installation torque nut Hex 10:	4 Nm
Max contamination level:	NAS 8 ISO 4406 19/17/14
Fluid temperature range:	From -20 °C to +80 °C
Seals kit std.:	5AG0017

**Note:* The leakage are to be considered at a pressure equal to 80% of the setting request.

Drawing

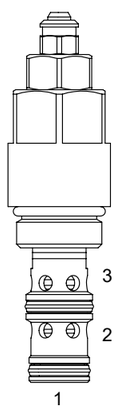

Hydraulic symbol

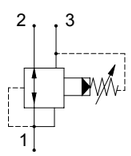

Performance graph

Oil viscosity: 46 cSt (217 SSU) Fluid temperature: 40 °C

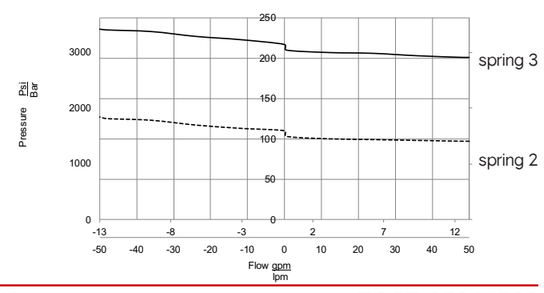

P10R-31

Inches
Millimeters

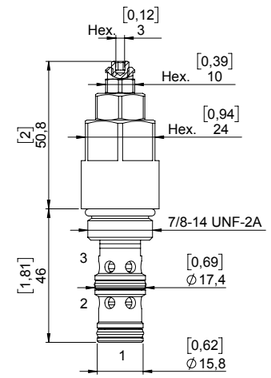

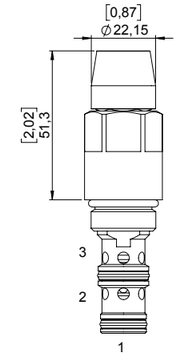

T-Tamper proof

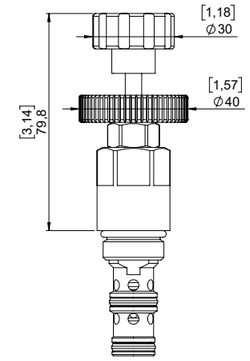

H-Knob with locking wheel

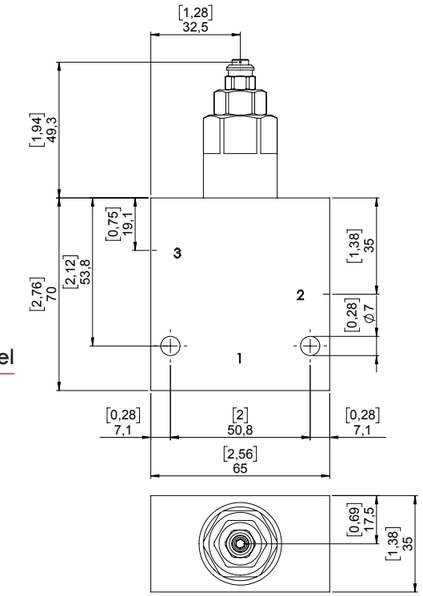

STANDARD HOUSING

Ordering code:	See page 9.03.002
Material:*	Aluminium/Steel Max working pressure for aluminum body: 210 bar Max working pressure for steel body: 350 bar

**Note:* To correctly select the material, in relation to application, see page S.003.

Ordering code

P10R-31 - - - -

Seals
- None (std. NBR+Polyurethane)
- **Y**- Polyurethane
- For other options contact Sales dept.

Spring setting

	Range bar-(psi)	*Pressure increase bar/turn (psi/turn)*
0	8-40 bar (116-580 psi)	10 bar (145 psi)
1	20-100 bar (290-1450 psi)	30 bar (435 psi)
2	50-200 bar (725-2.900 psi)	80 bar (1.160 psi)

Adjustment options
- None (std. Hex socket srew)
- **T**- Tamper Proof
- **H** - Knob with locking wheel

*Valve Setting**
- None (Valve not set)
- **S100**- Setting in bar (100)

Material std. housing
- **A**- Aluminium
- **S**- Steel

Housing size ports
- None (std. only cartridge)
- **3B**- 3/8" BSP
- **4B**- 1/2" BSP
- **3S**- SAE 8
- **4S**- SAE 10

**Note:* Settings are performed at a flow rate of 4 l/min.

P10R-32

Pressure reducing and relieving valve, differential area, spool type with Hydrodynamic Damping

Description

Pressure reducing and relieving valve, differential area, spool type, which can be adjusted across a prescribed range by changing the spring load. Designed for use as a pressure-limiting device in demanding applications.

Operation mode

Flow is allowed to pass from port 2 to 1, till the pressure in port 1 exceed the pressure setting, the spool of the valve acts to restrict the inlet flow at port 2, in order to keep constant the pressure value at 1. If pressure at 1 exceeds the setting induced by the spring, pressure from 1 is relieved to 3.
The Hydrodynamic Damping ensures excellent stability through the entire flow and pressure range.

GENERAL DATA

Weight: 0,28 Kg (0,62 lbs).
Ambient temperature range: -30 °C a 60 °C with seals standard (NBR).
Max proof pressure: 300 bar (4.350 psi).
Flow Max: 30 l/min (7,93 gpm).
Cartridge materials: high strength steel, internal parts hardened and grinding.

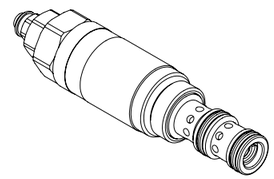

Drawing

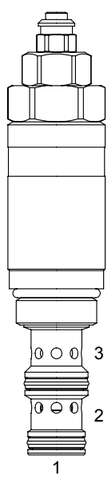

Hydraulic symbol

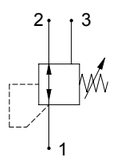

TECHNICAL DATA

HYDRAULIC

Max. pressure reduced in 1:	210 bar (3046 psi)
Max. working pressure in 2:	350 bar (5.000 psi)
Max. working pressure in 3:	25 bar (362 psi) *[pressure on port 3 to be added to setting value]*
Flow rate:	See performance graph
Fluid: *Viscosity:*	Mineral based oil From 15cSt to 250 cSt
Leakage::*	150 cc/min P max. 350 bar (5.000 psi)
Standard seals:	O-ring NBR Seals Polyurethane
Cavity:	SCN1030
Installation torque:	33 Nm
Installation torque nut Hex 10:	4 Nm
Max contamination level:	NAS 8 ISO 4406 19/17/14
Fluid temperature range:	From -20 °C to +80 °C
Seals kit std.:	5AG0017

Note: The leakage are to be considered at a pressure equal to 80% of the setting request.

Performance graph

Oil viscosity: 46 cSt (217 SSU) Fluid temperature: 40 °C

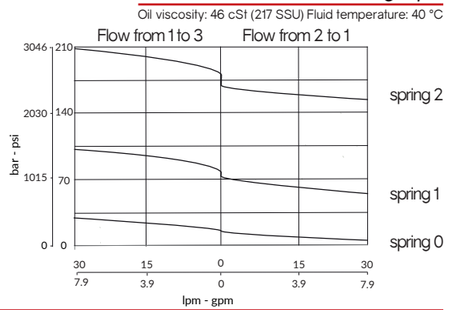

P10R-32

Inches
Millimeters

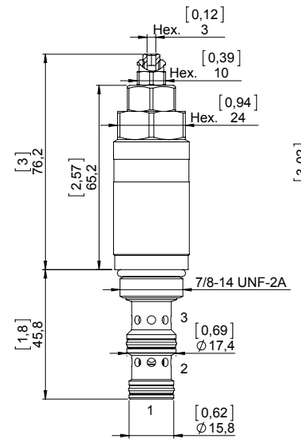

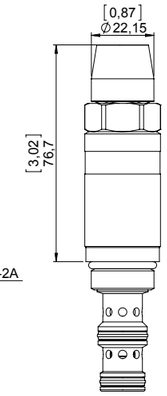

T-Tamper proof

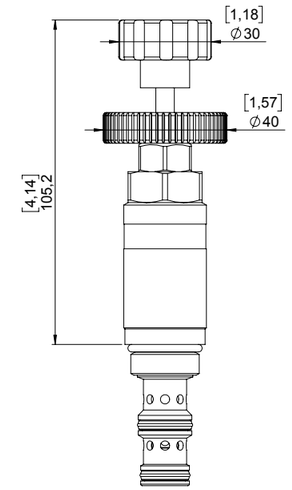

H-Knob with locking wheel

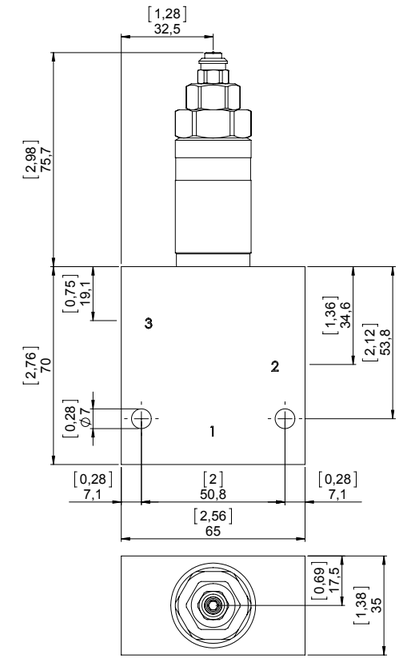

STANDARD HOUSING

Ordering code:	See page 9.03.002
Material:*	Aluminium/Steel Max working pressure for aluminum body: 210 bar Max working pressure for steel body: 350 bar

Note: To correctly select the material, in relation to application, see page S.003.

Ordering code

P10R-32 - - - -

Seals
- None (std. NBR+Polyurethane)
- **Y**- Polyurethane
- For other options contact Sales dept.

Spring setting

	Range bar-(psi)	*Pressure increase bar/turn (psi/turn)*
0	8-40 bar (116-580 psi)	10 bar (145 psi)
1	20-100 bar (290-1.450 psi)	30 bar (435 psi)
2	40-180 bar (580-2.610 psi)	80 bar (1.160 psi)

Adjustment options
- None (std. Hex socket srew)
- **T**- Tamper Proof
- **H** - Knob with locking wheel

Valve Setting*
- None (Valve not set)
- **S100**- Setting in bar (100)

Material std. housing
- **A**- Aluminium
- **S**- Steel

Housing size ports
- None (std. only cartridge)
- **3B**- 3/8" BSP
- **4B**- 1/2" BSP
- **3S**- SAE 8
- **4S**- SAE 10

Note: Settings are performed at a flow rate of 4 l/min.

P10S-35

Sequence valve, direct acting, normally closed, internal pilot

Description

Direct acting sequence valves designed for application where is required to divert oil to a second circuit at a predetermined pressure.

Operation mode

In normal condition port 2 is open to the tank via port 3 and port 1 is blocked, when the pressure on port 1 exceeds the pressure setting the spool of the valve will opens port 1 to port 2 and port 3 is blocked but must stay always connected to tank.

GENERAL DATA

Weight: 0,32 Kg (0,7 lbs).
Ambient temperature: -30 °C a 60 °C with seals standard (NBR).
Max proof pressure: 300 bar (4.350 psi).
Flow Max: 30l/min (7,9 gpm).
Cartridge materials: high strength steel, internal parts hardened and grinding.

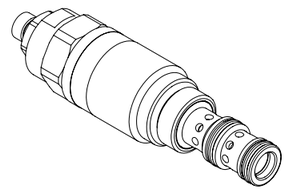

Drawing

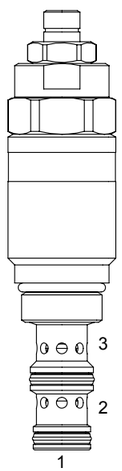

Hydraulic symbol

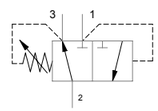

TECHNICAL DATA

HYDRAULIC

Max. pressure:	210 bar (3046 psi)
Flow rate:	30 l/min (7,9 gpm)
Fluid: *Viscosity:*	Mineral based oil From 15cSt to 250 cSt
Leakage::*	150 cc/min P max. 350 bar (5.000 psi)
Standard seals:	O-ring NBR Seals Polyurethane
Cavity:	SCN1030
Installation torque:	33 Nm
Installation torque nut Hex 17:	10 Nm
Max contamination level:	NAS 8 ISO 4406 19/17/14
Fluid temperature range:	From -20 to +80 °C
Seals kit std.:	5AG0017

**Note:* The leakage are to be considered at a pressure equal to 80% of the setting request.

Performance graph

Oil viscosity: 46 cSt (217 SSU) Fluid temperature: 40 °C

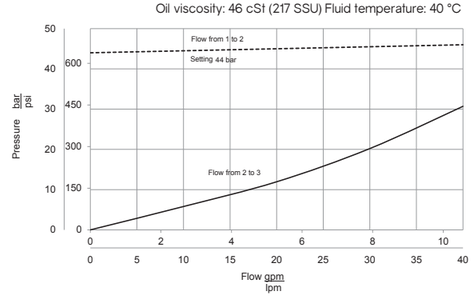

P10S-35

Inches
Millimeters

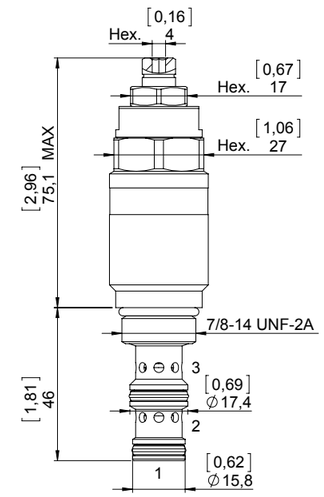

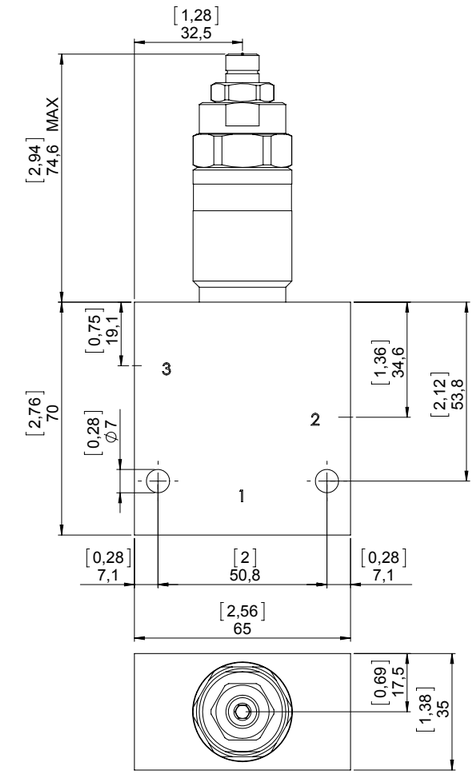

STANDARD HOUSING

Ordering code:	See page 9.03.002
Material:*	Aluminium/Steel Max working pressure for aluminum body: 210 bar Max working pressure for steel body: 350 bar

**Note:* To correctly select the material, in relation to application, see page S.003.

Ordering code

P10S-35 - -

Seals
- None (std. NBR+Polyurethane)
- **Y**- Polyurethane
- For other options contact Sales dept.

Spring setting

	Range bar-(psi)	Pressure increase bar/turn (psi/turn)
0	5-25 bar (72-362 psi)	6 bar (87 psi)
1	20-55 bar (290-800 psi)	8 bar (116 psi)

Material std. housing
- **A**- Aluminium
- **S**- Steel

Housing size ports
- None (std. only cartridge)
- **3B**- 3/8" BSP
- **4B**- 1/2" BSP
- **3S**- SAE 8
- **4S**- SAE 10

*Valve Setting**
- None (Valve not set)
- **S50**- Setting in bar (50)

**Note:* Settings are performed at a flow rate of 4 l/min.

P10U-40

Sequence valve, direct acting, normally closed, internal pilot

Description

Direct acting sequence valves designed for application where is required to divert oil to a second circuit at a predetermined pressure.

Operation mode

In normal condition port 2 is open to the tank via port 3 and port 1 is blocked, when the pressure on port 1 exceeds the pressure setting the spool of the valve will opens port 1 to port 2 and port 3 is blocked but must stay always connected to tank.

GENERAL DATA

Weight: 0,36 Kg (0,79 lbs).
Ambient temperature: -30 °C a 60 °C with seals standard (NBR).
Max proof pressure: 300 bar (4.350 psi).
Flow Max: 30l/min (7,9 gpm).
Cartridge materials: high strength steel, internal parts hardened and grinding.

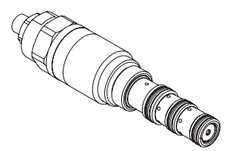

TECHNICAL DATA

HYDRAULIC

Max. pressure:	210 bar (3046 psi)
Flow rate:	4 l/min (1,1 gpm)
Fluid: *Viscosity:*	Mineral based oil From 15cSt to 250 cSt
Leakage::*	150 cc/min P max. 350 bar (5.000 psi)
Standard seals:	O-ring NBR Seals Polyurethane
Cavity:	SCN1040
Installation torque:	33 Nm
Installation torque nut Hex 17:	10 Nm
Max contamination level:	NAS 8 ISO 4406 19/17/14
Fluid temperature range:	From -20 to +80 °C
Seals kit std.:	5AG0044

**Note:* The leakage are to be considered at a pressure equal to 80% of the setting request.

Drawing

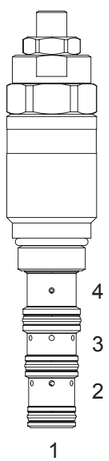

Hydraulic symbol

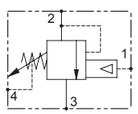

Performance graph

Oil viscosity: 46 cSt (217 SSU) Fluid temperature: 40 °C

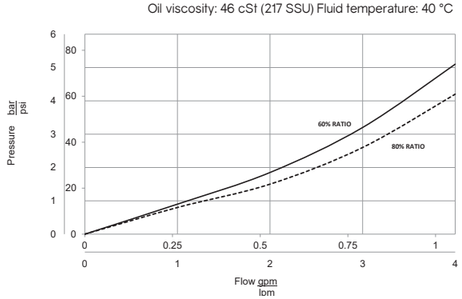

P10U-40

Inches
Millimeters

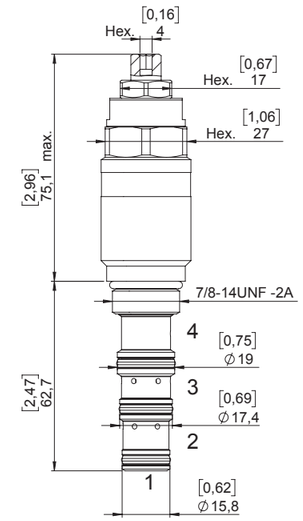

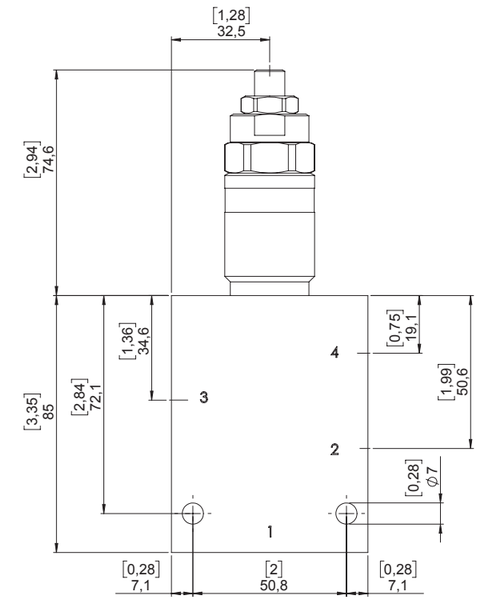

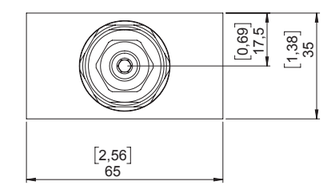

STANDARD HOUSING

Ordering code:	See page 9.03.005
Material:*	Aluminium/Steel Max working pressure for aluminum body: 210 bar Max working pressure for steel body: 350 bar

**Note:* To correctly select the material, in relation to application, see page S.003.

Ordering code

P10U-40 - -

Seals
- None (std. NBR+Polyurethane)
- **Y**- Polyurethane
- For other options contact Sales dept.

Spring setting

	Range bar-(psi)	Pressure increase bar/turn (psi/turn)
0	5-25 bar (72-362 psi)	6 bar (87 psi)
1	20-55 bar (290-800 psi)	8 bar (116 psi)

*Valve Setting**
- None (Valve not set)
- **S50**- Setting in bar (50)

Loading and unloading ratios
- 60%
- 80%

Material std. housing
- **A**- Aluminium
- **S**- Steel

Housing size ports
- None (std. only cartridge)
- **3B**- 3/8" BSP
- **4B**- 1/2" BSP
- **3S**- SAE 8
- **4S**- SAE 10

**Note:* Settings are performed at a flow rate of 4 l/min.

Electric valves On-Off 1.

Electro-proportional valves 2.

Pressure control valves 3.

Flow control valves 4.

Directional control valves 5.

Load control valves 6.

Special solutions 7.

Coils Standard bodies Cavity 8. 9. 10.

Service (Emergency manual override, general conditions, technical specifications) S.

F08S-20

Bidirectional needle valve

Description

Needle cartridge valve, variable orifice, bidirectional, poppet style.

Operation mode

The valve increases its orifice size from fully closed to fully open with counter clockwise rotation. In fully closed position, flow is blocked from 2 to 1 and from 1 to 2.

GENERAL DATA

Weight: 0,115 Kg (0,25 lbs).
Ambient temperature range: -30 °C a 60 °C with seals standard (NBR).
Max proof pressure: 420 bar (6.090 psi).
Flow Max: 40 l/min (5,3 gpm).
Cartridge materials: high strength steel, internal parts hardened and grinding.

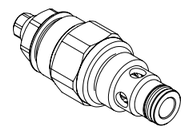

TECHNICAL DATA

HYDRAULIC

Max. working pressure:	350 bar (5.000 psi)
Flow rate:	40 l/min (5,3 gpm)
Fluid: *Viscosity:*	Mineral based oil From 15cSt to 250 cSt
Leakage:	0,25 cc/min (5 drops/min)
Standard seals:	O-ring NBR Seal Polyurethane
Cavity:	SCN0820
Installation torque:	30 Nm
Installation torque nut Hex. 17:	10 Nm
Max contamination level:	NAS 8 ISO 4406 19/17/14
Fluid temperature range:	From -20 °C to +80 °C
Seals kit std.:	5AG0018

Drawing

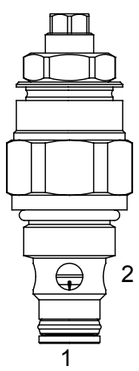

Hydraulic symbol

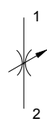

Pressure drop

Oil viscosity: 46 cSt (217 SSU) Fluid temperature: 40 °C

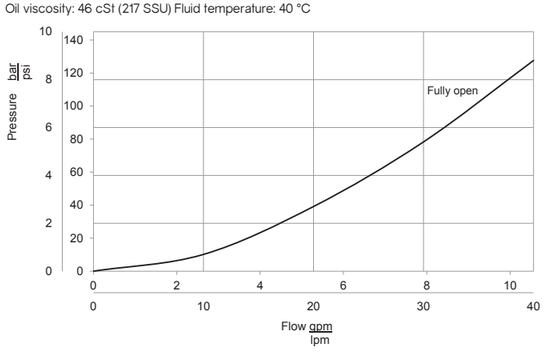

F08S-20

Inches
Millimeters

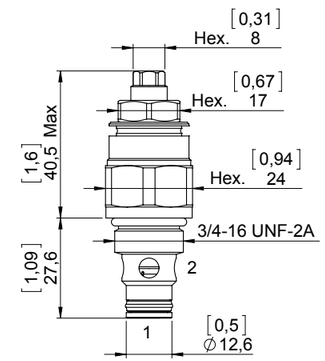

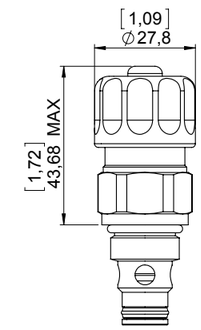

HF-Friction Knob

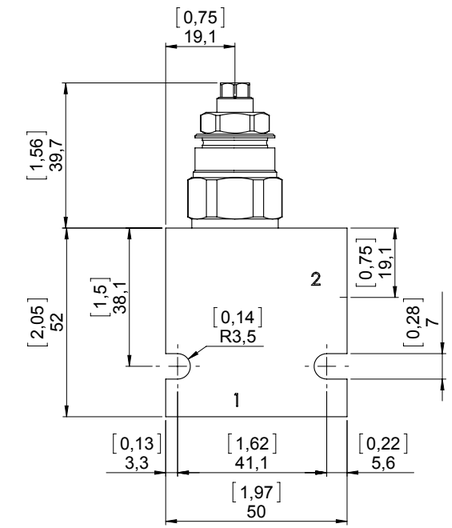

STANDARD HOUSING

Ordering code:	See page 9.02.001
Material:*	Aluminium/Steel Max working pressure for aluminum body: 210 bar Max working pressure for steel body: 350 bar

**Note:* To correctly select the material, in relation to application, see page S.003.

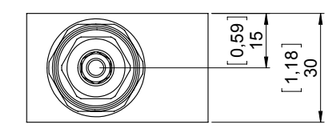

Ordering code

F08S-20 -

Seals
- None (std. NBR+Polyurethane)
- **Y**- Polyurethane
- For other options contact Sales dept.

Adjustment options
- None (std. Hex socket screw)
- **HF**- Frction Knob

Material std. housing
- **A**- Aluminium
- **S**- Steel

Housing size ports
- None (std. only cartridge)
- **2B**- 1/4" BSP
- **3B**- 3/8" BSP
- **2S**- SAE 6
- **3S**- SAE 8

F08S-21

Unidirectional needle valve

Description

Needle cartridge valve, variable orifice, unidirectional, poppet style.

Operation mode

The valve increases its orifice size from fully closed to fully open with counter clockwise rotation. In fully closed position, flow is blocked from 2 to 1 and open from 1 to 2.

GENERAL DATA

Weight: 0,115 Kg (0,25 lbs).
Ambient temperature range: -30 °C a 60 °C with seals standard (NBR).
Max proof pressure: 420 bar (6.090 psi).
Flow Max: 40 l/min (5,3 gpm).
Cartridge materials: high strength steel, internal parts hardened and grinding.

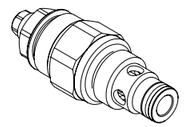

TECHNICAL DATA

HYDRAULIC

Max. working pressure:	350 bar (5.000 psi)
Flow rate:	40 l/min (5,3 gpm)
Fluid: *Viscosity:*	Mineral based oil From 15cSt to 250 cSt
Leakage:	0,75 cc/min (15 drops/min)
Standard seals:	O-ring NBR Backup ring PTFE
Cavity:	SCN0820
Installation torque:	30 Nm
Installation torque nut Hex. 17:	10 Nm
Max contamination level:	NAS 8 ISO 4406 19/17/14
Fluid temperature range:	From -20 °C to +80 °C
Seals kit std.:	5AG0012

Drawing

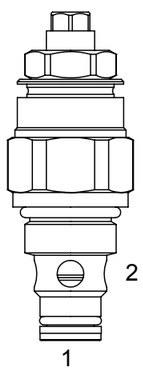

Hydraulic symbol

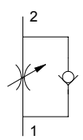

Pressure drop

Oil viscosity: 46 cSt (217 SSU) Fluid temperature: 40 °C

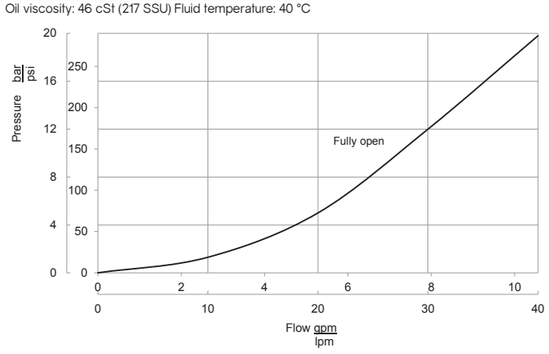

F08S-21

Inches
Millimeters

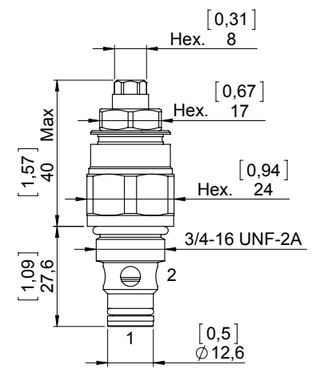

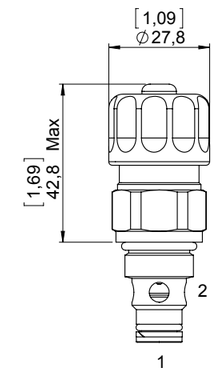

HF-Friction Knob

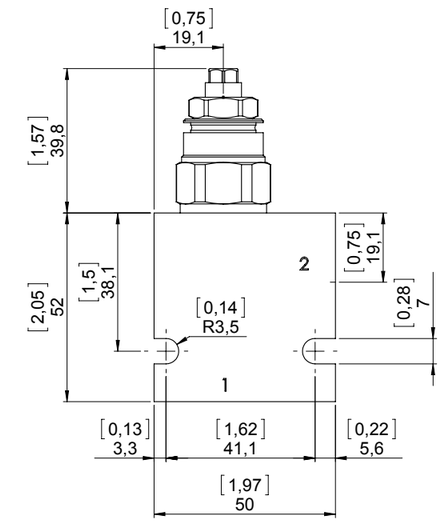

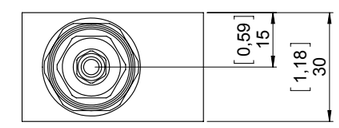

STANDARD HOUSING

Ordering code:	See page 9.02.001
Material:*	Aluminium/Steel Max working pressure for aluminum body: 210 bar Max working pressure for steel body: 350 bar

**Note:* To correctly select the material, in relation to application, see page S.003.

Ordering code

F08S-21 -

Seals
- None (std. NBR+Polyurethane)
- **Y**- Polyurethane
- For other options contact Sales dept.

Adjustment options
- None (std. Hex socket screw)
- **HF**- Frction Knob

Material std. housing
- **A**- Aluminium
- **S**- Steel

Housing size ports
- None (std. only cartridge)
- **2B**- 1/4" BSP
- **3B**- 3/8" BSP
- **2S**- SAE 6
- **3S**- SAE 8

F10S-20

Bidirectional needle valve

Description

Needle cartridge valve, variable orifice, bidirectional, poppet style.

Operation mode

The valve increases its orifice size from fully closed to fully open with counter clockwise rotation. In fully closed position, flow is blocked from 2 to 1 and from 1 to 2.

GENERAL DATA

Weight: 0,15 Kg (0,33 lbs).
Ambient temperature range: -30 °C a 60 °C with standard seals (NBR).
Max. proof pressure: 420 bar (6.090 psi).
Flow Max: 60 l/min (15,9 gpm).
Cartridge materials: high strength steel, internal parts hardened and grinding.

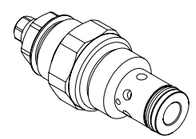

TECHNICAL DATA

HYDRAULIC	
Max. working pressure:	350 bar (5.000 psi)
Flow rate:	60 l/min (15,9 gpm)
Fluid: *Viscosity:*	Mineral based oil From 15cSt to 250 cSt
Leakage:	0,25 cc/min (5 drops/min)
Standard seals:	O-ring NBR Seal Polyurethane
Cavity:	SCN1020
Installation torque:	40 Nm
Installation torque nut Hex. 17:	20 Nm
Max contamination level:	NAS 8 ISO 4406 19/17/14
Fluid temperature range:	From -20 °C to +80 °C
Seals kit std.:	5AG0026

Drawing

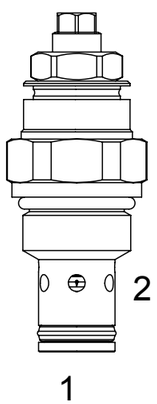

Hydraulic symbol

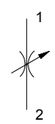

Pressure drop

Oil viscosity: 46 cSt (217 SSU) Fluid temperature: 40 °C

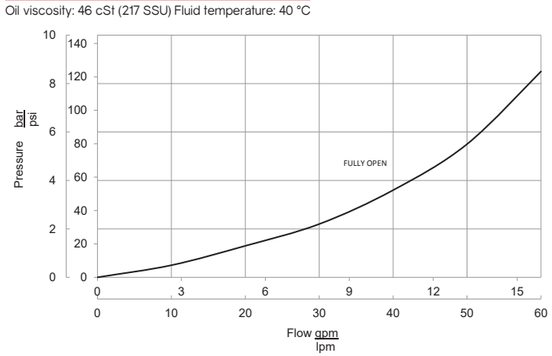

F10S-20

Inches
Millimeters

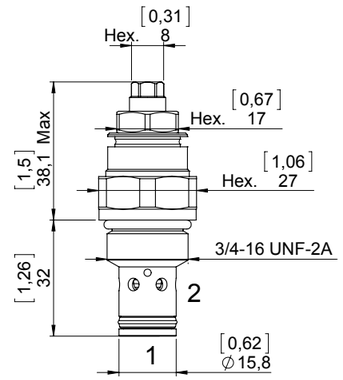

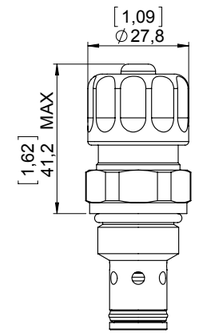

HF-Friction Knob

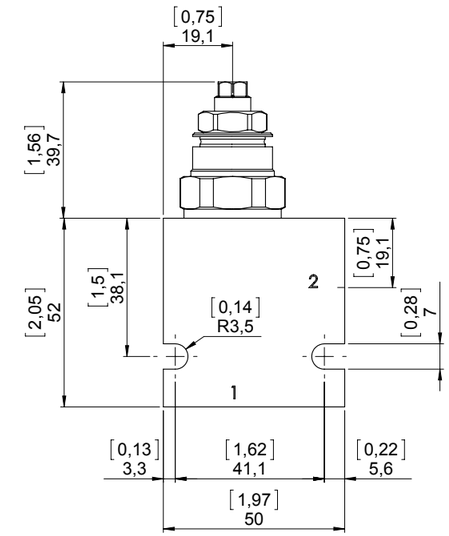

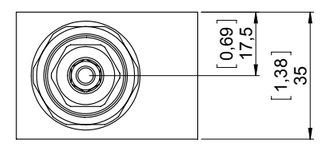

STANDARD HOUSING

Ordering code:	See page 9.03.001
Material:*	Aluminium/Steel Max working pressure for aluminum body: 210 bar Max working pressure for steel body: 350 bar

**Note:* To correctly select the material, in relation to application, see page S.003.

Ordering code

F10S-20 -

Seals
- None (std. NBR+Polyurethane)
- **Y**- Polyurethane
- For other options contact Sales dept.

Adjustment options
- None (std. Hex socket screw)
- **HF**- Frction Knob

Material std. housing
- **A**- Aluminium
- **S**- Steel

Housing size ports
- **3B**- 3/8" BSP
- **4B**- 1/2" BSP
- **3S**- SAE 8
- **4S**- SAE 10

F10S-21

Unidirectional needle valve

Description

Needle cartridge valve, variable orifice, unidirectional, poppet style.

Operation mode

The valve increases its orifice size from fully closed to fully open with counter clockwise rotation. In fully closed position, flow is blocked from 2 to 1 and open from 1 to 2.

GENERAL DATA

Weight: 0,15 Kg (0,33 lbs).
Ambient temperature range: -30 °C a 60 °C with standard seals (NBR).
Max. proof pressure: 420 bar (6.090 psi).
Flow Max: 60 l/min (15,9 gpm).
Cartridge materials: high strength steel, internal parts hardened and grinding.

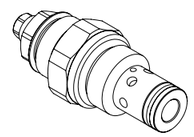

TECHNICAL DATA

HYDRAULIC

Max. working pressure:	350 bar (5.000 psi)
Flow rate:	60 l/min (15,9 gpm)
Fluid: *Viscosity:*	Mineral based oil From 15cSt to 250 cSt
Leakage:	0,75 cc/min (15 drops/min)
Standard seals:	O-ring NBR Backup ring PTFE
Cavity:	SCN1020
Installation torque:	40 Nm
Installation torque nut Hex. 17:	20 Nm
Max contamination level:	NAS 8 ISO 4406 19/17/14
Fluid temperature range:	From -20 °C to +80 °C
Seals kit std.:	5AG0025

Drawing

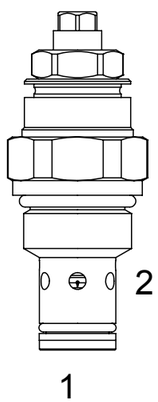

Hydraulic symbol

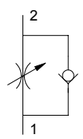

Pressure drop

Oil viscosity: 46 cSt (217 SSU) Fluid temperature: 40 °C

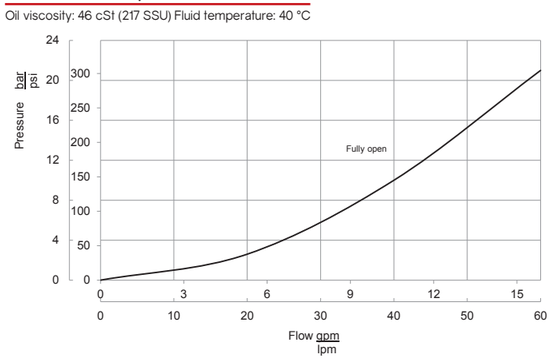

F10S-21

Inches
Millimeters

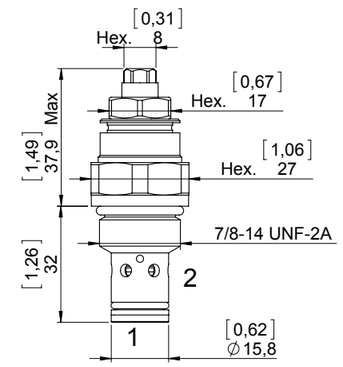

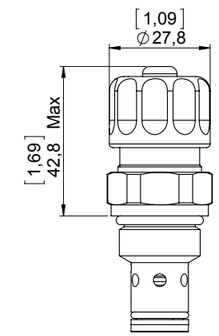

HF-Friction Knob

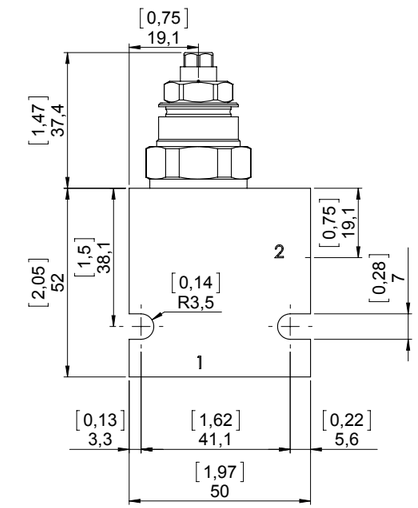

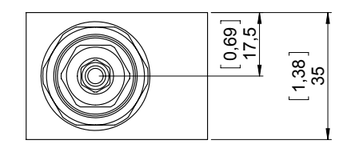

STANDARD HOUSING

Ordering code:	See page 9.03.001
Material:*	Aluminium/Steel Max working pressure for aluminum body: 210 bar Max working pressure for steel body: 350 bar

**Note:* To correctly select the material, in relation to application, see page S.003.

Ordering code

F10S-21 -

Seals
- None (std. NBR+PTFE)
- **Y**- Polyurethane
- For other options contact Sales dept.

Adjustment options
- None (std. Hex socket screw)
- **HF**- Frction Knob

Material std. housing
- **A**- Aluminium
- **S**- Steel

Housing size ports
- **3B**- 3/8" BSP
- **4B**- 1/2" BSP
- **3S**- SAE 8
- **4S**- SAE 10

F12S-20

Bidirectional needle valve

Description

Needle cartridge valve, variable orifice, bidirectional, poppet style.

Operation mode

The valve increases its orifice size from fully closed to fully open with counter clockwise rotation. In fully closed position, flow is blocked from 2 to 1 and from 1 to 2.

GENERAL DATA

Weight: 0,24 Kg (0,53 lbs).
Ambient temperature range: -30 °C a 60 °C with standard seals (NBR).
Max. proof pressure: 420 bar (6.090 psi).
Flow Max: 110 l/min (29 gpm).
Cartridge materials: high strength steel, internal parts hardened and grinding.

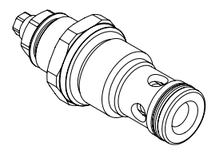

TECHNICAL DATA

HYDRAULIC

Max. working pressure:	350 bar (5.075 psi)
Flow rate:	120 l/min (31,7 gpm)
Fluid: *Viscosity:*	Mineral based oil From 15cSt to 250 cSt
Leakage:	0,75 cc/min (15 drops/min)
Standard seals:	O-ring NBR Seal Polyurethane
Cavity:	SCN1220
Installation torque:	40 Nm
Installation torque nut Hex. 17:	20 Nm
Max contamination level:	NAS 8 ISO 4406 19/17/14
Fluid temperature range:	From -20 °C to +80 °C
Seals kit std.:	5AG0028

Drawing

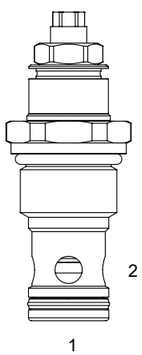

Hydraulic symbol

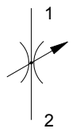

Pressure drop

Oil viscosity: 46 cSt (217 SSU) Fluid temperature: 40 °C

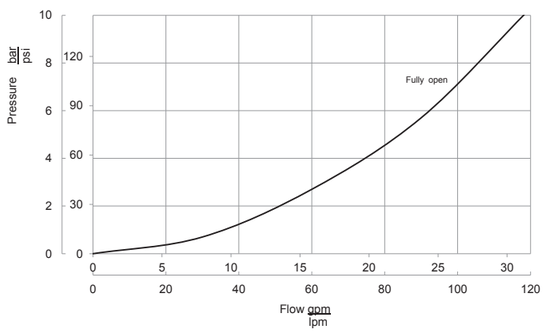

F12S-20

Inches
Millimeters

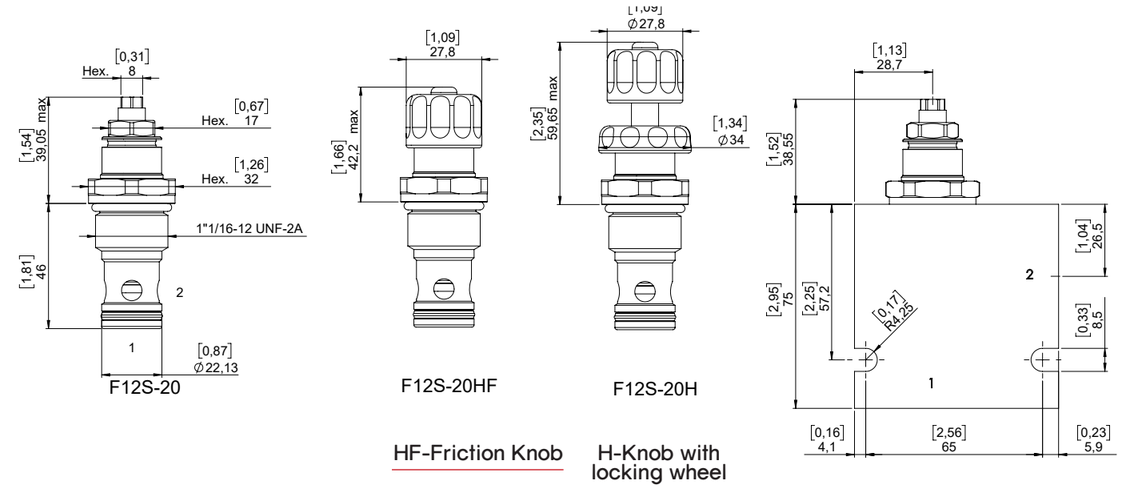

HF-Friction Knob

H-Knob with locking wheel

STANDARD HOUSING

Ordering code:	See page 9.04.001
Material:*	Aluminium/Steel Max working pressure for aluminum body: 210 bar Max working pressure for steel body: 350 bar

**Note:* To correctly select the material, in relation to application, see page S.003.

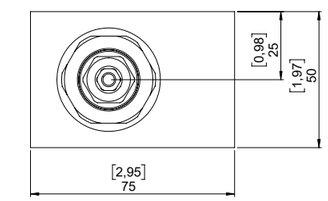

Ordering code

F12S-20 -

Seals
- None (std. NBR+Polyurethane)
- **Y**- Polyurethane
- For other options contact Sales dept.

Adjustment options
- None (std. Hex socket screw)
- **H**- Knob with locking wheel
- **HF**- Frction Knob

Material std. housing
- **A**- Aluminium
- **S**- Steel

Housing size ports
- **4B**- 1/2" BSP
- **5B**- 3/4" BSP
- **4S**- SAE 10
- **5S**- SAE 12

F08C-21F

Fix setting compensated
2 way flow control valve

Description

2 way flow control valve unidirectional pressure compesated.

Operation mode

The valve keeps a constant flow rate out of port 2 regardless of load pressure changes on port 2, or upstream of port 1.

GENERAL DATA

Weight without coil: 0,075 Kg (0,16 lbs).
Ambient temperature range: -30 °C a 60 °C with standard seals (NBR).
Max. proof pressure: 350 bar (5.075 psi).
Flow Max: 7,5 l/min (2 gpm).
Cartridge materials: high strength steel, internal parts hardened and grinding.

TECHNICAL DATA

HYDRAULIC

Max. working pressure:	210 bar (3.045 psi)
Flow rate:	7,5 l/min (2 gpm)
Fluid: *Viscosity:*	Mineral based oil From 15cSt to 250 cSt
Leakage:	200 cc/min P max 210 bar (3.176 psi)
Standard seals:	O-ring NBR Seal Polyurethane
Cavity:	SCN0820
Installation torque:	30 Nm
Max contamination level:	NAS 8 ISO 4406 19/17/14
Fluid temperature range:	From -20 °C to +80 °C
Seals kit std.:	5AG0046

Drawing

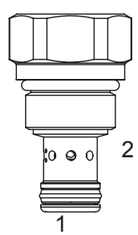

Hydraulic symbol

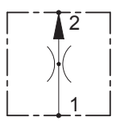

Pressure drop

Oil viscosity: 46 cSt (217 SSU) Fluid temperature: 40 °C

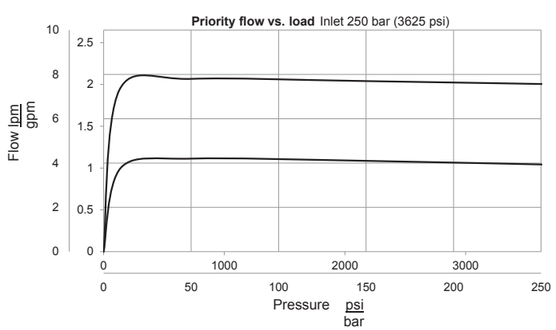

F08C-21F

Inches
Millimeters

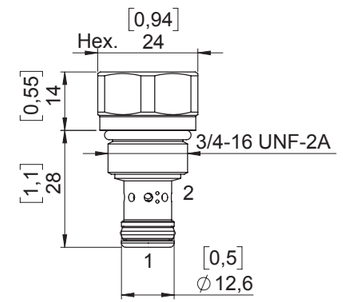

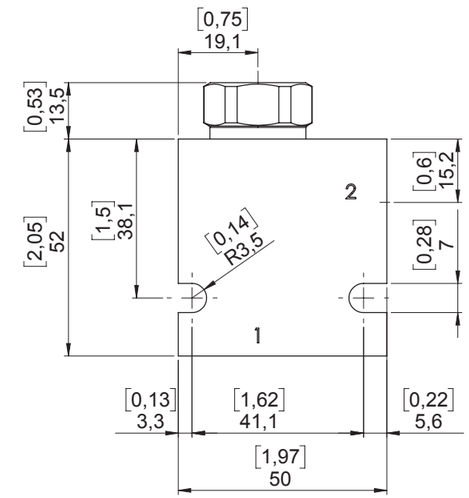

STANDARD HOUSING

Ordering code:	See page 9.02.001
Material:*	Aluminium/Steel Max working pressure for aluminum body: 210 bar Max working pressure for steel body: 350 bar

**Note:* To correctly select the material, in relation to application, see page S.003.

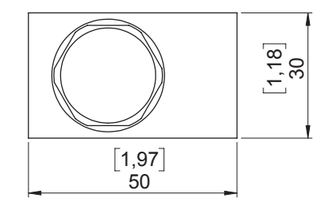

Ordering code

F08C-21F -

Seals
- None (std. NBR+Polyurethane)
- **Y**- Polyurethane
- For other options contact Sales dept.

Regulated flow
- **0,2** - 0,2 l/min (0,52 gpm)
- **0,4** - 0,4 l/min (0,10 gpm)
- **0,8** - 0,8 l/min (0,21 gpm)
- **2** - 2 l/min (0,52 gpm)
- **2,3** - 2,3 l/min (0,60 gpm)
- **3,2** - 3,2 l/min (0,84 gpm)
- **3,8** - 3,8 l/min (1,00 gpm)
- **4** -4 l/min (1,06 gpm)
- **7,5** - 7,5 l/min (1,98 gpm)

Housing size ports
- None (std. only cartridge)
- **2B**- 1/4" BSP
- **3B**- 3/8" BSP
- **2S**- SAE 6
- **3S**- SAE 8

Material std. housing
- **A**- Aluminium
- **S**- Steel

F10C-21F

Fix setting compensated
2 way flow control valve

Description

2 way flow control valve unidirectional pressure compesated.

Operation mode

The valve keep a constant flow rate out of port 2 regardless of load pressure changes on port 2, or upstream of port 1.

GENERAL DATA

Weight without coil: 0,14 Kg (0,3 lbs).
Ambient temperature range: -30 °C a 60 °C with standard seals (NBR).
Max. proof pressure: 350 bar (5.075 psi).
Flow Max: 17 l/min (4,5 gpm).
Cartridge materials: high strength steel, internal parts hardened and grinding.

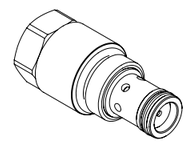

Drawing

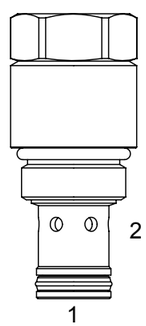

Hydraulic symbol

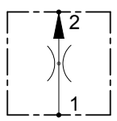

TECHNICAL DATA

HYDRAULIC

Max. working pressure:	250 bar (3.626 psi)
Flow rate:	17 l/min 4,5 gpm)
Fluid: *Viscosity:*	Mineral based oil From 15cSt to 250 cSt
Leakage:	200 cc/min P max 350 bar (5.075 psi)
Standard seals:	O-ring NBR Seal Polyurethane
Cavity:	SCN1020
Installation torque:	40 Nm
Max contamination level:	NAS 8 ISO 4406 19/17/14
Fluid temperature range:	From -20 °C to +80 °C
Seals kit std.:	5AG0026

Pressure drop

Oil viscosity: 46 cSt (217 SSU) Fluid temperature: 40 °C

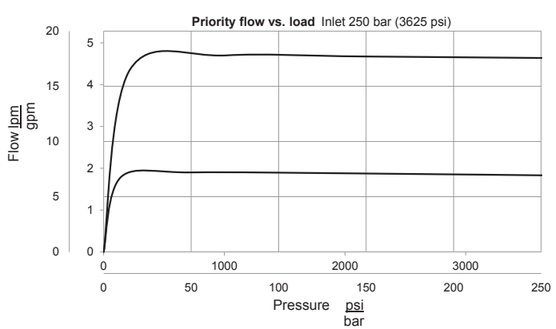

F10C-21F

Inches
Millimeters

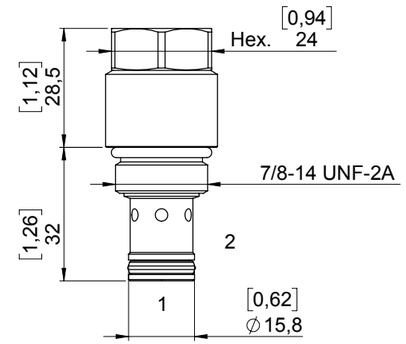

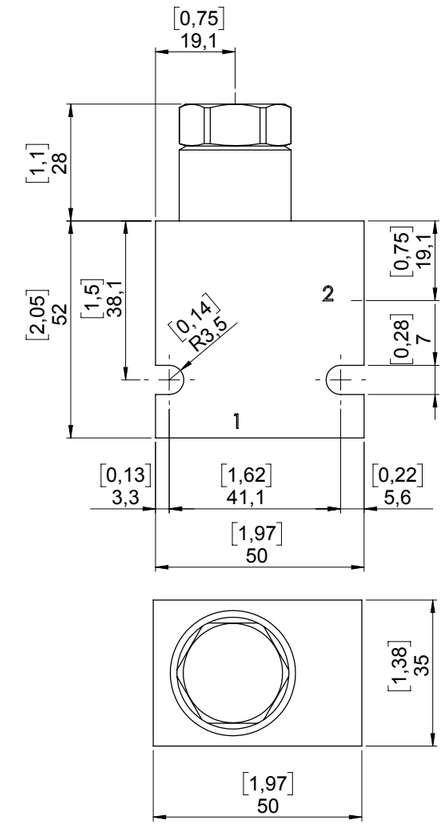

STANDARD HOUSING

Ordering code:	See page 9.03.001
Material:*	Aluminium/Steel Max working pressure for aluminum body: 210 bar Max working pressure for steel body: 350 bar

**Note:* To correctly select the material, in relation to application, see page S.003.

Ordering code

F10C-21F -

Seals
- None (std. NBR+Polyurethane)
- **Y**- Polyurethane
- For other options contact Sales dept.

Regulated flow
- **0,4** - 0,4 l/min (0,10 gpm)
- **1** - 1 l/min (0,26 gpm)
- **2** - 2 l/min (0,52 gpm)
- **4**- 4 l/min (1,06 gpm)
- **6** - 6 l/min (1,58 gpm)
- **8** - 8 l/min (2,11 gpm)
- **10** - 10 l/min (2,64 gpm)
- **13,5** -13,5 l/min (3,57 gpm)
- **17**- 17 l/min (4,49 gpm)

Material std. housing
- **A**- Aluminium
- **S**- Steel

Housing size ports
- None (std. only cartridge)
- **3B**- 3/8" BSP
- **4B**- 1/2" BSP
- **3S**- SAE 8
- **4S**- SAE 10

F10C-22

Manual operated compensated
2 ways flow control valve

Description

2 ways flow control valve unidirectional pressure compensated.

Operation mode

The valve keep a constant flow rate out of port 2 regardless of load pressure changes on port 2, or upstream of port 1.
The regulated flow port 2 increases from closed to fully open with counter-clockwise rotation of the adjustment screw. The valve will maintain the set flow regardless of pressure variations.

GENERAL DATA

Weight without coil: 0,15 Kg (0,33lbs).
Ambient temperature range: -30 °C a 60 °C with standard seals (NBR).
Max. proof pressure: 350 bar (5.075 psi).
Flow Max: 30 l/min (7,9 gpm).
Cartridge materials: high strength steel, internal parts hardened and grinding.

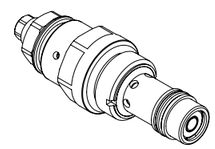

TECHNICAL DATA

HYDRAULIC	
Max. working pressure:	300 bar (4.350 psi)
Flow rate:	30 l/min (7,9 gpm)
Fluid: *Viscosity:*	Mineral based oil From 15cSt to 250 cSt
Leakage:	200 cc/min P max 350 bar (5.075 psi)
Standard seals:	O-ring NBR Seal Polyurethane
Cavity:	SCN1021
Installation torque:	33 Nm
Installation torque nut Hex. 17:	20 Nm
Max contamination level:	NAS 8 ISO 4406 19/17/14
Fluid temperature range:	From -20 °C to +80 °C
Seals kit std.:	5AG0047

Drawing

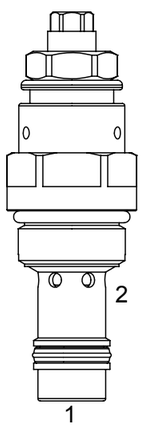

Hydraulic symbol

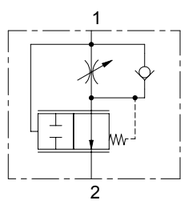

Regulated flow vs turns

Oil viscosity: 46 cSt (217 SSU) Fluid temperature: 40 °C

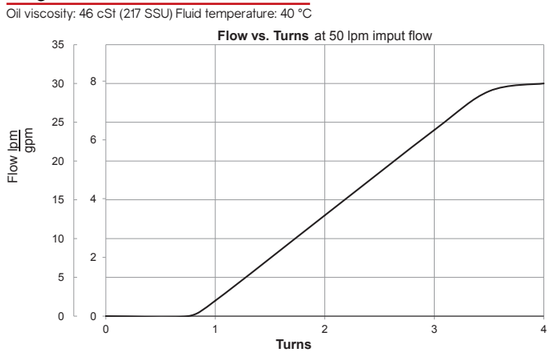

Performance graph

Oil viscosity: 46 cSt (217 SSU) Fluid temperature: 40 °C

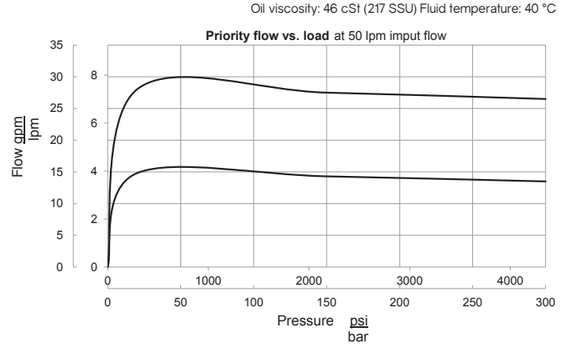

F10C-22

Inches
Millimeters

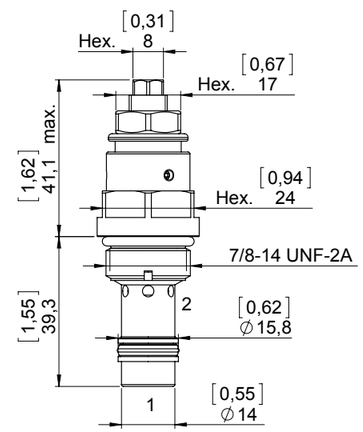

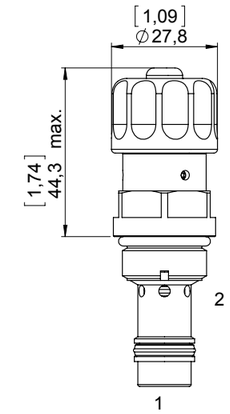

HF-Friction Knob

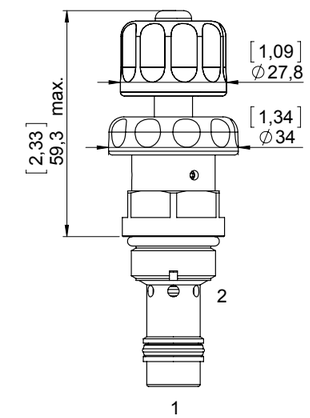

H-Knob with locking wheel

Ordering code

F10C-22 -

Seals

- None (std. NBR+Polyurethane)
- **Y**- Polyurethane
- For other options contact Sales dept.

Adjustment options

- None (std. Hex socket screw)
- **H**- Knob with locking wheel
- **HF**- Frction Knob

F12C-22

Manual operated compensated
2 ways flow control valve

Description

2 ways flow control valve unidirectional pressure compensated.

Operation mode

The valve keep a constant flow rate out of port 2 regardless of load pressure changes on port 2, or upstream of port 1.
The regulated flow port 2 increases from closed to fully open with counter-clockwise rotation of the adjustment screw. The valve will maintain the set flow regardless of pressure variations.

GENERAL DATA

Weight: 0,33 Kg (0,72 lbs).
Ambient temperature range: -30 °C a 60 °C with standard seals (NBR).
Max. proof pressure: 350 bar (5.075 psi).
Flow Max: 50 l/min (13,2 gpm).
Cartridge materials: high strength steel, internal parts hardened and grinding.

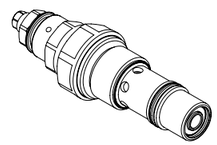

TECHNICAL DATA

HYDRAULIC	
Max. working pressure:	300 bar (4.350 psi)
Flow rate:	50 l/min (13,2 gpm)
Fluid: *Viscosity:*	Mineral based oil From 15cSt to 250 cSt
Leakage:	300 cc/min P max 350 bar (5.075 psi)
Standard seals:	O-ring NBR Seal Polyurethane
Cavity:	SCN1221
Installation torque:	47 Nm
Installation torque nut Hex. 17:	20 Nm
Max contamination level:	NAS 8 ISO 4406 19/17/14
Fluid temperature range:	From -20 °C to +80 °C
Seals kit std.:	5AG0048

Drawing

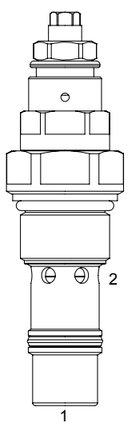

Hydraulic symbol

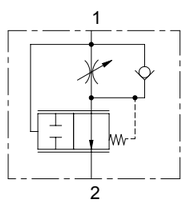

Regulated flow vs turns

Oil viscosity: 46 cSt (217 SSU) Fluid temperature: 40 °C

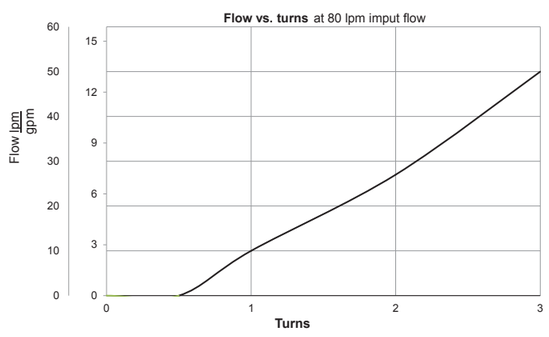

Performance graph

Oil viscosity: 46 cSt (217 SSU) Fluid temperature: 40 °C

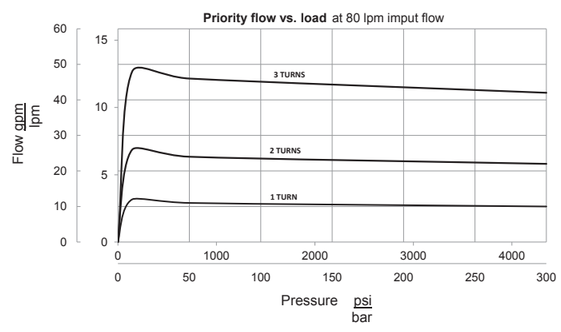

F12C-22

Inches
Millimeters

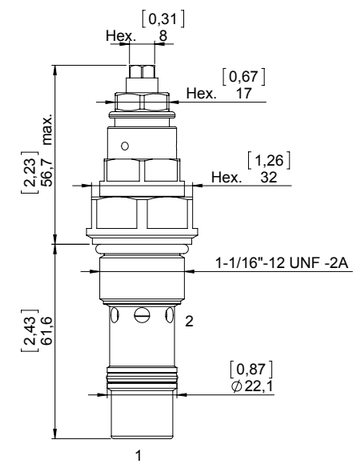

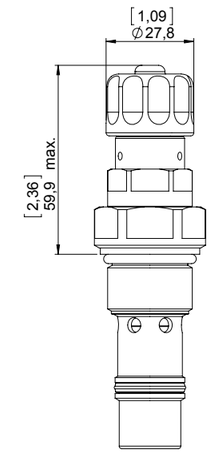

HF-Friction Knob

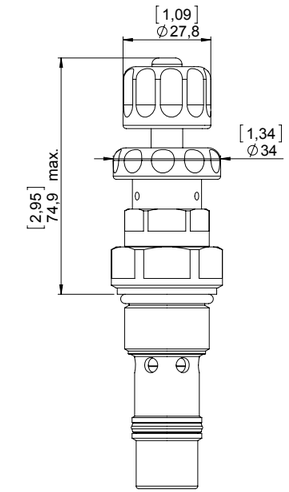

H-Knob with locking wheel

Ordering code

F12C-22 -

Seals

- None (std. NBR+Polyurethane)
- **Y**- Polyurethane
- For other options contact Sales dept.

Adjustment options

- None (std. Hex socket screw)
- **H**- Knob with locking wheel
- **HF**- Frction Knob

F10C-32

Manual operated compensated
3 ways flow control valve

Description

3 ways flow control valve unidirectional pressure compensated, used as a priority-type flow control valve or a restrictive-type 2-way flow regulator when the bypass port (2) is blocked.

Operation mode

The valve Keep a constant flow rate out of port 3 indipendently from pressure changes in the line 3, or in the line 2. The regulated flow increases from closed to fully open, with counter-clockwise rotation of the knob.

In case of use as a 2 way bypass flow regulator in applications where the line 2 port will be blocked, bypass pressure drop will increase unless a small leakage is provided in le line 3.

GENERAL DATA

Weight without coil: 0,16 Kg (0,35 lbs).
Ambient temperature range: -30 °C a 60 °C with standard seals (NBR).
Max. proof pressure: 350 bar (5.075 psi).
Cartridge materials: high strength steel, internal parts hardened and grinding.

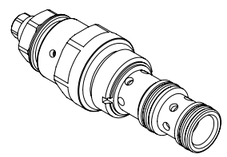

Drawing

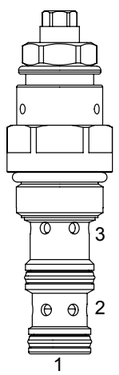

Hydraulic symbol

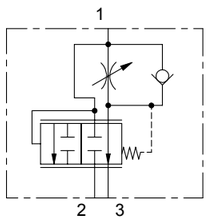

TECHNICAL DATA

HYDRAULIC

Max. working pressure:	300 bar (4.350 psi)
Max. inlet flow	50 l/min (13,2 gpm)
Regulated flow:	30 l/min (7,9 gpm)
Fluid: *Viscosity:*	Mineral based oil From 15cSt to 250 cSt
Leakage:	200 cc/min P max 300 bar (4.350 psi)
Standard seals:	O-ring NBR Seal Polyurethane
Cavity:	SCN1030
Installation torque:	33 Nm
Installation torque nut Hex. 17:	20 Nm
Max contamination level:	NAS 8 ISO 4406 19/17/14
Fluid temperature range:	From -20 °C to +80 °C
Seals kit std.:	5AG0017

Regulated flow vs turns

Oil viscosity: 46 cSt (217 SSU) Fluid temperature: 40 °C

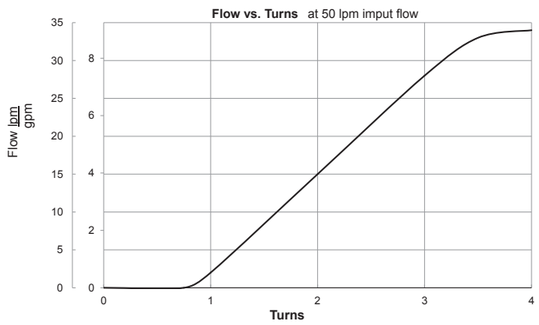

Performance graph

Oil viscosity: 46 cSt (217 SSU) Fluid temperature: 40 °C

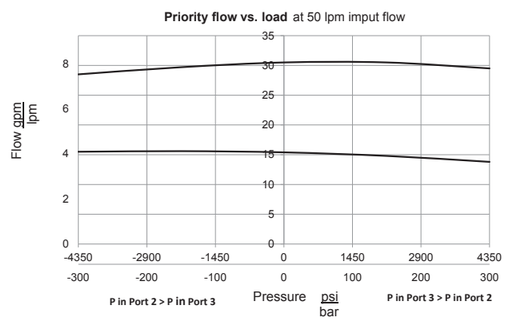

F10C-32

Inches
Millimeters

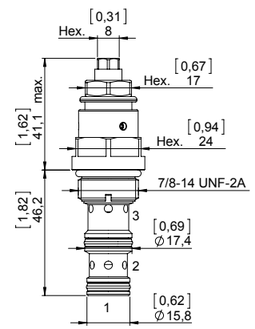

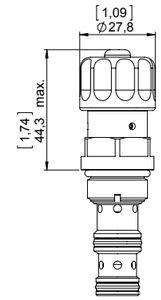

HF-Friction Knob

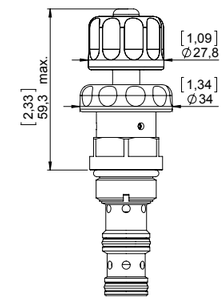

H-Knob with locking wheel

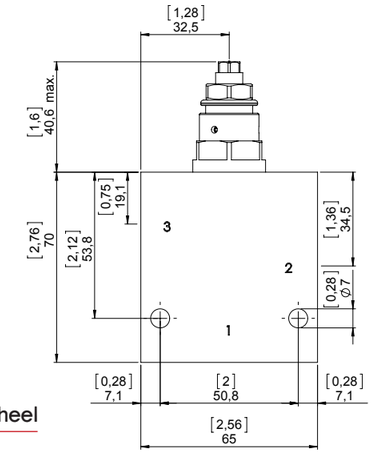

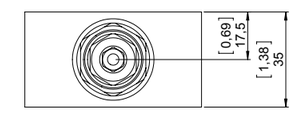

STANDARD HOUSING

Ordering code:	See page 9.03.002
Material:*	Aluminium/Steel Max working pressure for aluminum body: 210 bar Max working pressure for steel body: 350 bar

**Note:* To correctly select the material, in relation to application, see page S.003.

Ordering code

F10C-32 -

Seals
- None (std. NBR+Polyurethane)
- **Y**- Polyurethane
- For other options contact Sales dept.

Adjustment options
- None (std. Hex socket screw)
- **H**- Knob with locking wheel
- **HF**- Frction Knob

Material std. housing
- **A**- Aluminium
- **S**- Steel

Housing size ports
- None (std. only cartridge)
- **3B**- 3/8" BSP
- **4B**- 1/2" BSP
- **3S**- SAE 8
- **4S**- SAE 10

F10C-32F

Fix setting pressure compensated
3 ways flow control valve

Description

3 ways flow control valve unidirectional pressure compensated, used as a priority-type flow control valve or a restrictive-type 2-way flow regulator when the bypass port (2) is blocked.

Operation mode

The valve Keep a constant flow rate out of port 3 indipendently from pressure changes in the line 3, or in the line 2.
In case of use as a 2 way bypass flow regulator in applications where the line 3 port will be blocked, bypass pressure drop will increase unless a small leakage is provided in le line 3.

GENERAL DATA

Weight without coil: 0,16 Kg (0,35 lbs).
Ambient temperature range: -30 °C a 60 °C with standard seals (NBR).
Max. proof pressure: 350 bar (5.075 psi).
Cartridge materials: high strength steel, internal parts hardened and grinding.

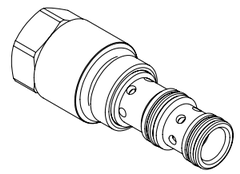

Drawing

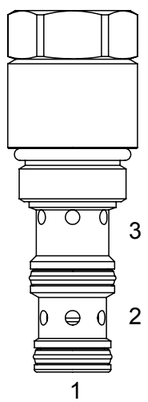

Hydraulic symbol

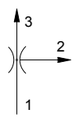

TECHNICAL DATA

HYDRAULIC

Max. working pressure:	300 bar (4.350 psi)
Max. inlet flow	50 l/min (13,2 gpm)
Regulated flow:	22 l/min (5,8 gpm)
Fluid: *Viscosity:*	Mineral based oil From 15cSt to 250 cSt
Leakage:	200 cc/min P max 300 bar (4.350 psi)
Standard seals:	O-ring NBR Seal Polyurethane
Cavity:	SCN1030
Installation torque:	33 Nm
Max contamination level:	NAS 8 ISO 4406 19/17/14
Fluid temperature range:	From -20 °C to +80 °C
Seals kit std.:	5AG0017

Pressure drop

Oil viscosity: 46 cSt (217 SSU) Fluid temperature: 40 °C

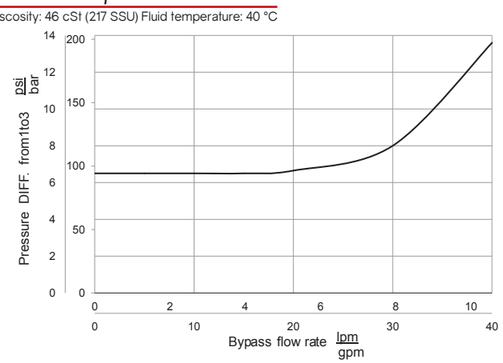

Performance graph

Oil viscosity: 46 cSt (217 SSU) Fluid temperature: 40 °C

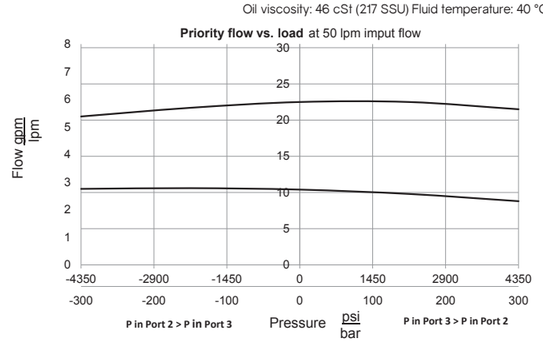

F10C-32F

Inches
Millimeters

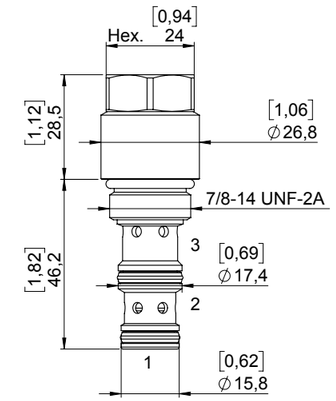

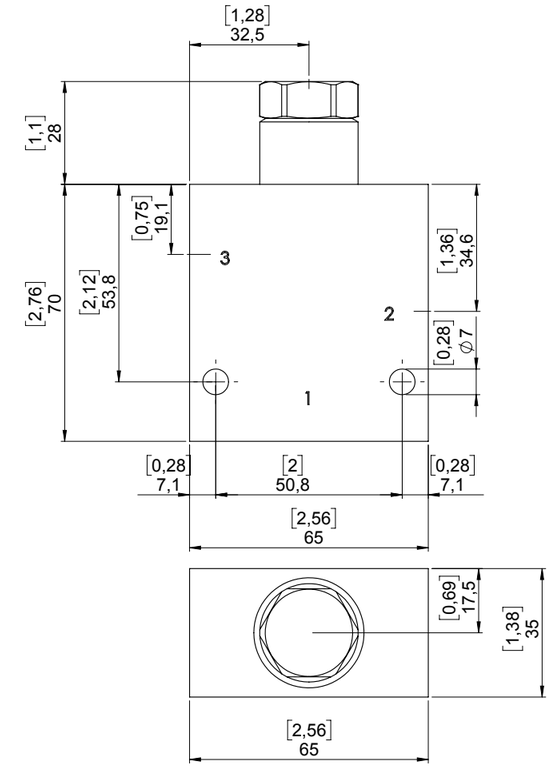

STANDARD HOUSING

Ordering code:	See page 9.03.002
Material:*	Aluminium/Steel Max working pressure for aluminum body: 210 bar Max working pressure for steel body: 350 bar

**Note:* To correctly select the material, in relation to application, see page S.003.

Ordering code

F10C-32F -

Seals
- None (std. NBR+Polyurethane)
- **Y**- Polyurethane
- For other options contact Sales dept.

Regulated flow
- **1** - 1 l/min (0,26 gpm)
- **2,5** - 2,5 l/min (0,66 gpm)
- **2,8** - 2,8 l/min (0,74 gpm)
- **3,5** - 3,5 l/min (0,92 gpm)
- **5** - 5 l/min (1,32 gpm)
- **10** - 10 l/min (2,64 gpm)
- **15** - 15 l/min (3,96 gpm)
- **22** - 22 l/min (5,81 gpm)

Housing size ports
- **3B**- 3/8" BSP
- **4B**- 1/2" BSP
- **3S**- SAE 8
- **4S**- SAE 10

Material std. housing
- **A**- Aluminium
- **S**- Steel

F10C-33

Manual operated compensated fix orifice 3 ways flow control valve

Description

Fixed orifice 3 ways flow control valve with limited range adjustment from a pre-determined nominal setting, unidirectional pressure compensated, used as a priority-type flow control valve.

Operation mode

The valve keeps a constant flow rate out of port 3 indipendently from pressure changes in the line 3, or in the line 2.
Adjusted to +/-25% of nominal setting. At nominal setting, pressure drop is approximately 9 bar, with counter-clockwise rotation of the knob.
In case of use as a 2 way bypass flow regulator in applications where the line 3 port will be blocked, bypass pressure drop will increase unless a small leakage is provided in the line 3.

GENERAL DATA

Weight: 0,27 Kg (0,59 lbs).
Ambient temperature range: -30 C° a 60 C° with seals standard (NBR).
Max proof pressure: 420 bar (6.090 psi).
Flow Max: 50 l/min (13,2 gpm).
Cartridge materials: high strength steel, internal parts hardened and grinding.

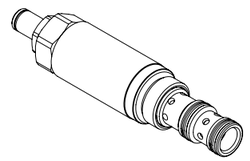

Drawing

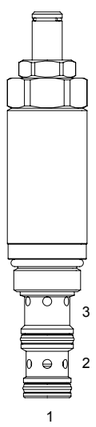

Hydraulic symbol

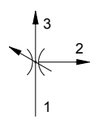

TECHNICAL DATA

HYDRAULIC	
Max. working pressure:	300 bar (4.350 psi)
Max. inlet flow	50 l/min (13,2 gpm)
Regulated flow:	23 l/min (6 gpm)
Fluid: *Viscosity:*	Mineral based oil From 15cSt to 250 cSt
Leakage:	200 cc/min P max 300 bar (4.350 psi)
Standard seals:	O-ring NBR Seal Polyurethane
Cavity:	SCN1030
Installation torque:	33 Nm
Installation torque nut Hex. 17:	20 Nm
Max contamination level:	NAS 8 ISO 4406 19/17/14
Fluid temperature range:	From -20 °C to +80 °C
Seals kit std.:	5AG0017

Note: The leakage are to be considered at a pressure equal to 80% of the setting request.

Pressure drop

Oil viscosity: 46 cSt (217 SSU) Fluid temperature: 40 °C

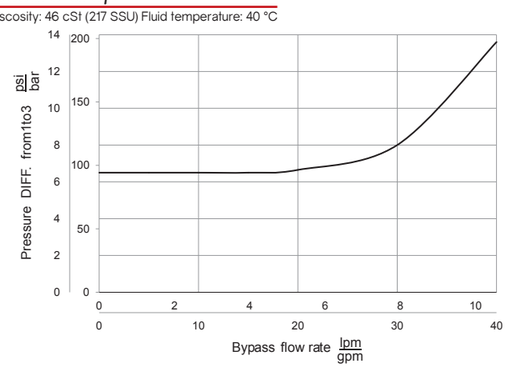

Performance graph

Oil viscosity: 46 cSt (217 SSU) Fluid temperature: 40 °C

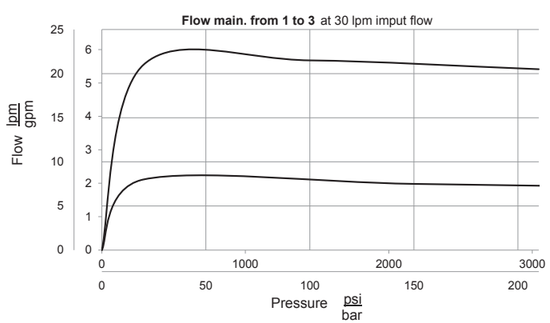

F10C-33

Inches
Millimeters

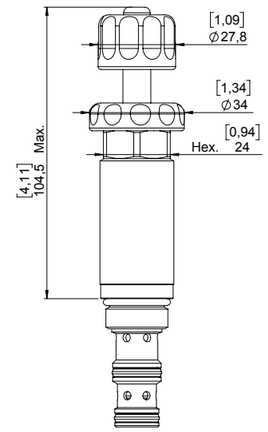

H-Knob with locking wheel

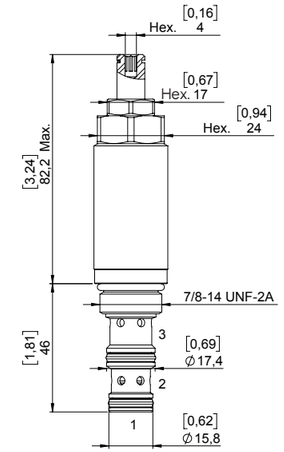

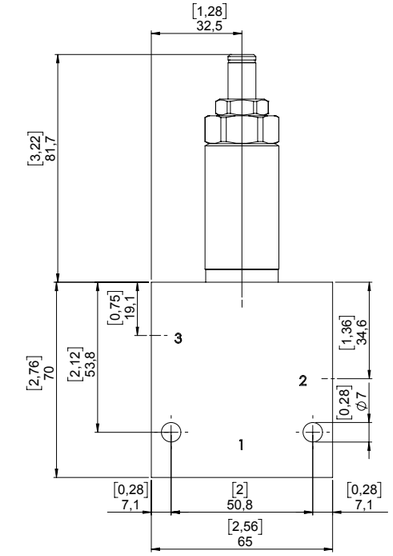

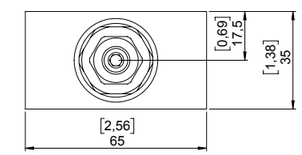

STANDARD HOUSING

Ordering code:	See page 9.03.002
Material:*	Aluminium/Steel Max working pressure for aluminum body: 210 bar Max working pressure for steel body: 350 bar

Note: To correctly select the material, in relation to application, see page S.003.

Ordering code

F10C-33 - - -

Seals
- None (std. NBR+Polyurethane)
- **Y**- Polyurethane
- For other options contact Sales dept.

Adjustment options
- None (std.hex socket screw)
- **H** - Knob with locking wheel

Regulated flow

A	1-2,3 l/min (0,36-0,60 gpm)
B	3-4,5 l/min (0,79-1,18 gpm)
C	6-9 l/min (1,58-2,37 gpm)
D	7,5-11,5 l/min (1,98-3,03 gpm)
E	9-14 l/min (2,37-3,69 gpm)
F	14,2-23 l/min (3,75-6,07 gpm)

Material std. housing
- **A**- Aluminium
- **S**- Steel

Housing size ports
- None (std. only cartridge)
- **3B**- 3/8" BSP
- **4B**- 1/2" BSP
- **3S**- SAE 8
- **4S**- SAE 10

F12C-32

Manual operated compensated
3 ways flow control valve

Description

3 ways flow control valve unidirectional pressure compensated, used as a priority-type flow control valve or a restrictive-type 2-way flow regulator when the bypass port (2) is blocked.

Operation mode

The valve keeps a constant flow rate out of port 3 indipendently from pressure changes in the line 3, or in the line 2. The regulated flow increases from closed to fully open, with counter-clockwise rotation of the knob.

In case of use as a 2 way bypass flow regulator in applications where the line 2 port will be blocked, bypass pressure drop will increase unless a small leakage is provided in the line 3.

GENERAL DATA

Weight: 0,35 Kg (0,77 lbs).
Ambient temperature range: -30 °C a 60 °C with standard seals (NBR).
Max. proof pressure: 350 bar (5.075 psi).
Cartridge materials: high strength steel, internal parts hardened and grinding.

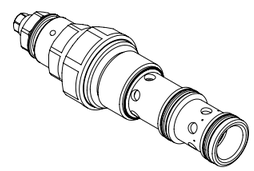

TECHNICAL DATA

HYDRAULIC

Max. working pressure:	300 bar (4.350 psi)
Max. inlet flow	90 l/min (23,7 gpm)
Regulated flow:	60 l/min (15,9 gpm)
Fluid: *Viscosity:*	Mineral based oil From 15cSt to 250 cSt
Leakage:	300 cc/min P max 350 bar (5.075 psi)
Standard seals:	O-ring NBR Seal Polyurethane
Cavity:	SCN1230
Installation torque:	47 Nm
Installation torque nut Hex. 17:	20 Nm
Max contamination level:	NAS 8 ISO 4406 19/17/14
Fluid temperature range:	From -20 °C to +80 °C
Seals kit std.:	5AG0042

Drawing

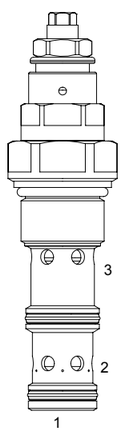

Hydraulic symbol

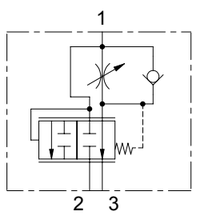

Regulated flow vs turns

Oil viscosity: 46 cSt (217 SSU) Fluid temperature: 40 °C

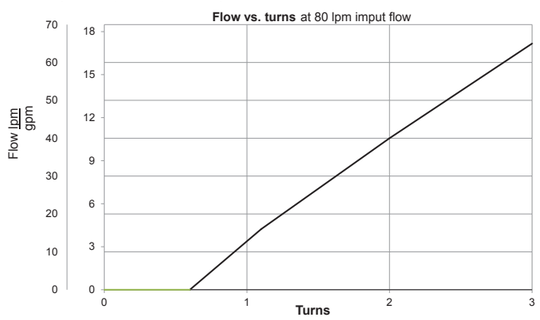

Performance graph

Oil viscosity: 46 cSt (217 SSU) Fluid temperature: 40 °C

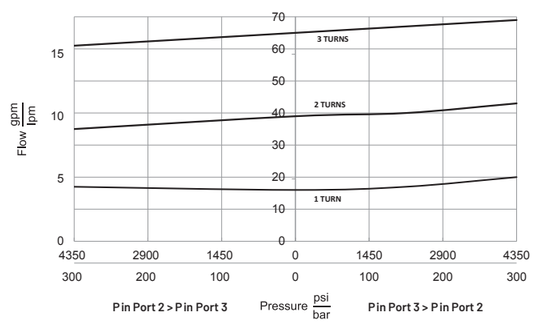

F12C-32

Inches
Millimeters

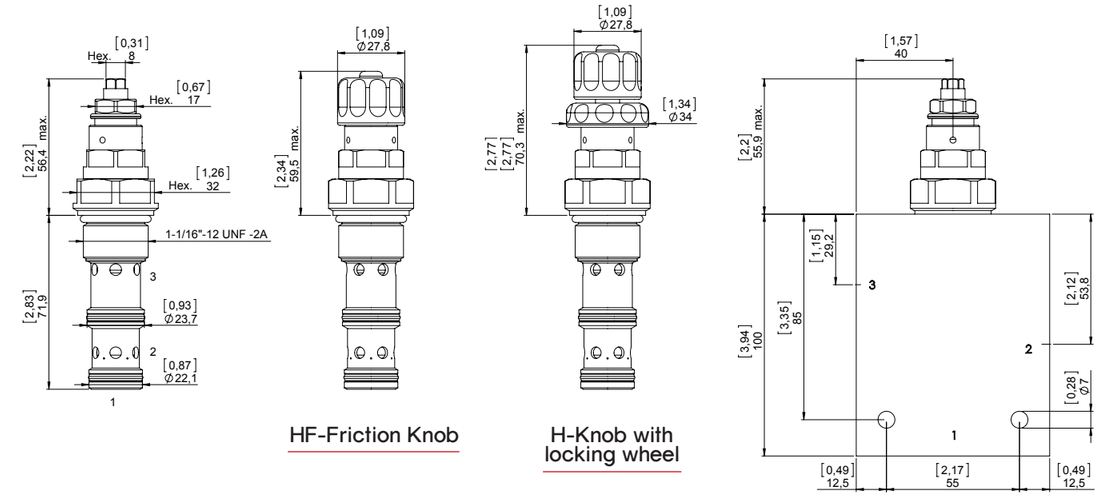

HF-Friction Knob

H-Knob with locking wheel

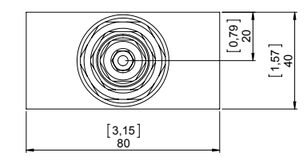

STANDARD HOUSING

Ordering code:	See page 9.04.002
Material:*	Aluminium/Steel Max working pressure for aluminum body: 210 bar Max working pressure for steel body: 350 bar

**Note:* To correctly select the material, in relation to application, see page S.003.

Ordering code

F12C-32 - - - -

Seals
- None (std. NBR+Polyurethane)
- **Y**- Polyurethane
- For other options contact Sales dept.

Adjustment options
- None (std. Hex socket screw)
- **H**- Knob with locking wheel
- **HF**- Frction Knob

Material std. housing
- **A**- Aluminium
- **S**- Steel

Housing size ports
- **4B**- 1/2" BSP
- **5B**- 3/4" BSP
- **4S**- SAE 10
- **5S**- SAE 12

F12C-32F

Fix setting pressure compensated
3 way flow control valve

Description

3 way flow control valve unidirectional pressure compensated, used as a priority-type flow control valve or a restrictive-type 2-way flow regulator when the bypass port (2) is blocked.

Operation mode

The valve Keep a constant flow rate out of port 3 indipendently from pressure changes in the line 3, or in the line 2.
In case of use as a 2 way bypass flow regulator in applications where the line 3 port will be blocked, bypass pressure drop will increase unless a small leakage is provided in le line 3.

GENERAL DATA

Weight: 0,25 Kg (0,55 lbs).
Ambient temperature range: -30 °C a 60 °C with standard seals (NBR).
Max. proof pressure: 350 bar (5.075 psi).
Cartridge materials: high strength steel, internal parts hardened and grinding.

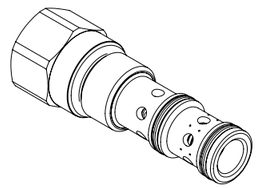

TECHNICAL DATA

HYDRAULIC

Max. working pressure:	250 bar (3625 psi)
Max. inlet flow	90 l/min (23,7 gpm)
Regulated flow:	50 l/min (13,2 gpm)
Fluid: *Viscosity:*	Mineral based oil From 15cSt to 250 cSt
Leakage:	300 cc/min P max 350 bar (5.075 psi)
Standard seals:	O-ring NBR Seal Polyurethane
Cavity:	SCN1230
Installation torque:	40 Nm
Max contamination level:	NAS 8 ISO 4406 19/17/14
Fluid temperature range:	From -20 °C to +80 °C
Seals kit std.:	5AG0042

Drawing

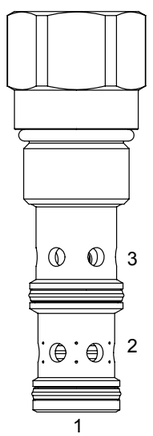

Hydraulic symbol

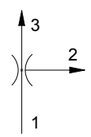

Pressure drop

Oil viscosity: 46 cSt (217 SSU) Fluid temperature: 40 °C

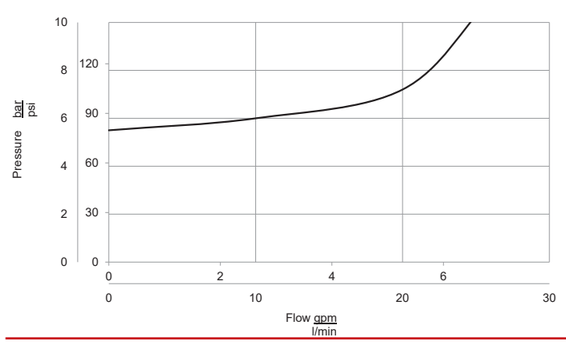

Performance graph

Oil viscosity: 46 cSt (217 SSU) Fluid temperature: 40 °C

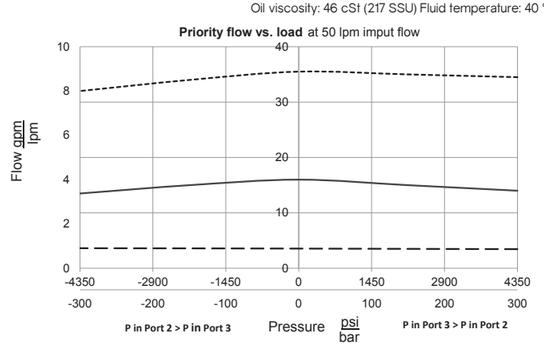

F12C-32F

Inches
Millimeters

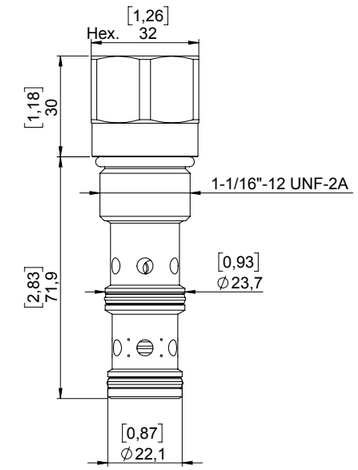

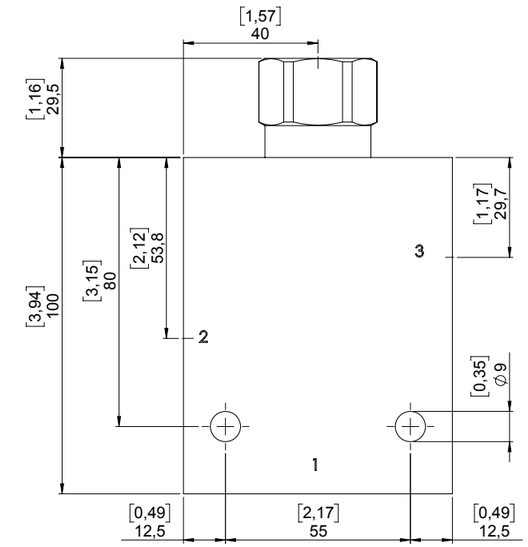

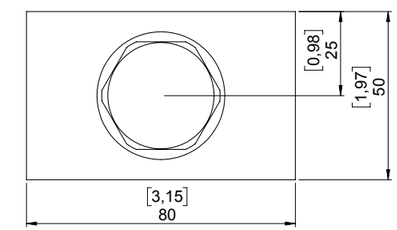

STANDARD HOUSING

Ordering code:	See page 9.04.002
Material:*	Aluminium/Steel Max working pressure for aluminum body: 210 bar Max working pressure for steel body: 350 bar

**Note:* To correctly select the material, in relation to application, see page S.003.

Ordering code

F12C-32F -

Seals
- None (std. NBR+Polyurethane)
- **Y**- Polyurethane
- For other options contact Sales dept.

Regulated flow
- **1** - 1 l/min (0,26 gpm)
- **2,5** - 2,5 l/min (0,66 gpm)
- **2,8** - 2,8 l/min (0,74 gpm)
- **3,5** - 3,5 l/min (0,92 gpm)
- **5** - 5 l/min (1,32 gpm)
- **10** - 10 l/min (2,64 gpm)
- **15** - 15 l/min (3,96 gpm)
- **22** - 22 l/min (5,81 gpm)

Housing size ports
- None (std. only cartridge)
- **3B**- 3/8" BSP
- **4B**- 1/2" BSP
- **3S**- SAE 8
- **4S**- SAE 10

Material std. housing
- **A**- Aluminium
- **S**- Steel

FD10C-33 Flow divider and combiner

Description

3 ways spool type flow divider and combiner.

Operation mode

The flow divider cartridge will divert inlet flow from port 3 to ports 2 and 4, based on the indicated spool selection, regardless of working pressure. When the flow direction is reversed the valve will combine flows from 2 and 4 to port 3.

The flow is syncronized in both functions dividing and combining modes in blocked conditions in motor applications as well as at end stroke conditions in cylinder applications.

GENERAL DATA

Weight: 0,12 Kg (0,26 lbs).

Ambient temperature range: -30 °C a 60 °C with standard seals (NBR) and Polyurethane.

Max. proof pressure: 420 bar (6.090 psi).

Flow Max: 57 l/min (15,06 gpm).

Cartridge materials: high strength steel, internal parts hardened and grinding.

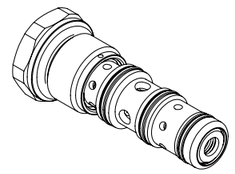

Drawing

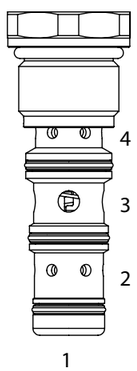

Hydraulic symbol

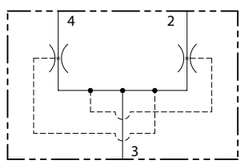

TECHNICAL DATA

HYDRAULIC

Max. working pressure:	350 bar (5.075 psi)
Flow rate:	57 l/min (15,06 gpm)
Fluid: *Viscosity:*	Mineral based oil From 15cSt to 250 cSt
Flow Accuracy:	10% of inlet flow
Standard seals:	O-ring NBR Seal Polyurethane
Cavity:	SCN1040
Installation torque:	40 Nm
Max contamination level:	NAS 8 ISO 4406 19/17/14
Fluid temperature range:	From -20 °C to +80 °C
Seals kit std.:	5AG0050

Pressure drop

Oil viscosity: 46 cSt (217 SSU) Fluid temperature: 40 °C

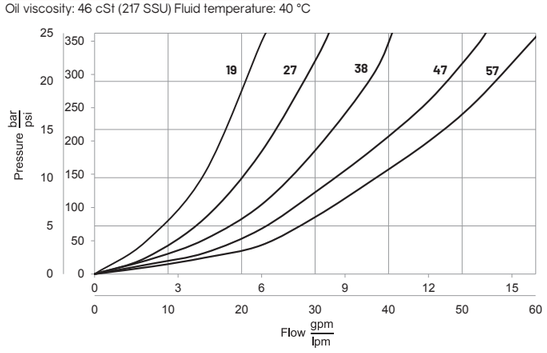

FD10C-33

Inches
Millimeters

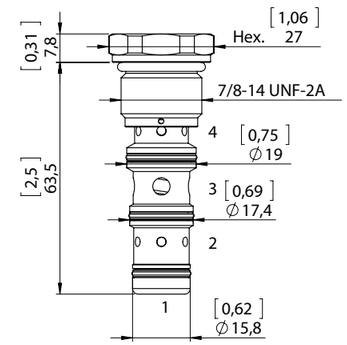

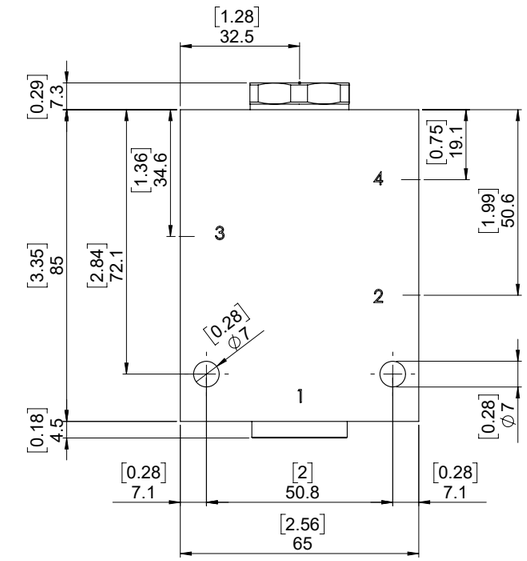

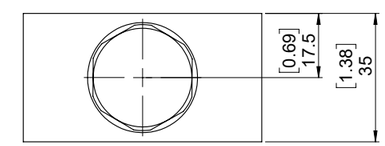

STANDARD HOUSING

Ordering code:	See page 9.03.005
Material:*	Aluminium/Steel Max working pressure for aluminum body: 210 bar Max working pressure for steel body: 350 bar

***Note:** To correctly select the material, in relation to application, see page S.003.

Ordering code

FD10C-33 A- - -

Seals
- None (std. NBR+Polyurethane)
- **Y**- Polyurethane
- For other options contact Sales dept.

Flow Division
- 50% - 50%

Flow Range

	l/min - gpm
19	4-19 l/min (1-5 gpm)
27	5,5-27 l/min (1,5-7 gpm)
38	9,5-38 l/min (2,5-10 gpm)
45	15-45 l/min (4-12 gpm)
57	19-57 l/min (5-15 gpm)

Material std. housing
- **A**- Aluminium
- **S**- Steel

Housing size ports
- **3B**- 3/8" BSP
- **4B**- 1/2" BSP
- **3S**- SAE 8
- **4S**- SAE 10

FD12C-33 Flow divider and combiner

Description

3 ways spool type flow divider and combiner.

Operation mode

The flow divider cartridge will divert inlet flow from port 3 to ports 2 and 4, based on the indicated spool selection, regardless of working pressure.

When the flow direction is reversed the valve will combine flows from 2 and 4 to port 3. The flow is syncronized in both functions dividing and combining modes in blocked conditions in motor applications as well as at end stroke conditions in cylinder applications.

GENERAL DATA

Weight: 0,16 Kg (0,35 lbs).
Ambient temperature range: -30 °C a 60 °C with standard seals (NBR).
Max. proof pressure: 420 bar (6.090 psi).
Flow Max: 90 l/min (23,8 gpm).
Cartridge materials: high strength steel, internal parts hardened and grinding.

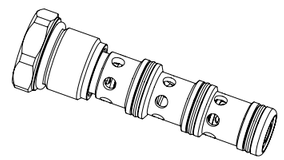

Drawing

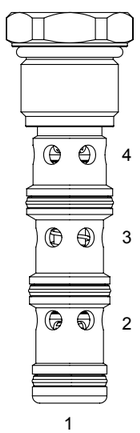

Hydraulic symbol

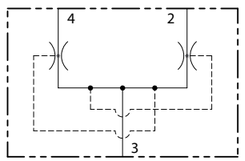

TECHNICAL DATA

HYDRAULIC

Max. working pressure:	350 bar (5.075 psi)
Flow rate:	90 l/min (23,8 gpm)
Fluid: *Viscosity:*	Mineral based oil From 15cSt to 250 cSt
Flow Accuracy:	10%
Standard seals:	O-ring NBR Seal Polyurethane
Cavity:	SCN1240
Installation torque:	60 Nm
Max contamination level:	NAS 8 ISO 4406 19/17/14
Fluid temperature range:	From -20 °C to +80 °C
Seals kit std.:	5AG0052

Pressure drop

Oil viscosity: 46 cSt (217 SSU) Fluid temperature: 40 °C

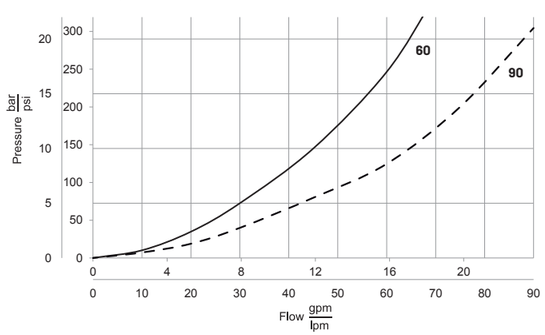

FD12C-33

Inches
Millimeters

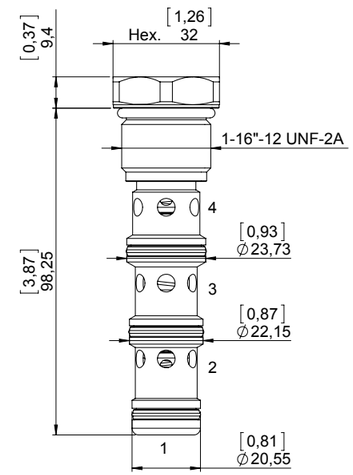

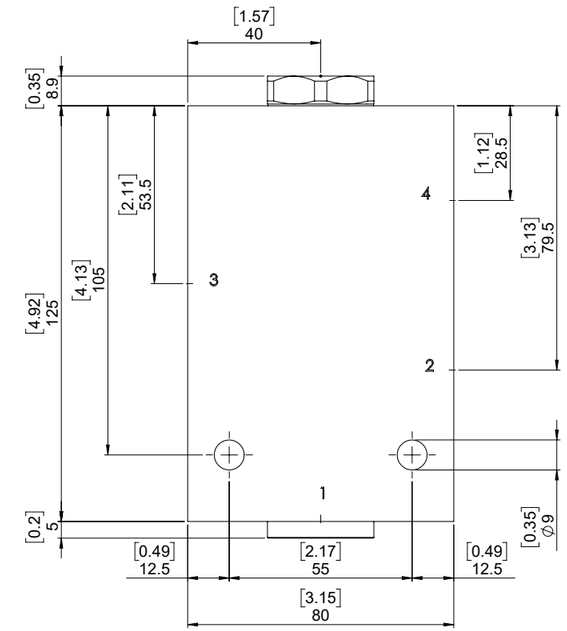

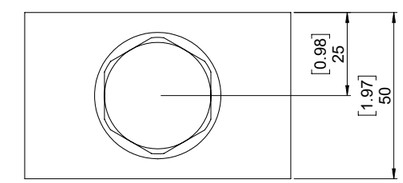

STANDARD HOUSING

Ordering code:	See page 9.04.004
Material:*	Aluminium/Steel Max working pressure for aluminum body: 210 bar Max working pressure for steel body: 350 bar

**Note:* To correctly select the material, in relation to application, see page S.003.

Ordering code

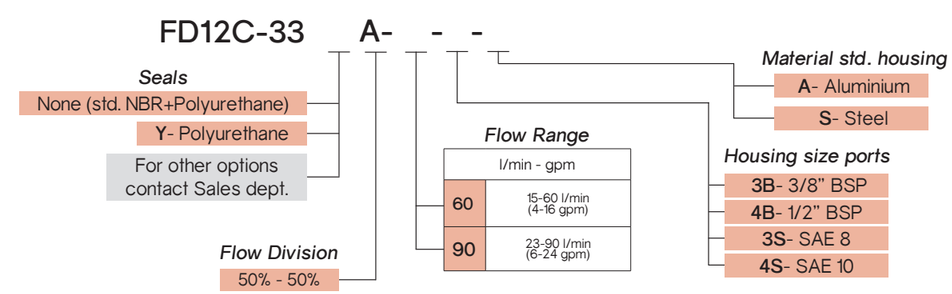

FD16C-33 Flow divider and combiner

Description

3 way spool type flow divider and combine.

Operation mode

The flow divider cartridge will divert inlet flow from port 3 to ports 2 and 4, based on the indicated spool selection, regardless of working pressure.
When the flow direction is reversed the valve will combine flows from 2 and 4 to port 3. The flow is syncronized in both functions dividing and combining modes in blocked conditions in motor applications as well as at end stroke conditions in cylinder applications.

GENERAL DATA

Weight: 0,27 Kg (0,59 lbs).
Ambient temperature range: -30 °C a 60 °C with standard seals (NBR).
Max. proof pressure: 420 bar (6.090 psi).
Flow Max: 200 l/min (52,84 gpm).
Cartridge materials: high strength steel, internal parts hardened and grinding.

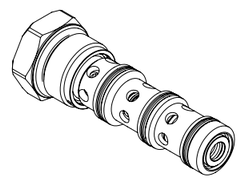

Drawing

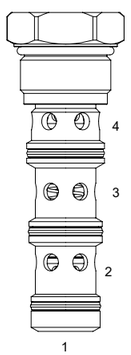

Hydraulic symbol

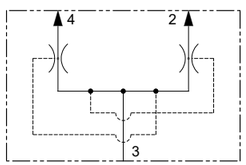

TECHNICAL DATA

HYDRAULIC

Max. working pressure:	350 bar (5.075 psi)
Flow rate:	200 l/min (52,84 gpm)
Fluid: *Viscosity:*	Mineral based oil From 15cSt to 250 cSt
Flow Accuracy:	10% of inlet flow
Standard seals:	O-ring NBR Seal Polyurethane
Cavity:	SCN1640
Installation torque:	130 Nm
Max contamination level:	NAS 8 ISO 4406 19/17/14
Fluid temperature range:	From -20 °C to +80 °C
Seals kit std.:	5AG0053

Pressure drop

Oil viscosity: 46 cSt (217 SSU) Fluid temperature: 40 °C

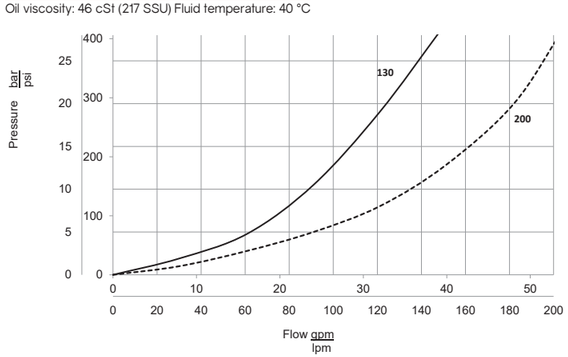

FD16C-33

Inches
Millimeters

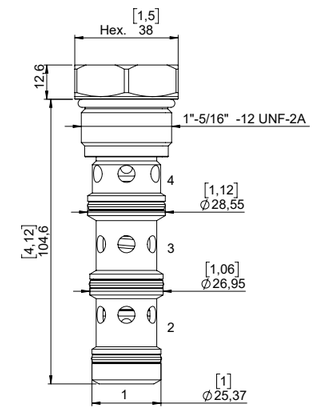

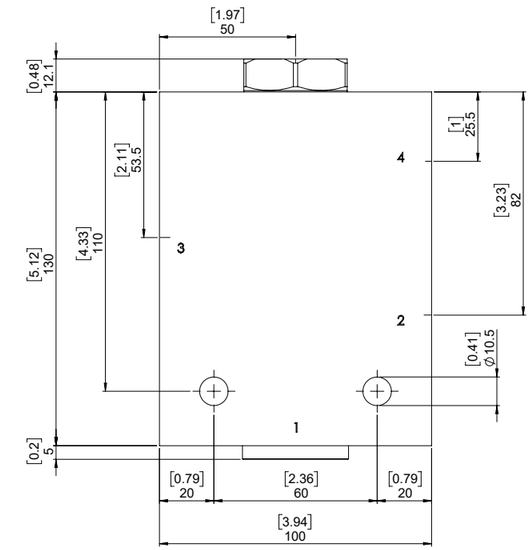

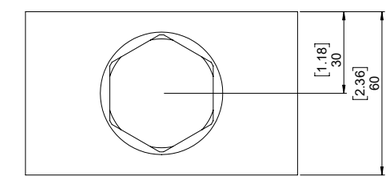

STANDARD HOUSING

Ordering code:	See page 9.05.003
Material:*	Aluminium/Steel Max working pressure for aluminum body: 210 bar Max working pressure for steel body: 350 bar

**Note:* To correctly select the material, in relation to application, see page S.003.

Ordering code

FD16C-33 A- - -

Seals
- None (std. NBR+Polyurethane)
- **Y**- Polyurethane
- For other options contact Sales dept.

Flow Division
- 50% - 50%

Flow Range

	l/min - gpm
130	40-130 l/min (10,56-34,34 gpm)
170	60-170 l/min (15,85 -44,90 gpm)
200	70-200 l/min (18,49 - 52,83 gpm)

Material std. housing
- **A**- Aluminium
- **S**- Steel

Housing size ports
- **6B**- 1" BSP
- **6S**- SAE 16

L08S-3300-0

Logic element 3 way piloted, spool-type, normally closed

Description

Logic element cartridge valve, spool type, hydraulic directional element, with multifunction, when used with other device, can work as flow or pressure control.

Operation mode

Logic element spring-based, spool will shift to allow full flow from 1 to 2 only when pressure at 1 exceeds the cumulative pressure of 3, plus the spring pressure value.
Pilot-to-close directional valve. With no pressure at 3, flow will be allowed from 1 to 2 once the spring force is overcome by pressure at 1.

GENERAL DATA

Weight: 0,68 Kg (1,5 lbs).
Ambient temperature: -30 °C a 60 °C with seals standard (NBR).
Max proof pressure: 420 bar (6.090 psi).
Flow Max: 30 l/min (8 gpm).
Cartridge materials: high strength steel, internal parts hardened and grinding.

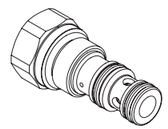

Drawing

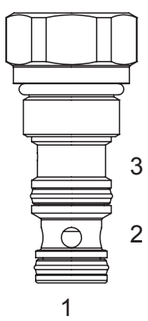

Hydraulic symbol

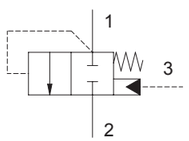

TECHNICAL DATA

HYDRAULIC	
Max. working pressure:	350 bar (5.075 psi)
Flow rate:	See performance graph
Fluid: *Viscosity:*	Mineral based oil From 15cSt to 250 cSt
Leakage:	150 cc/min P max. 350 bar (5.075 psi)
Standard seals:	O-ring NBR Backup ring Polyurethane
Cavity:	SCN0830
Installation torque:	30 Nm
Max contamination level:	NAS 8 ISO 4406 19/17/14
Fluid temperature range:	From -30 °C to +60 °C
Seals kit std.:	5AG0049

Pressure drop

Oil viscosity: 46 cSt (217 SSU) Fluid temperature: 40 °C

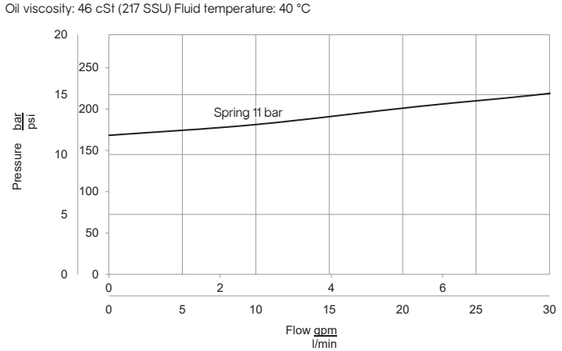

L08S-3300-0

Inches
Millimeters

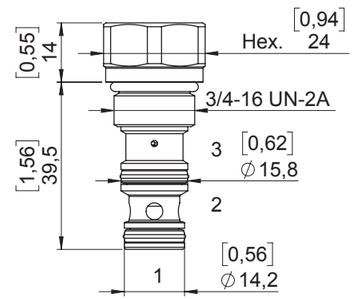

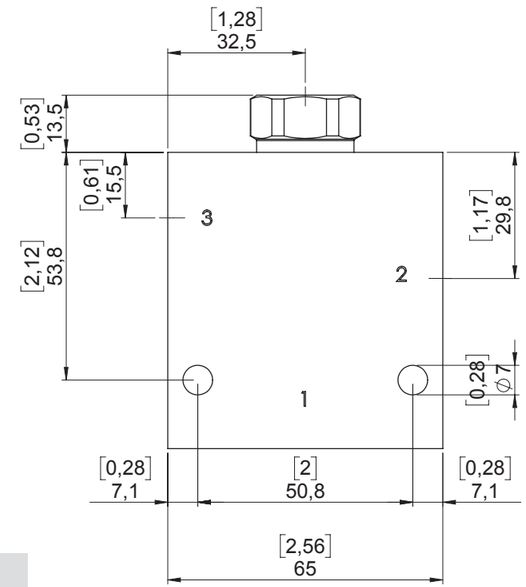

STANDARD HOUSING

Ordering code:	See page 9.02.002
Material:*	Aluminium/Steel Max working pressure for aluminum body: 210 bar Max working pressure for steel body: 350 bar

**Note:* To correctly select the material, in relation to application, see page S.003.

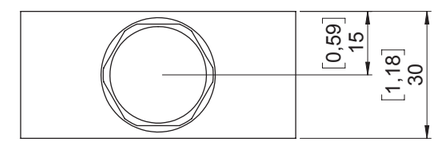

Ordering code

L08S-3300-0 -

Seals
- None (std. NBR+Polyurethane)
- **Y**- Polyurethane
- For other options contact Sales dept.

Spring
- **C**- 2,5 bar (36 psi)
- **E**- 5,5 bar (80 psi)
- **G**- 7 bar (101 psi)
- **L**- 11 bar (159 psi)
- **N**- 16 bar (232 psi)

Material std. housing
- **A**- Aluminium
- **S**- Steel

Housing size ports
- None (std. only cartridge)
- **2B**- 1/4" BSP
- **3B**- 3/8" BSP
- **2S**- SAE 6
- **3S**- SAE 8

L08S-3301-4

Logic element 3 way piloted, spool-type, normally open

Description

Logic element cartridge valve, spool type, hydraulic directional element, with multifunction, when used with other device, it can work as flow or pressure control.

Operation mode

Logic element spring-based, the spool allows full flow from 2 to 3 till the pressure in 1 exceeds the cumulative pressure of 3, plus the spring pressure value.
Pilot-to-open directional valve.

GENERAL DATA

Weight: 0,07 Kg (0,09 lbs).
Ambient temperature: -30 °C a 60 °C with seals standard (NBR).
Max proof pressure: 420 bar (6.090 psi).
Flow Max: 20 l/min (5,3 gpm).
Cartridge materials: high strength steel, internal parts hardened and grinding.

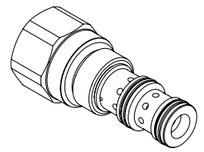

Drawing

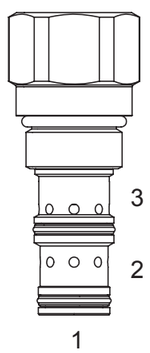

Hydraulic symbol

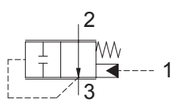

TECHNICAL DATA

HYDRAULIC

Max. working pressure:	350 bar (5.075 psi)
Flow rate:	See performance graph
Fluid: *Viscosity:*	Mineral based oil From 15cSt to 250 cSt
Leakage:	150 cc/min P max. 350 bar (5.075 psi)
Standard seals:	O-ring NBR Backup ring Polyurethane
Cavity:	SCN0830
Installation torque:	30 Nm
Max contamination level:	NAS 8 ISO 4406 19/17/14
Fluid temperature range:	From -30 °C to +60 °C
Seals kit std.:	5AG0021

Pressure drop

Oil viscosity: 46 cSt (217 SSU) Fluid temperature: 40 °C

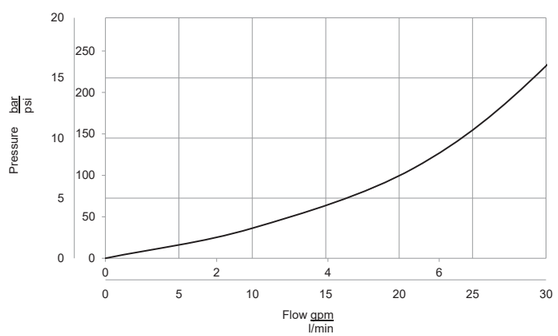

L08S-3301-4

Inches
Millimeters

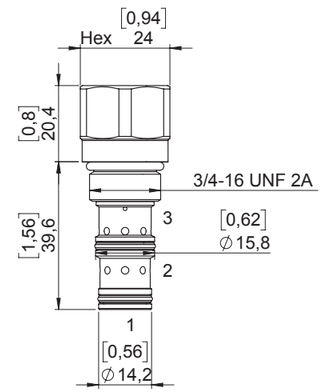

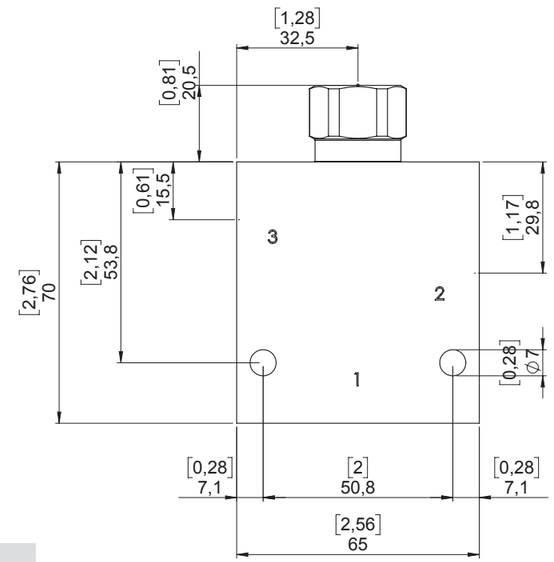

STANDARD HOUSING

Ordering code:	See page 9.02.002
Material:*	Aluminium/Steel Max working pressure for aluminum body: 210 bar Max working pressure for steel body: 350 bar

**Note:* To correctly select the material, in relation to application, see page S.003.

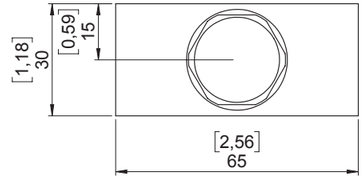

Ordering code

L08S-3301-4 -

Seals
- None (std. NBR+Polyurethane)
- **Y**- Polyurethane
- For other options contact Sales dept.

Spring
- **C**- 2,5 bar (36 psi)
- **E**- 5,5 bar (80 psi)
- **G**- 7 bar (101 psi)
- **L**- 11 bar (159 psi)
- **N**- 16 bar (232 psi)

Material std. housing
- **A**- Aluminium
- **S**- Steel

Housing size ports
- None (std. only cartridge)
- **2B**- 1/4" BSP
- **3B**- 3/8" BSP
- **2S**- SAE 6
- **3S**- SAE 8

L10S-3301-4

Logic element 3 way piloted, spool-type, normally open

Description

Logic element cartridge valve, spool type, hydraulic directional element, with multifunction, when used with other device, can work as flow or pressure control.

Operation mode

Logic element spring-based, the spool allows full flow from 2 to 3 till the pressure in 1 exceeds the cumulative pressure of 3, plus the spring pressure value.
Pilot-to-open directional valve.

GENERAL DATA

Weight: 0,14 Kg (0,32 lbs).
Ambient temperature: -30 °C a 60 °C with seals standard (NBR).
Max proof pressure: 350 bar (6.090 psi).
Flow Max: 40 l/min (10,7 gpm).
Cartridge materials: high strength steel, internal parts hardened and grinding.

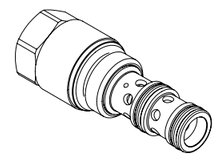

Drawing

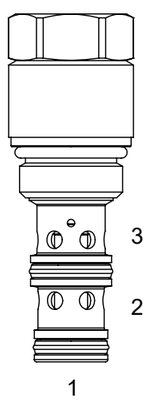

Hydraulic symbol

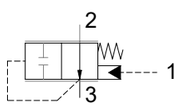

TECHNICAL DATA

HYDRAULIC	
Max. working pressure:	350 bar (5.075 psi)
Flow rate:	See performance graph
Fluid: *Viscosity:*	Mineral based oil From 15cSt to 250 cSt
Leakage:	200 cc/min P max. 350 bar (5.075 psi)
Standard seals:	O-ring NBR Backup ring Polyurethane
Cavity:	SCN1030
Installation torque:	40 Nm
Max contamination level:	NAS 8 ISO 4406 19/17/14
Fluid temperature range:	From -20 °C to +80 °C
Seals kit std.:	5AG0017

Pressure drop

Oil viscosity: 46 cSt (217 SSU) Fluid temperature: 40 °C

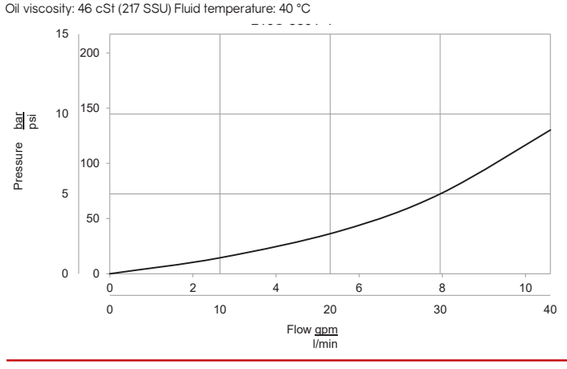

L10S-3301-4

Inches
Millimeters

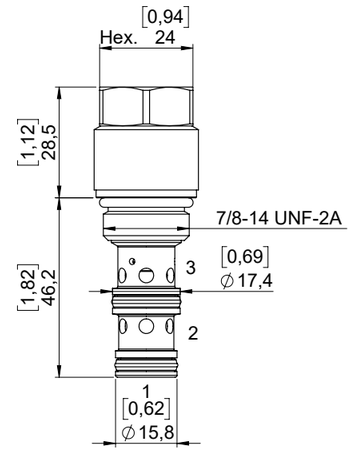

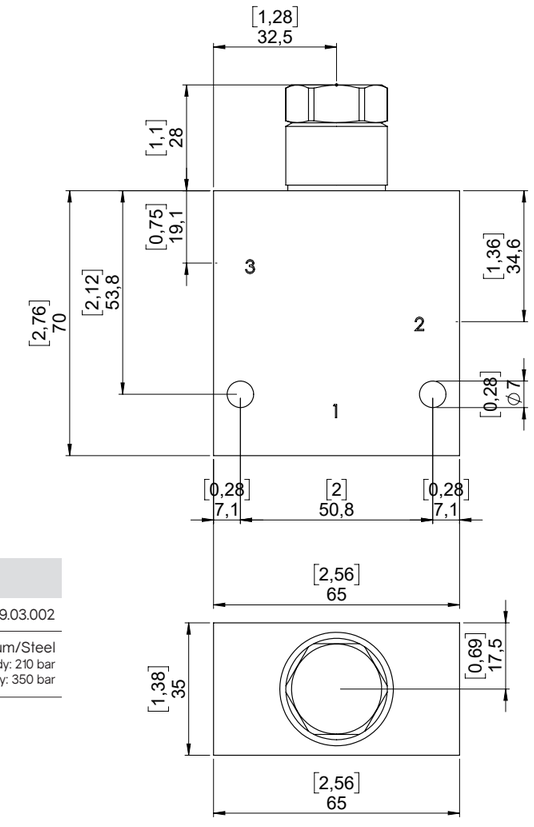

STANDARD HOUSING

Ordering code:	See page 9.03.002
Material:*	Aluminium/Steel Max working pressure for aluminum body: 210 bar Max working pressure for steel body: 350 bar

**Note:* To correctly select the material, in relation to application, see page S.003.

Ordering code

L10S-3301-4 -

Seals
- None (std. NBR+Polyurethane)
- **Y**- Polyurethane
- For other options contact Sales dept.

Spring
- **C**- 2,5 bar (36 psi)
- **E**- 5,5 bar (80 psi)
- **G**- 7 bar (101 psi)
- **L**- 11 bar (159 psi)
- **N**- 16 bar (232 psi)

Material std. housing
- **A**- Aluminium
- **S**- Steel

Housing size ports
- None (std. only cartridge)
- **3B**- 3/8" BSP
- **4B**- 1/2" BSP
- **3S**- SAE 8
- **4S**- SAE 10

L10S-3C00-0

Logic element 3 ways piloted, spool-type, normally closed

Description

Logic element cartridge valve, spool type, hydraulic directional element, with multifunction, when used with other device, can work as flow or pressure control.

Operation mode

Logic element spring-based, spool will shift to allow full flow from 1 to 2 only when pressure at 1 exceeds the cumulative pressure of 3, plus the spring pressure value.

Pilot-to-close directional valve. With no pressure at 3, flow will be allowed from 1 to 2 once the spring force is overcome by pressure at 1.

GENERAL DATA

Weight: 0,14 Kg (0,32 lbs).
Ambient temperature: -30 °C a 60 °C with seals standard (NBR).
Max proof pressure: 420 bar (6.090 psi).
Flow Max: 70 l/min (18,7 gpm).
Cartridge materials: high strength steel, internal parts hardened and grinding.

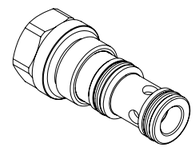

TECHNICAL DATA

HYDRAULIC	
Max. working pressure:	350 bar (5.075 psi)
Flow rate:	See performance graph
Fluid: *Viscosity:*	Mineral based oil From 15cSt to 250 cSt
Leakage:	200 cc/min P max. 350 bar (5.075 psi)
Standard seals:	O-ring NBR Backup ring Polyurethane
Cavity:	SCS1030
Installation torque:	40 Nm
Max contamination level:	NAS 8 ISO 4406 19/17/14
Fluid temperature range:	From -20 °C to +80 °C
Seals kit std.:	5AG0016

Drawing

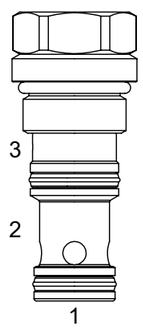

Hydraulic symbol

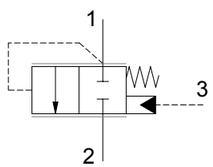

Pressure drop

Oil viscosity: 46 cSt (217 SSU) Fluid temperature: 40 °C

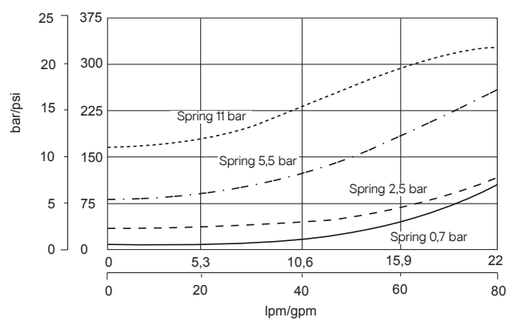

Performance graph

Oil viscosity: 46 cSt (217 SSU) Fluid temperature: 40 °C

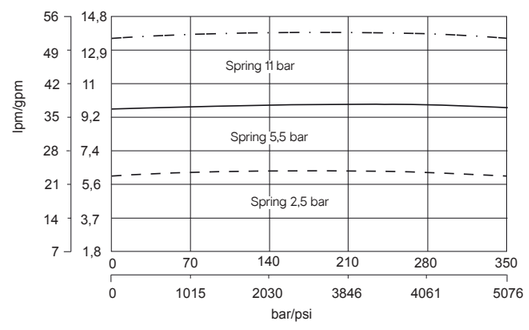

L10S-3C00-0

Inches
Millimeters

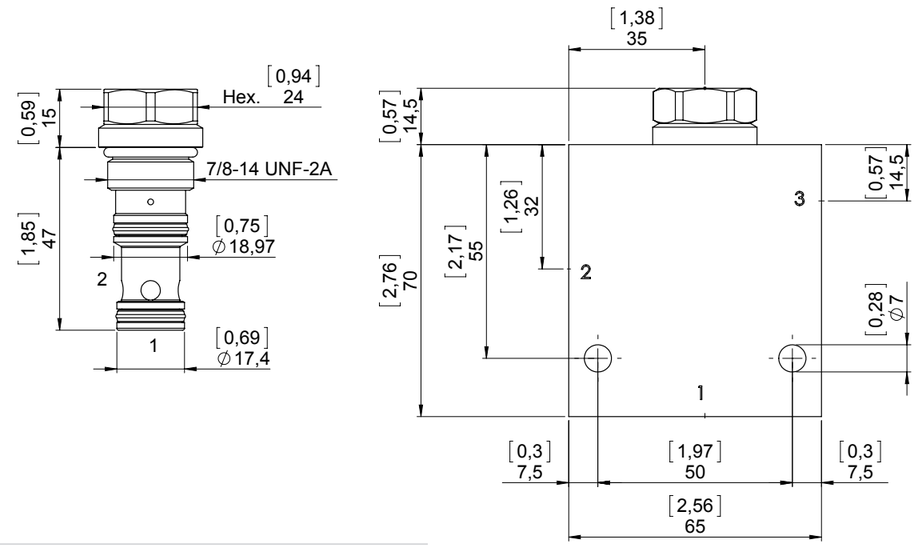

STANDARD HOUSING

Ordering code:	See page 9.03.003
Material:*	Aluminium/Steel Max working pressure for aluminum body: 210 bar Max working pressure for steel body: 350 bar

**Note:* To correctly select the material, in relation to application, see page S.003.

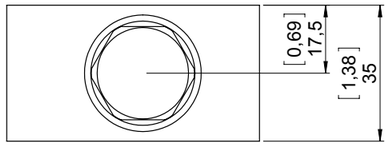

Ordering code

L10S-3C00-0 -

Seals
- None (std. NBR+Polyurethane)
- **Y**- Polyurethane
- For other options contact Sales dept.

Spring
- **C**- 2,5 bar (36 psi)
- **E**- 5,5 bar (80 psi)
- **G**- 7 bar (101 psi)
- **L**- 11 bar (159 psi)
- **N**- 16 bar (232 psi)

Material std. housing
- **A**- Aluminium
- **S**- Steel

Housing size ports
- None (std. only cartridge)
- **3B**- 3/8" BSP
- **4B**- 1/2" BSP
- **3S**- SAE 8
- **4S**- SAE 10

L10P-3C00-3

Logic element 3 way piloted, poppet type

Description

Logic element cartridge valve poppet type, Bi-Directional normally closed.

Operation mode

The logic element will block port 1 to 2 or 2 to 1 until pressure at port 1 or 2 exceeds pressure at port 3 plus spring.
No pressure on port 3 will allow flow from port 1 to 2 or 2 to 1 when pressure is higher than spring force. Te ratio of areas between ports 1 and 2 is 1:1 and the ratio of areas between ports 1 or 2 and 3 is 1:2.

GENERAL DATA

Weight: 0,32 Kg (0,7 lbs).
Ambient temperature: -30 °C a 60 °C with seals standard (NBR).
Max proof pressure: 420 bar (6.090 psi).
Flow Max: 70 l/min (18,5 gpm).
Cartridge materials: high strength steel, internal parts hardened and grinding.

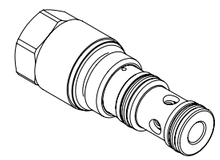

Drawing

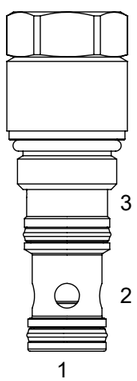

Hydraulic symbol

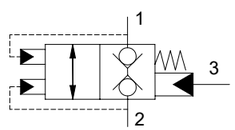

TECHNICAL DATA

HYDRAULIC

Max. working pressure:	350 bar (5.075 psi)
Flow rate:	See performance graph
Fluid: *Viscosity:*	Mineral based oil From 15cSt to 250 cSt
Leakage:	0,5 cc/min P max. 350 bar (5.075 psi)
Standard seals:	O-ring NBR Backup ring Polyurethane
Cavity:	SCS1030
Installation torque:	40 Nm
Max contamination level:	NAS 8 ISO 4406 19/17/14
Fluid temperature range:	From -20 °C to +80 °C
Seals kit std.:	5AG0016

Pressure drop

Oil viscosity: 46 cSt (217 SSU) Fluid temperature: 40 °C

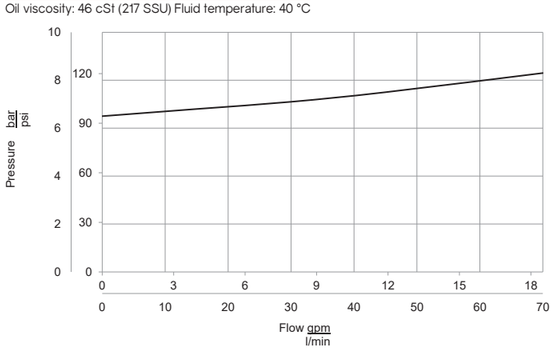

L10P-3C00-3

Inches
Millimeters

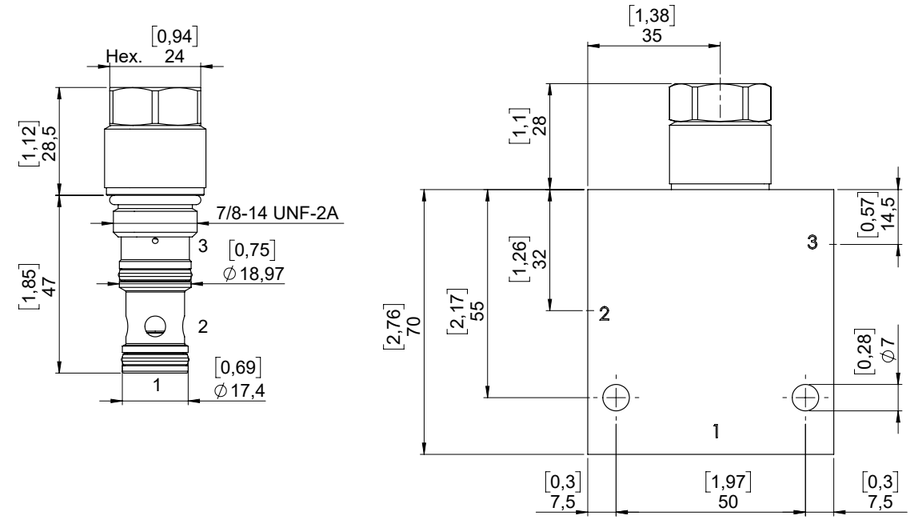

STANDARD HOUSING

Ordering code:	See page 9.03.003
Material:*	Aluminium/Steel Max working pressure for aluminum body: 210 bar Max working pressure for steel body: 350 bar

**Note:* To correctly select the material, in relation to application, see page S.003.

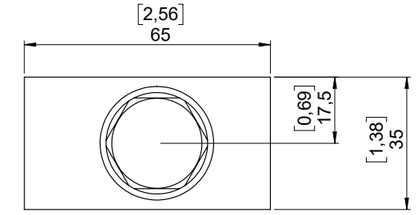

Ordering code

L10P-3C00-3 -

Seals
- None (std. NBR+Polyurethane)
- **Y**- Polyurethane
- For other options contact Sales dept.

Spring
- **C**- 2,5 bar (36 psi)
- **E**- 5,5 bar (80 psi)
- **G**- 7 bar (101 psi)
- **L**- 11 bar (159 psi)
- **N**- 16 bar (232 psi)

Material std. housing
- **A**- Aluminium
- **S**- Steel

Housing size ports
- None (std. only cartridge)
- **3B**- 3/8" BSP
- **4B**- 1/2" BSP
- **3S**- SAE 8
- **4S**- SAE 10

L12S-3301-4

Logic element 3 way piloted, spool-type, normally open

Description

Logic element cartridge valve, spool type, hydraulic directional element, with multifunction, when used with other device, can work as flow or pressure control.

Operation mode

Logic element spring-based, the spool allows full flow from 2 to 3 till the pressure in 1 exceeds the cumulative pressure of 3, plus the spring pressure value.
Pilot-to-open directional valve.

GENERAL DATA

Weight: 0,14 Kg (0,32 lbs).
Ambient temperature: -30 °C a 60 °C with seals standard (NBR).
Max proof pressure: 350 bar (6.090 psi).
Flow Max: 40 l/min (10,7 gpm).
Cartridge materials: high strength steel, internal parts hardened and grinding.

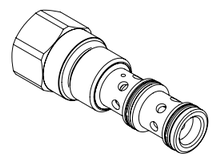

Drawing

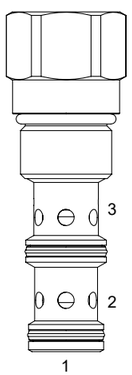

Hydraulic symbol

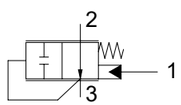

TECHNICAL DATA

HYDRAULIC

Max. working pressure:	350 bar (5.075 psi)
Flow rate:	See performance graph
Fluid: *Viscosity:*	Mineral based oil From 15cSt to 250 cSt
Leakage:	200 cc/min P max. 350 bar (5.075 psi)
Standard seals:	O-ring NBR Backup ring Polyurethane
Cavity:	SCN1030
Installation torque:	40 Nm
Max contamination level:	NAS 8 ISO 4406 19/17/14
Fluid temperature range:	From -20 °C to +80 °C
Seals kit std.:	5AG0054

Pressure drop

Oil viscosity: 46 cSt (217 SSU) Fluid temperature: 40 °C

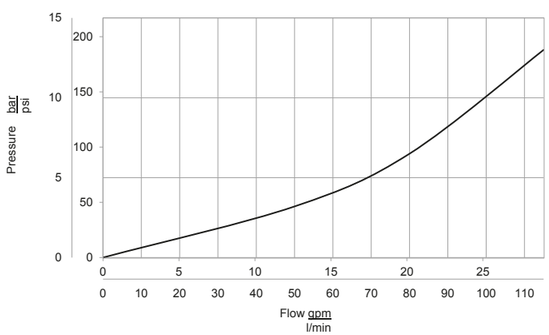

L12S-3301-4

Inches
Millimeters

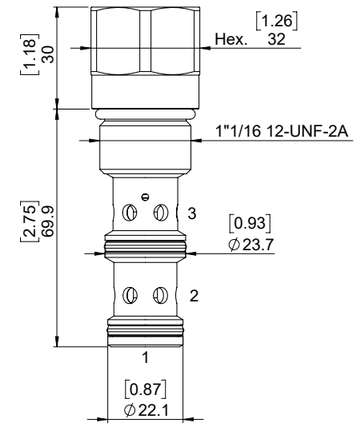

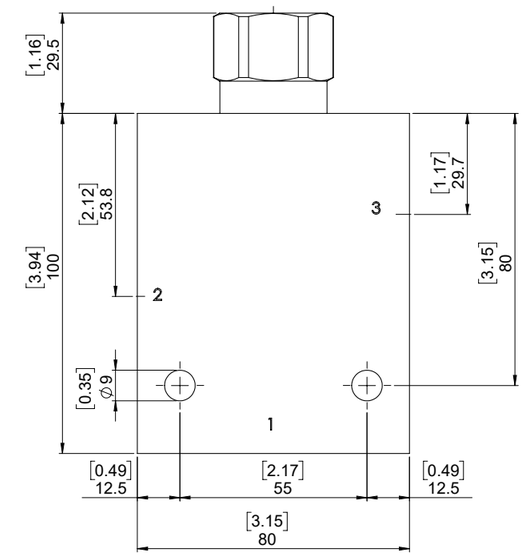

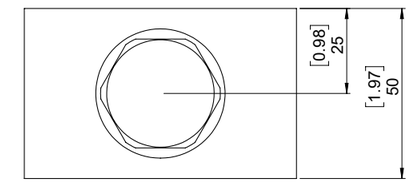

STANDARD HOUSING

Ordering code:	See page 9.04.003
Material:*	Aluminium/Steel Max working pressure for aluminum body: 210 bar Max working pressure for steel body: 350 bar

**Note:* To correctly select the material, in relation to application, see page S.003.

Ordering code

L12S-3301-4 -

Seals
- None (std. NBR+Polyurethane)
- **Y**- Polyurethane
- For other options contact Sales dept.

Spring
- **C**- 2,5 bar (36 psi)
- **E**- 5,5 bar (80 psi)
- **G**- 7 bar (101 psi)
- **L**- 11 bar (159 psi)
- **N**- 16 bar (232 psi)

Material std. housing
- **A**- Aluminium
- **S**- Steel

Housing size ports
- None (std. only cartridge)
- **4B**- 1/2" BSP
- **5B**- 3/4" BSP
- **4S**- SAE 10
- **5S**- SAE 12

L12S-3C00-0

Logic element 3 ways piloted, spool-type, normally closed

Description

Logic element cartridge valve, spool type, hydraulic directional element, with multifunction, when used with other device, can work as flow or pressure control.

Operation mode

Logic element spring-based, spool will shift to allow full flow from 1 to 2 only when pressure at 1 exceeds the cumulative pressure of 3, plus the spring pressure value.

Pilot-to-close directional valve. With no pressure at 3, flow will be allowed from 1 to 2 once the spring force is overcome by pressure at 1.

GENERAL DATA

Weight: 0,19 Kg (0,32 lbs).
Ambient temperature: -30 °C a 60 °C with seals standard (NBR).
Max proof pressure: 420 bar (6.090 psi).
Flow Max: 150 l/min (39,63 gpm).
Cartridge materials: high strength steel, internal parts hardened and grinding.

Drawing

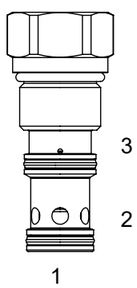

Hydraulic symbol

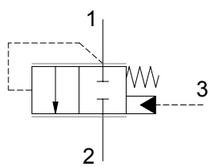

TECHNICAL DATA

HYDRAULIC

Max. working pressure:	350 bar (5.075 psi)
Flow rate:	See performance graph
Fluid: *Viscosity:*	Mineral based oil From 15cSt to 250 cSt
Leakage:	300 cc/min P max. 350 bar (5.075 psi)
Standard seals:	O-ring NBR Backup ring Polyurethane
Cavity:	SCS1230
Installation torque:	45 Nm
Max contamination level:	NAS 8 ISO 4406 19/17/14
Fluid temperature range:	From -20 °C to +80 °C
Seals kit std.:	5AG0054

Pressure drop

Oil viscosity: 46 cSt (217 SSU) Fluid temperature: 40 °C

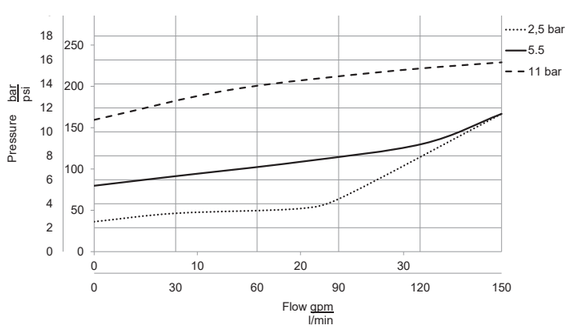

Performance graph

Oil viscosity: 46 cSt (217 SSU) Fluid temperature: 40 °C

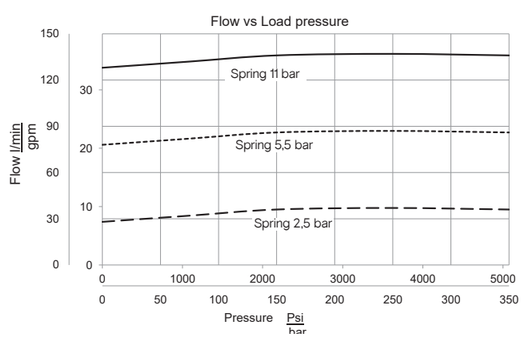

L12S-3C00-0

Inches
Millimeters

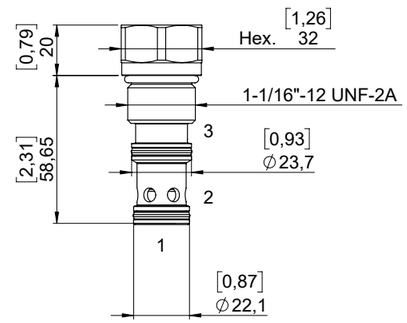

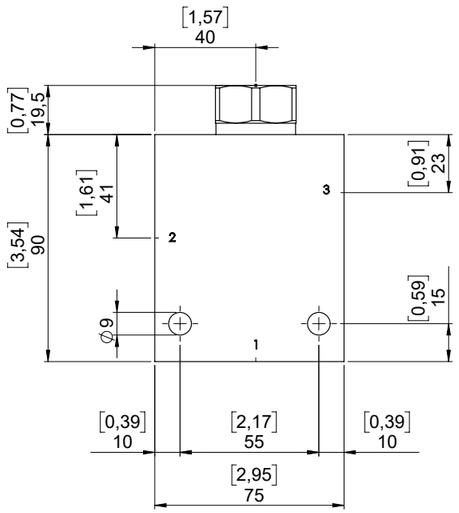

STANDARD HOUSING

Ordering code:	See page 9.04.003
Material:*	Aluminium/Steel Max working pressure for aluminum body: 210 bar Max working pressure for steel body: 350 bar

**Note:* To correctly select the material, in relation to application, see page S.003.

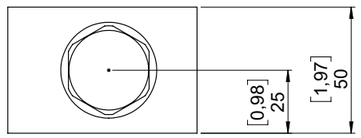

Ordering code

L12S-3C00-0 -

Seals
- None (std. NBR+Polyurethane)
- **Y**- Polyurethane
- For other options contact Sales dept.

Spring
- **C**- 2,5 bar (36 psi)
- **E**- 5,5 bar (80 psi)
- **G**- 7 bar (101 psi)
- **L**- 11 bar (159 psi)
- **N**- 16 bar (232 psi)

Material std. housing
- **A**- Aluminium
- **S**- Steel

Housing size ports
- None (std. only cartridge)
- **4B**- 1/2" BSP
- **5B**- 3/4" BSP
- **4S**- SAE 10
- **5S**- SAE 12

L16S-3C00-0

Logic element 3 way piloted, spool-type, normally closed

Description

Logic element cartridge valve, spool type, hydraulic directional element, with multifunction, when used with other device, can work as flow or pressure control.

Operation mode

Logic element spring-based, spool with shift to allow full flow from 1 to 2 only when pressure at 1 exceeds the cumulative pressure of 3, plus the spring pressure value.

Pilot-to-close directional valve. With no pressure at 3, flow will be allowed from 1 to 2 once the spring force is overcome by pressure at 1.

GENERAL DATA

Weight: 0,32 Kg (0,7 lbs).
Ambient temperature range: -30 C° a 60 C° with standard seals (NBR).
Max. proof pressure: 420 bar (6.090 psi).
Flow Max: 200 l/min (52,8 gpm).
Cartridge materials: high strength steel, internal parts hardened and grinding.

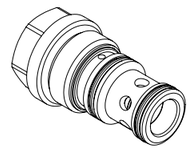

Drawing

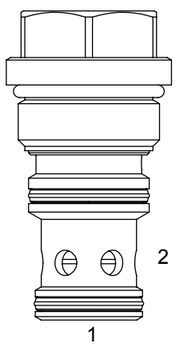

Hydraulic symbol

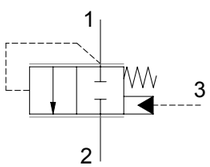

TECHNICAL DATA

HYDRAULIC

Max. working pressure:	350 bar (5.075 psi)
Flow rate:	See performance graph
Fluid: *Viscosity:*	Mineral based oil From 15cSt to 250 cSt
Leakage:	350 cc/min P max. 350 bar (5.075 psi)
Standard seals:	O-ring NBR Back-up ring Polyurethane
Cavity:	SCS1630
Installation torque:	65 N/m
Max contamination level:	NAS 8 ISO 4406 19/17/14
Fluid temperature range:	From -20 °C to +80 °C
Seals kit std.:	5AG0055

Pressure drop

Oil viscosity: 46 cSt (217 SSU) Fluid temperature: 40 °C

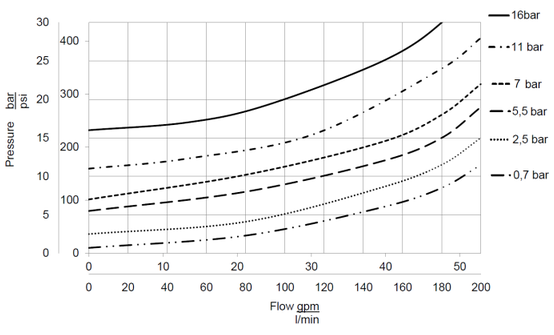

Performance graph

Oil viscosity: 46 cSt (217 SSU) Fluid temperature: 40 °C

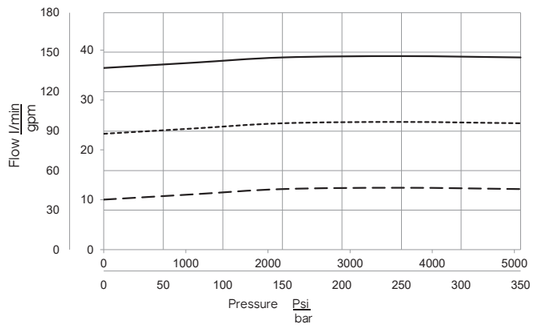

L16S-3C00-0

Inches
Millimeters

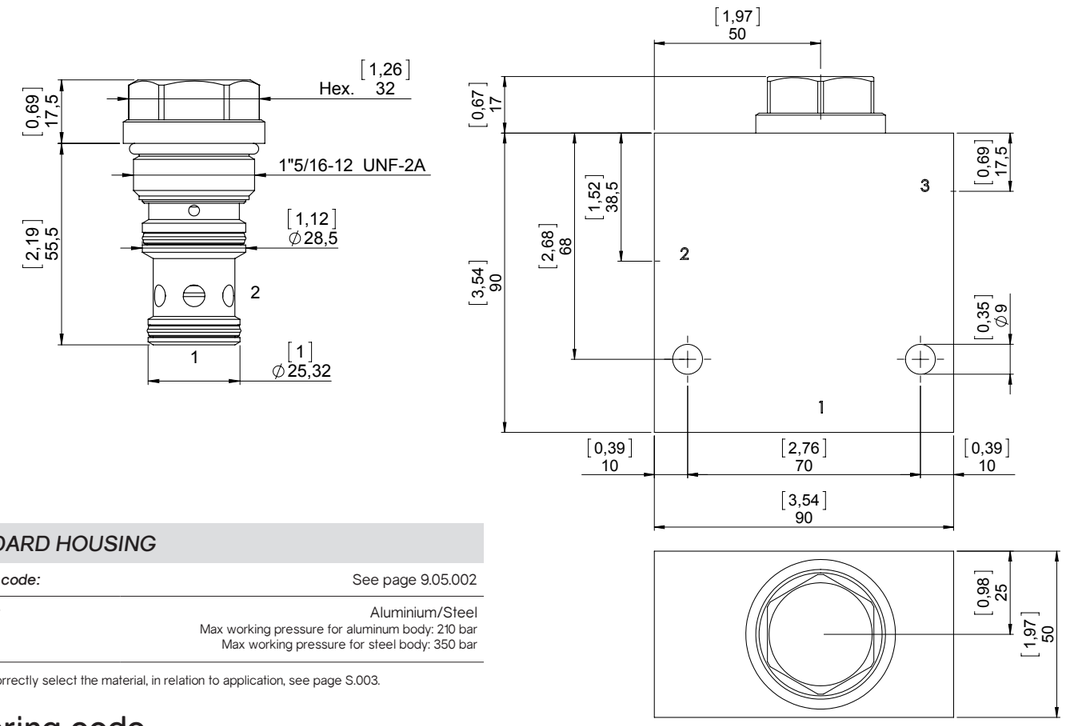

STANDARD HOUSING

Ordering code:	See page 9.05.002
Material:*	Aluminium/Steel Max working pressure for aluminum body: 210 bar Max working pressure for steel body: 350 bar

**Note:* To correctly select the material, in relation to application, see page S.003.

Ordering code

L16S-3C00-0 -

Seals
- None (std. NBR+Polyurethane)
- **Y**- Polyurethane
- For other options contact Sales dept.

Spring
- **A**- 0,7 bar (10 psi)
- **C**- 2,5 bar (36 psi)
- **E**- 5,5 bar (80 psi)
- **G**- 7 bar (101 psi)
- **L**- 11 bar (159 psi)
- **N**- 16 bar (232 psi)

Material std. housing
- **A**- Aluminium
- **S**- Steel

Housing size ports
- None (std. only cartridge)
- **5B**- 3/4" BSP
- **6B**- 1" BSP

L16P-3C00-3

Logic element 3 way piloted, poppet type

Description

Logic element cartridge valve poppet type, Bi-Directional Normally Closed.

Operation mode

The logic element will block port 1 to 2 or 2 to 1 until pressure at port 1 or 2 exceeds pressure at port 3 plus spring.
No pressure on port 3 will allow flow from port 1 to 2 or 2 to 1 when pressure is higher than spring force. Te ratio of areas between ports 1 and 2 is 1:1 and the ratio of areas between ports 1 or 2 and 3 is 1:2.

GENERAL DATA

Weight: 0,32 Kg (0,7 lbs).
Ambient temperature: -30 °C a 60 °C with seals standard (NBR).
Max proof pressure: 420 bar (6.090 psi).
Flow Max: 40 l/min (10,8 gpm).
Cartridge materials: high strength steel, internal parts hardened and grinding.

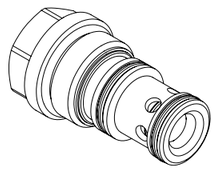

Drawing

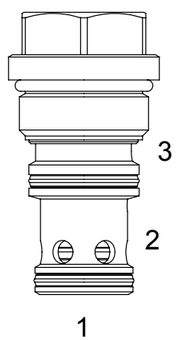

Hydraulic symbol

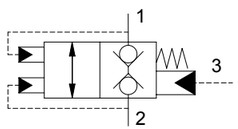

TECHNICAL DATA

HYDRAULIC	
Max. working pressure:	350 bar (5.075 psi)
Flow rate:	200 l/min (52 gpm)
Fluid: *Viscosity:*	Mineral based oil From 15cSt to 250 cSt
Leakage:	0,25 cc/min (5 drops/min) P max. 350 bar (5.075 psi)
Standard seals:	O-ring NBR Sales Polyurethane
Cavity:	SCS1630
Installation torque:	65 Nm
Max contamination level:	NAS 8 ISO 4406 19/17/14
Fluid temperature range:	From -20 °C to +80 °C
Seal kit std.:	5AG0055

Pressure drop

Oil viscosity: 46 cSt (217 SSU) Fluid temperature: 40 °C

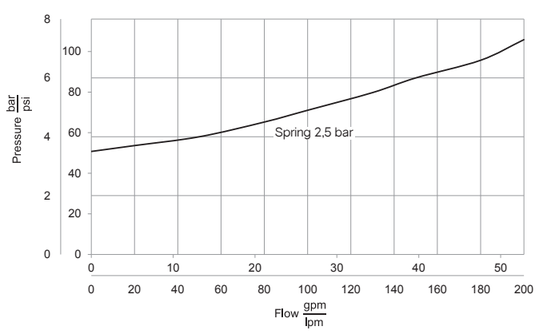

L16P-3C00-3

Inches
Millimeters

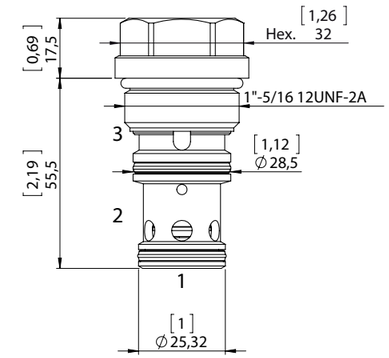

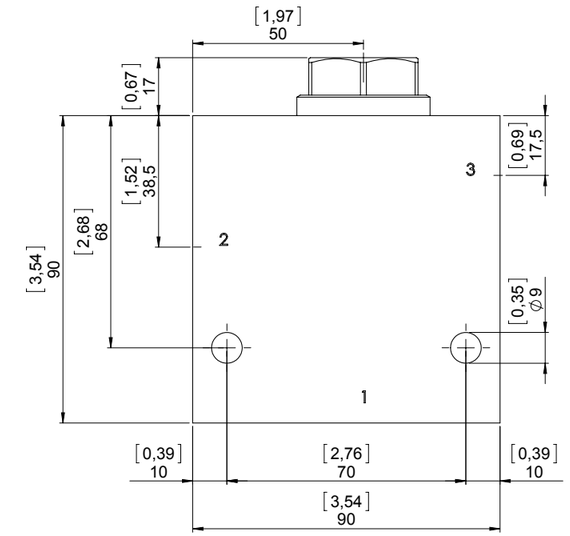

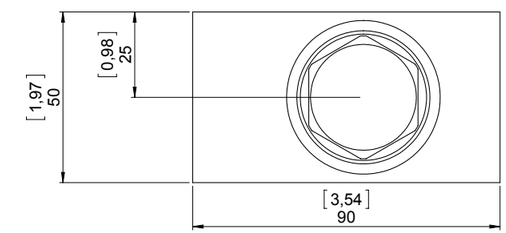

STANDARD HOUSING

Ordering code:	See page 9.05.002
Material:*	Aluminium/Steel Max working pressure for aluminum body: 210 bar Max working pressure for steel body: 350 bar

**Note:* To correctly select the material, in relation to application, see page S.003.

Ordering code

L16P-3C00-3 -

Seals
- None (std. NBR+Polyurethane)
- **Y**- Polyurethane
- For other options contact Sales dept.

Spring
- **A**- 0,7 bar (10 psi)
- **C**- 2,5 bar (36 psi)
- **E**- 5,5 bar (80 psi)
- **G**- 7 bar (101 psi)
- **L**- 11 bar (159 psi)
- **N**- 16 bar (232 psi)

Material std. housing
- **A**- Aluminium
- **S**- Steel

Housing size ports
- None (std. only cartridge)
- **5B**- 3/4" BSP
- **6B**- 1" BSP

L10S-3400-6

Logic element 3 way 3 position
low side oil, hydrostatic washing valve

Description

Logic element, spool-type, spring centered closed in neutral, 3-position, 3-way, can be used on hydrostatic transmissions to direct charge pump oil to the heat exchanger or to tank.

Operation mode

Logic element spring based poppet valve normally closed which will block flow 1 to 2 or 2 to 1 until pressure at 1 or 2 exceeds the pressure at 3 plus spring. When the element is in closed state, the ratio of areas 1 and 2 is 1:1, and the ratio of areas 1 or 2 to 3 is 1:2.

GENERAL DATA

Weight: 0,32 Kg (0,7 lbs).
Ambient temperature: -30 °C a 60 °C with seals standard (NBR).
Max proof pressure: 420 bar (6.090 psi).
Flow Max: 30 l/min (7,9 gpm).
Cartridge materials: high strength steel, internal parts hardened and grinding.

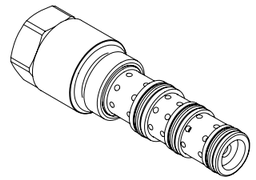

Drawing

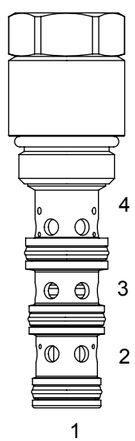

Hydraulic symbol

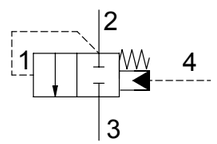

TECHNICAL DATA

HYDRAULIC

Max. working pressure:	350 bar (5.075 psi)
Flow rate:	40 l/min (10,6 gpm)
Fluid: *Viscosity:*	Mineral based oil From 15cSt to 250 cSt
Leakage:	200 cc/min P max. 350 bar (5.075 psi)
Standard seals:	O-ring NBR Seals Polyurethane
Cavity:	SCN1040
Installation torque:	33 Nm
Max contamination level:	NAS 8 ISO 4406 19/17/14
Fluid temperature range:	From -30 °C to +60 °C
Seal kit std.:	5AG0044

Pressure drop

Oil viscosity: 46 cSt (217 SSU) Fluid temperature: 40 °C

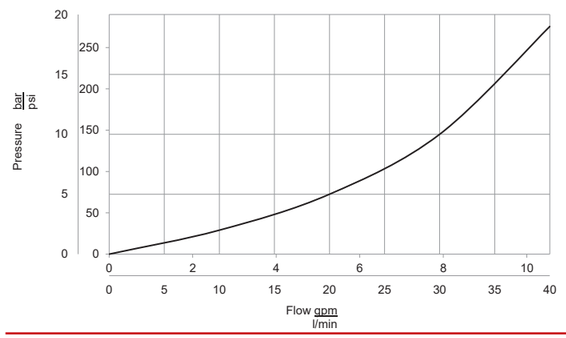

L10S-3400-6

Inches
Millimeters

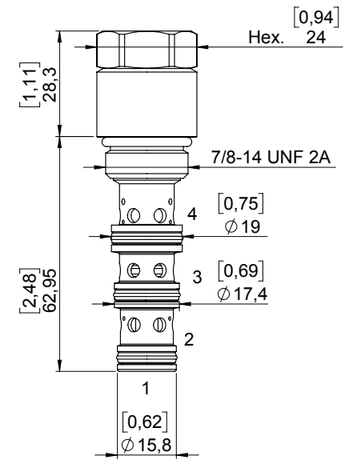

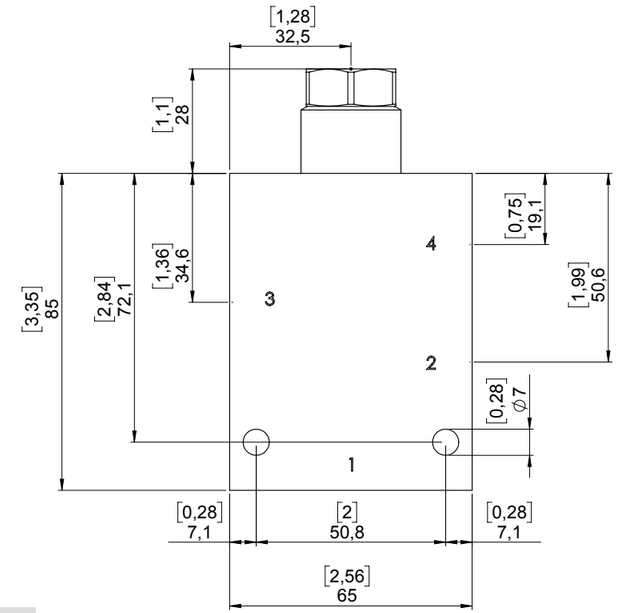

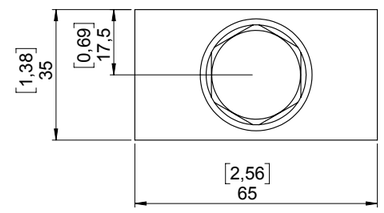

STANDARD HOUSING

Ordering code:	See page 9.05.002
Material:*	Aluminium/Steel Max working pressure for aluminum body: 210 bar Max working pressure for steel body: 350 bar

**Note:* To correctly select the material, in relation to application, see page S.003.

Ordering code

L10S-3400-6 -

Seals
- None (std. NBR+Polyurethane)
- **Y**- Polyurethane
- For other options contact Sales dept.

Spring
- **E**- 5,5 bar (80 psi)
- **L**- 11 bar (159 psi)

Material std. housing
- **A**- Aluminium
- **S**- Steel

Housing size ports
- **3B**- 3/8" BSP
- **4B**- 1/2" BSP
- **3S**- SAE 8
- **4S**- SAE 10

L10S-3400-7

Logic element 3 ways 3 positions
low side oil, Hydrostatic washing valve

Description

Logic element, spool-type, closed in neutral, 3-positions, 3-ways, can be used on hydrostatic transmissions to direct charge pump oil to the heat exchanger or to tank.

Operation mode

Logic element spool valve normally closed in central position which will block flow 3 to 2 or 4 until pressure at port 2 or 4 exceeds the pressure at the opposite port side plus spring, allowing flow from the low pressure side for cooling or filtration purpose.

GENERAL DATA

Weight: 0,32 Kg (0,7 lbs).
Ambient temperature: -30 °C a 60 °C with seals standard (NBR).
Max proof pressure: 420 bar (6.090 psi).
Flow Max: 200 l/min (52,8 gpm).
Cartridge materials: high strength steel, internal parts hardened and grinding.

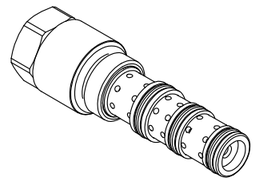

Drawing

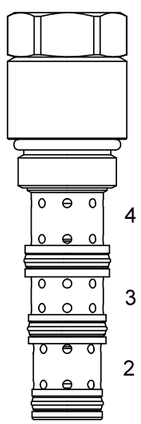

Hydraulic symbol

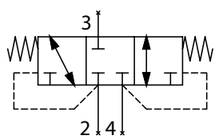

Pressure drop

Oil viscosity: 46 cSt (217 SSU) Fluid temperature: 40 °C

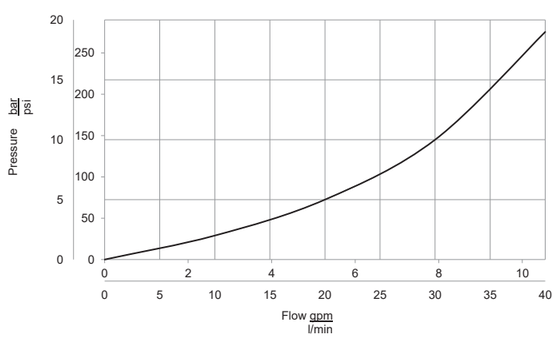

TECHNICAL DATA

HYDRAULIC

Max. working pressure:	350 bar (5.075 psi)
Flow rate:	40 l/min (7,9 gpm)
Fluid: *Viscosity:*	Mineral based oil From 15cSt to 250 cSt
Standard seals:	O-ring NBR Seals Polyurethane
Cavity:	SCN1040
Installation torque:	33 Nm
Max contamination level:	NAS 8 ISO 4406 19/17/14
Fluid temperature range:	From -20 °C to +80 °C
Seal kit std.:	5AG0054

L10S-3400-7

Inches
Millimeters

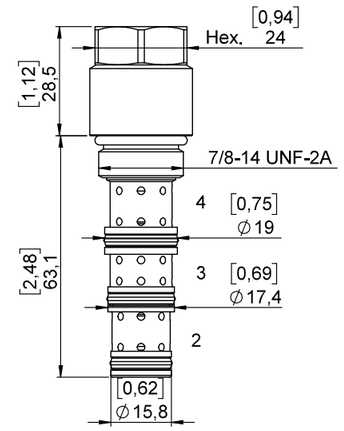

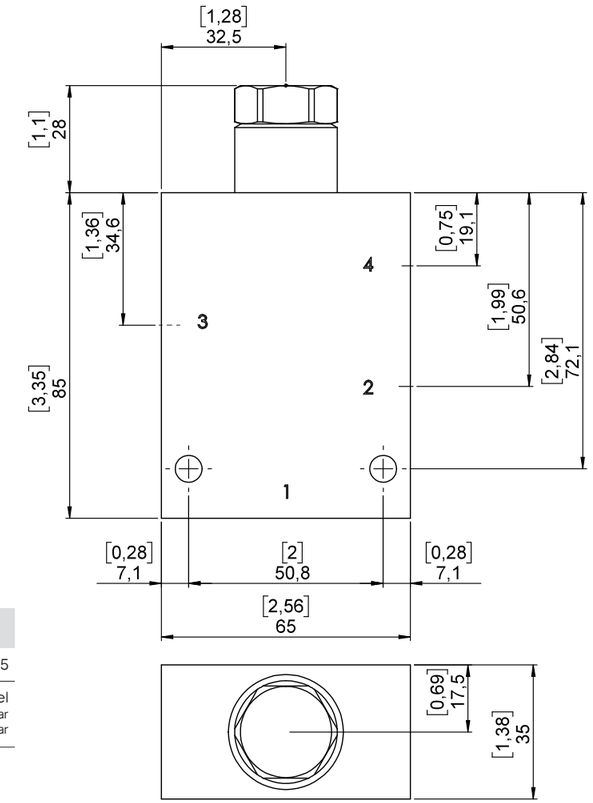

STANDARD HOUSING

Ordering code:	See page 9.03.005
Material:*	Aluminium/Steel Max working pressure for aluminum body: 210 bar Max working pressure for steel body: 350 bar

**Note:* To correctly select the material, in relation to application, see page S.003.

Ordering code

L10S-3400-7 -

Seals
- None (std. NBR+Polyurethane)
- **Y**- Polyurethane
- For other options contact Sales dept.

Spring
- **E**- 5,5 bar (80 psi)
- **L**- 11 bar (159 psi)

Material std. housing
- **A**- Aluminium
- **S**- Steel

Housing size ports
- **3B**- 3/8" BSP
- **4B**- 1/2" BSP
- **3S**- SAE 8
- **4S**- SAE 10

L10S-4401-3

Logic element 4 way piloted, spool type

Description

Logic element cartridge valve, spool type, pilot operated, hydraulic directional element.

Operation mode

The valve in neutral position allows flow from 3 to 2 while port 4 is closed, with pilot pressure on port 1 the valve shifts to open 3 to 4 while port 2 is closed.
Spring chamber is connected to 4 and any pressure affect the pilot pressure at 1:1 ratio.

GENERAL DATA

Weight: 0,15 Kg (0,7 lbs).
Ambient temperature: -30 °C a 60 °C with seals standard (NBR).
Max proof pressure: 300 bar (4.350 psi).
Flow Max: 40 l/min (10,5 gpm).
Cartridge materials: high strength steel, internal parts hardened and grinding.

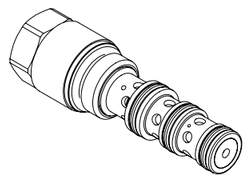

Drawing

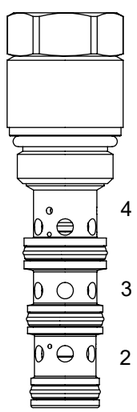

Hydraulic symbol

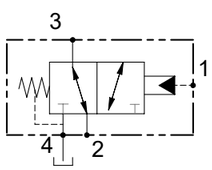

TECHNICAL DATA

HYDRAULIC	
Max. working pressure:	250 bar (3.625 psi)
Flow rate:	40 l/min (10,5 gpm)
Fluid: *Viscosity:*	Mineral based oil From 15cSt to 250 cSt
Leakage:	350 cc/min at 250 bar
Standard seals:	O-ring NBR Seals Polyurethane
Cavity:	SCN1040
Installation torque:	33 Nm
Max contamination level:	NAS 8 ISO 4406 19/17/14
Fluid temperature range:	From -20 °C to +80 °C
Seal kit std.:	5AG0044

Pressure drop

Oil viscosity: 46 cSt (217 SSU) Fluid temperature: 40 °C

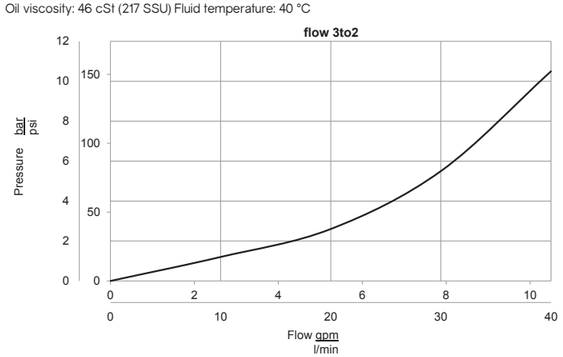

L10S-4401-3

Inches
Millimeters

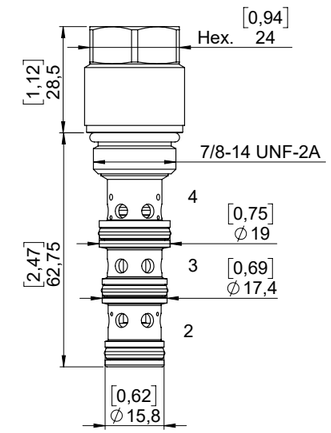

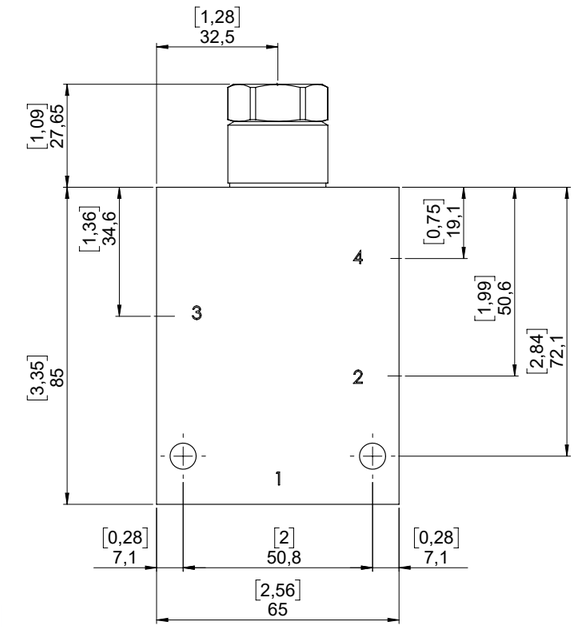

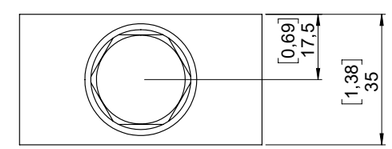

STANDARD HOUSING

Ordering code:	See page 9.03.005
Material:*	Aluminium/Steel Max working pressure for aluminum body: 210 bar Max working pressure for steel body: 350 bar

**Note:* To correctly select the material, in relation to application, see page S.003.

Ordering code

L10S-4401-3 -

Seals
- None (std. NBR+Polyurethane)
- **Y**- Polyurethane
- For other options contact Sales dept.

Spring
- **E**- 5,5 bar (80 psi)
- **L**- 11 bar (159 psi)

Material std. housing
- **A**- Aluminium
- **S**- Steel

Housing size ports
- **3B**- 3/8" BSP
- **4B**- 1/2" BSP
- **3S**- SAE 8
- **4S**- SAE 10

L10S-4401-8

Logic element 4 ways, priority on demand

Description

Logic element cartridge priority-on-demand valve, pressure-compensator with a static load sense, intended to provide priority flow in the required amount, while allowing excess flow to be used for auxiliary functions.

Operation mode

The logic element will deliver required priority flow at 4, with inlet flow at 3, regardless of load pressure. Excess flow on port 2. Port 1 is the load sense port.

GENERAL DATA

Weight: 0,15 Kg (0,7 lbs).
Ambient temperature: -30 °C a 60 °C with seals standard (NBR).
Max proof pressure: 300 bar (4.350 psi).
Flow Max: 50 l/min (13,2 gpm).
Cartridge materials: high strength steel, internal parts hardened and grinding.

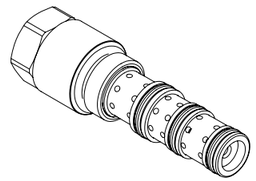

Drawing

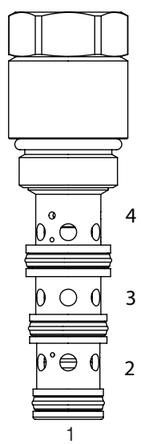

Hydraulic symbol

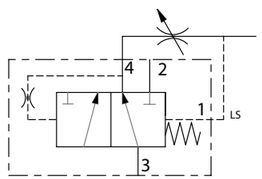

TECHNICAL DATA

HYDRAULIC

Max. working pressure:	250 bar (3.625 psi)
Flow rate:	50 l/min (13,2 gpm)
Fluid: *Viscosity:*	Mineral based oil From 15cSt to 250 cSt
Leakage:	350 cc/min
Standard seals:	O-ring NBR Seals Polyurethane
Cavity:	SCN1040
Installation torque:	33 Nm
Max contamination level:	NAS 8 ISO 4406 19/17/14
Fluid temperature range:	From -20 °C to +80 °C
Seal kit std.:	5AG0044

Pressure drop

Oil viscosity: 46 cSt (217 SSU) Fluid temperature: 40 °C

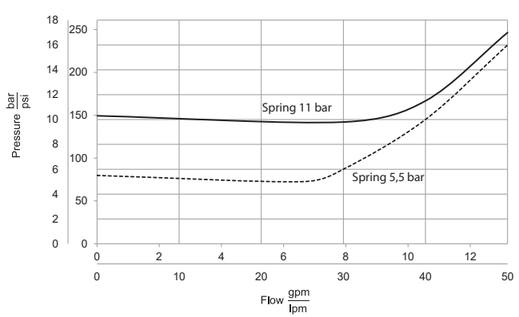

L10S-4401-8

Inches
Millimeters

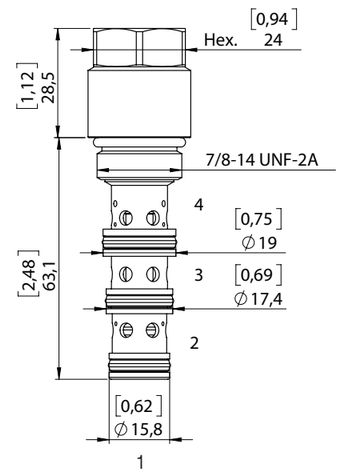

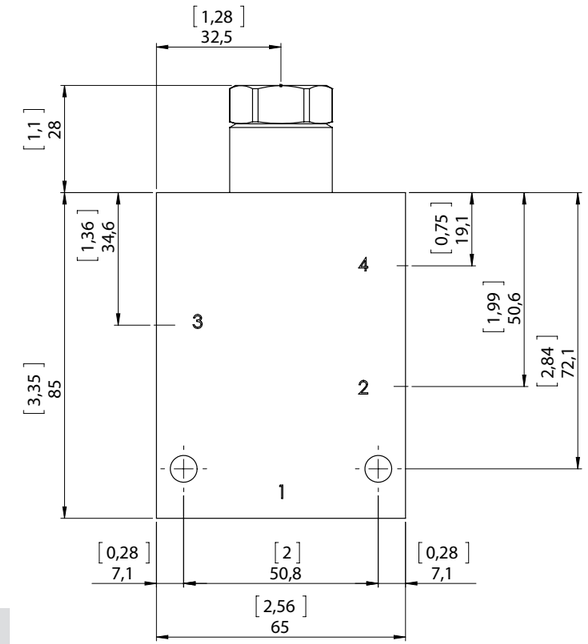

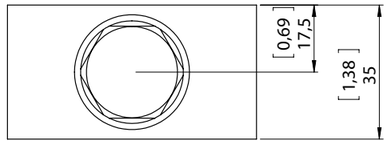

STANDARD HOUSING

Ordering code:	See page 9.03.005
Material:*	Aluminium/Steel Max working pressure for aluminum body: 210 bar Max working pressure for steel body: 350 bar

**Note:* To correctly select the material, in relation to application, see page S.003.

Ordering code

L10S-4401-8 -

Seals
- None (std. NBR+Polyurethane)
- **Y**- Polyurethane
- For other options contact Sales dept.

Spring
- **E**- 5,5 bar (80 psi)
- **L**- 11 bar (159 psi)

Material std. housing
- **A**- Aluminium
- **S**- Steel

Housing size ports
- **3B**- 3/8" BSP
- **4B**- 1/2" BSP
- **3S**- SAE 8
- **4S**- SAE 10

L10S-4401-9

Logic element 4 ways, dynamic priority on demand

Description

Logic element cartridge priority-on-demand valve, pressure-compensator with dynamic load sense, intended to provide priority flow in the required amount, while allowing excess flow to be used for auxiliary functions.

Operation mode

The logic element will deliver required priority flow at 4, with inlet flow at 3, regardless of load pressure. Excess flow on port 2. Port 1 is the load sense port.

GENERAL DATA

Weight: 0,15 Kg (0,7 lbs).
Ambient temperature: -30 °C a 60 °C with seals standard (NBR).
Max proof pressure: 300 bar (4.350 psi).
Flow Max: 50 l/min (13,2 gpm).
Cartridge materials: high strength steel, internal parts hardened and grinding.

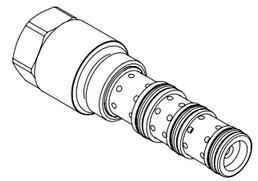

Drawing

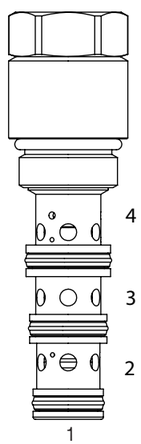

Hydraulic symbol

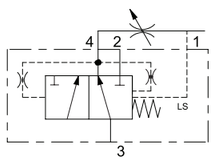

TECHNICAL DATA

HYDRAULIC

Max. working pressure:	250 bar (3.625 psi)
Flow rate:	50 l/min (13,2 gpm)
Fluid: *Viscosity:*	Mineral based oil From 15cSt to 250 cSt
Leakage:	350 cc/min
Standard seals:	O-ring NBR Seals Polyurethane
Cavity:	SCN1040
Installation torque:	33 Nm
Max contamination level:	NAS 8 ISO 4406 19/17/14
Fluid temperature range:	From -20 °C to +80 °C
Seal kit std.:	5AG0044

Pressure drop

Oil viscosity: 46 cSt (217 SSU) Fluid temperature: 40 °C

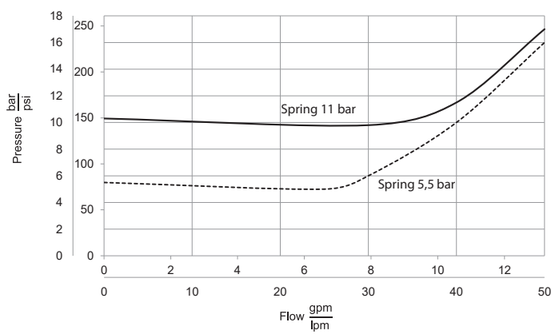

L10S-4401-9

Inches
Millimeters

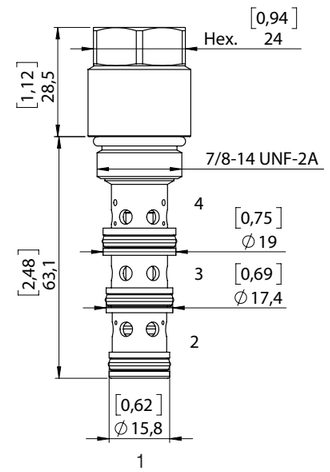

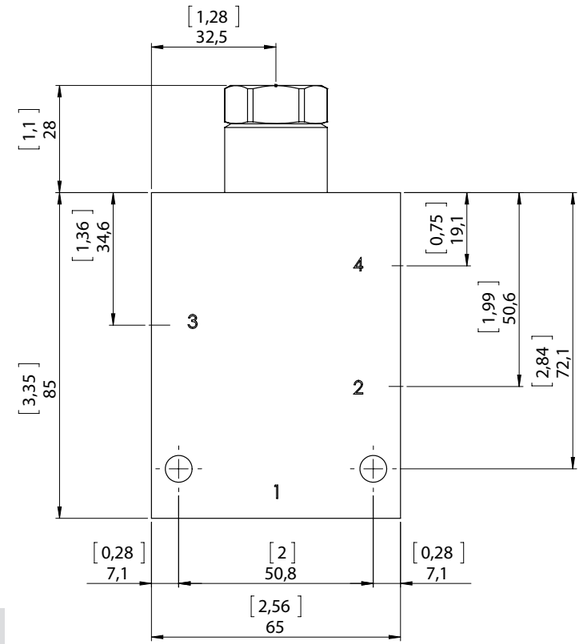

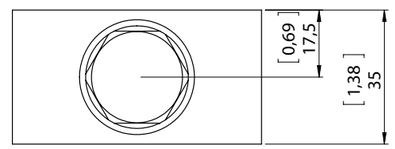

STANDARD HOUSING

Ordering code:	See page 9.03.005
Material:*	Aluminium/Steel Max working pressure for aluminum body: 210 bar Max working pressure for steel body: 350 bar

**Note:* To correctly select the material, in relation to application, see page S.003.

Ordering code

L10S-4401-9 -

Seals
- None (std. NBR+Polyurethane)
- **Y**- Polyurethane
- For other options contact Sales dept.

Spring
- **E**- 5,5 bar (80 psi)
- **L**- 11 bar (159 psi)

Material std. housing
- **A**- Aluminium
- **S**- Steel

Housing size ports
- **3B**- 3/8" BSP
- **4B**- 1/2" BSP
- **3S**- SAE 8
- **4S**- SAE 10

Electric valves On-Off 1.

Electro-proportional valves 2.

Pressure control valves 3.

Flow control valves 4.

Directional control valves 5.

Load control valves 6.

Special solutions 7.

Coils Standard bodies Cavity 8. 9. 10.

Service (Emergency manual override, general conditions, technical specifications) S.

R01S-50

Insert check valve, poppet type

Description

Check valve, designed to hold the load or block flow in application where low leakage is requested.

Operation mode

The valve block flow from 1 to 2, while allows flow from opposite direction 2 to 1 generating e different pressure drop based on spring selection.

GENERAL DATA

Weight: 0,095 Kg (0,21 lbs).
Ambient temperature range: -30 °C a 60 °C with standard seals (NBR).
Max. proof pressure: 420 bar (6.090 psi).
Flow Max: 10 l/min (2,7 gpm).
Cartridge materials: high strength steel, internal parts hardened and grinding.

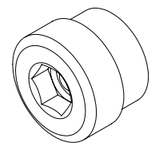

TECHNICAL DATA

HYDRAULIC

Max. working pressure:	350 bar (5.075 psi)
Flow rate:	10 l/min (2,7 gpm)
Fluid: *Viscosity:*	Mineral based oil From 15cSt to 250 cSt
Leakage:	0,25 cc/min (5 drops/min) P max, 350 bar (5.075 psi)
Standard seals:	O-ring NBR
Cavity:	GCW0120
Installation torque:	10 Nm
Max contamination level:	NAS 8 ISO 4406 19/17/14
Fluid temperature range:	From -20 °C to +80 °C

Drawing

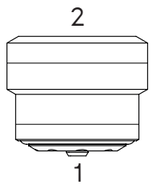

Hydraulic symbol

Pressure drop

Oil viscosity: 46 cSt (217 SSU) Fluid temperature: 40 °C

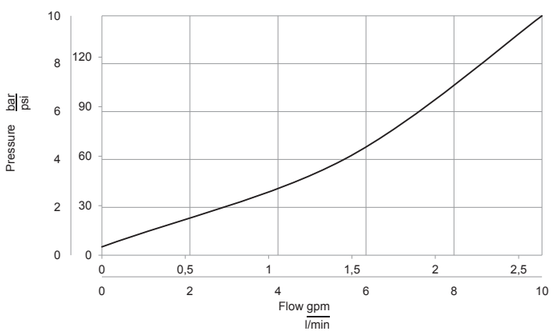

R01S-50

Inches
Millimeters

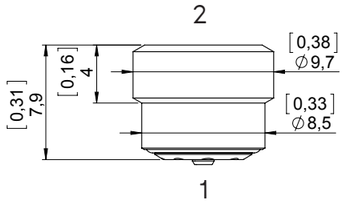

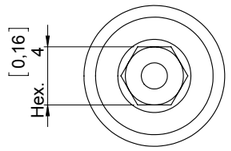

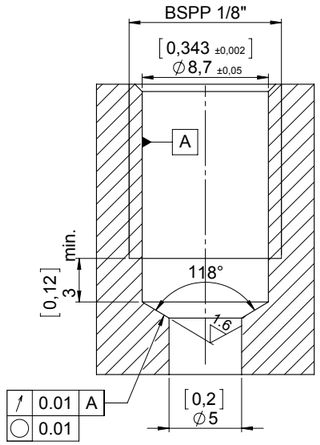

GCW0120

Ordering code

R01S-50 -

Spring
1- 0,35 bar (5 psi)

R01S-51

Insert check valve, poppet type

Description

Check valve, designed to hold the load or block flow in application where low leakage is requested.

Operation mode

The valve block flow from 2 to 1, while allows flow from opposite direction 1 to 2 generating e different pressure drop based on spring selection.

GENERAL DATA

Weight: 0,095 Kg (0,21 lbs).
Ambient temperature range: -30 °C a 60 °C with standard seals (NBR).
Max. proof pressure: 420 bar (6.090 psi).
Flow Max: 10 l/min (2,7 gpm).
Cartridge materials: high strength steel, internal parts hardened and grinding.

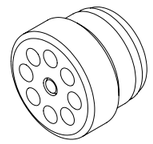

TECHNICAL DATA

HYDRAULIC

Max. working pressure:	350 bar (5.075 psi)
Flow rate:	10 l/min (2,7 gpm)
Fluid: *Viscosity:*	Mineral based oil From 15cSt to 250 cSt
Leakage:	0,25 cc/min (5 drops/min) P max, 350 bar (5.075 psi)
Standard seals:	O-ring NBR
Cavity:	GCW0120
Installation torque:	8 Nm
Max contamination level:	NAS 8 ISO 4406 19/17/14
Fluid temperature range:	From -20 °C to +80 °C

Drawing

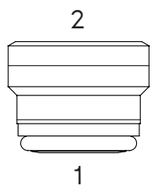

Hydraulic symbol

Pressure drop

Oil viscosity: 46 cSt (217 SSU) Fluid temperature: 40 °C

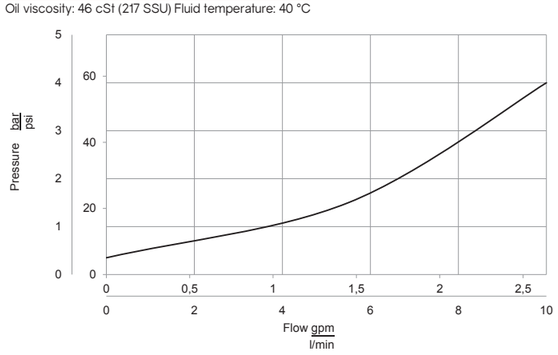

R01S-51

Inches
Millimeters

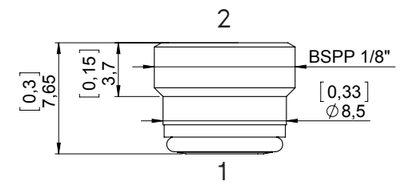

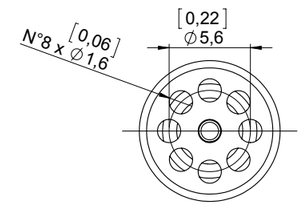

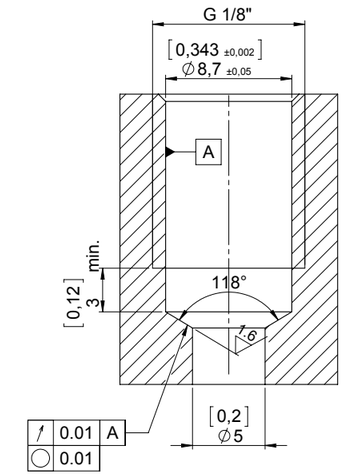

GCW0120

Ordering code

R01S-51 -

Spring
1- 0,35 bar (5 psi)

R06S-11

Check valve,
ball type

Description
Check valve, designed to hold the load or block flow in application where low
leakage is requested.
Operation mode
The valve block flow from 2 to 1, while allows flow from opposite direction 1 to 2
generating e different pressure drop based on spring selection.
GENERAL DATA
Weight: 0,39 Kg (0,85 lbs).
Ambient temperature range: -30 °C a 60 °C with standard seals (NBR).
Max. proof pressure: 420 bar (6.090 psi).
Flow Max: 20 l/min (5,4 gpm).
Cartridge materials: high strength steel, internal parts hardened and grinding.

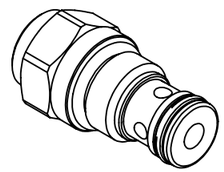

TECHNICAL DATA

HYDRAULIC	
Max. working pressure:	350 bar (5.075 psi)
Flow rate:	20 l/min (5,4 gpm)
Fluid: *Viscosity:*	Mineral based oil From 15cSt to 250 cSt
Leakage:	0,25 cc/min (5 drops/min) P max, 350 bar (5.075 psi)
Standard seals:	O-ring NBR Seals Polyurethane
Cavity:	SCN0620
Installation torque:	20 Nm
Max contamination level:	NAS 8 ISO 4406 19/17/14
Fluid temperature range:	From -20 °C to +80 °C
Seal kit std:	5AG0035

Drawing

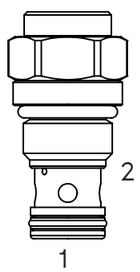

Hydraulic symbol

Pressure drop

Oil viscosity: 46 cSt (217 SSU) Fluid temperature: 40 °C

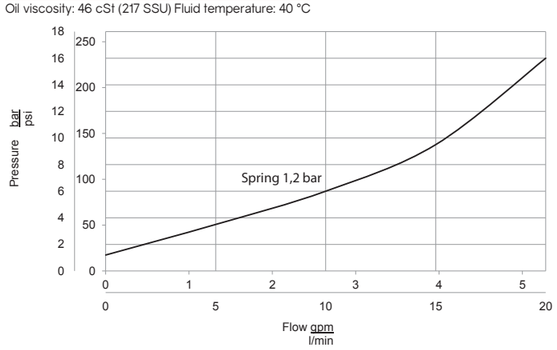

R06S-11

Inches
Millimeters

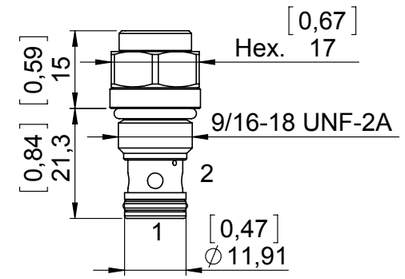

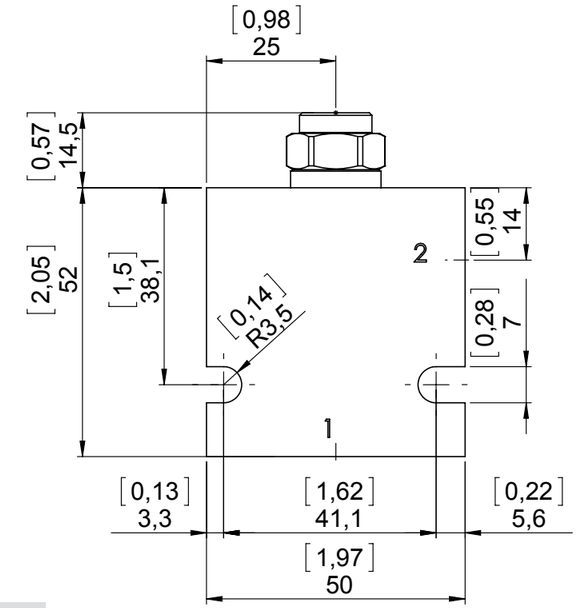

STANDARD HOUSING

Ordering code:	See page 9.01.001
Material:*	Aluminium/Steel Max working pressure for aluminum body: 210 bar Max working pressure for steel body: 350 bar

Note: To correctly select the material, in relation to application, see page S.003.

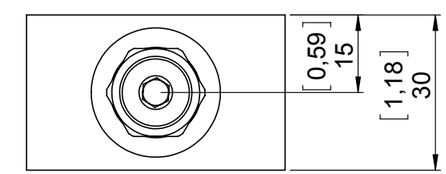

Ordering code

R06S-11 -

Seals
- None (std. NBR+Polyurethane)
- **Y**- Polyurethane
- For other options contact Sales dept.

Spring
- **1**- 0,35 bar (5 psi)
- **A**- 1,1 bar (16 psi)
- **2**- 2 bar (29 psi)

Material std. housing
- **A**- Aluminium
- **S**- Steel

Housing size ports
- **2B**- 1/4" BSP
- **2S**- SAE 6

R08S-20

Check valve, poppet type

Description

Check valve, designed to hold the load or block flow in application where low leakage is requested.

Operation mode

The valve block flow from 1 to 2, while allows flow from opposite direction 2 to 1 generating e different pressure drop based on spring selection.

GENERAL DATA

Weight: 0,095 Kg (0,21 lbs).
Ambient temperature range: -30 °C a 60 °C with standard seals (NBR).
Max proof pressure: 420 bar (6.090 psi).
Flow Max: 40 l/min (10,7 gpm).
Cartridge materials: high strength steel, internal parts hardened and grinding.

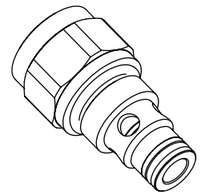

TECHNICAL DATA

HYDRAULIC	
Max. working pressure:	350 bar (5.075 psi)
Flow rate:	40 l/min (10,7 gpm)
Fluid: *Viscosity:*	Mineral based oil From 15cSt to 250 cSt
Leakage:	0,25 cc/min (5 drops/min) P max. 350 bar (5.075 psi)
Standard seals:	O-ring NBR Backup ring PTFE
Cavity:	SCN0820
Installation torque:	30 Nm
Max contamination level:	NAS 8 ISO 4406 19/17/14
Fluid temperature range:	From -20 °C to +80 °C
Fatigue cycle life:	1.000.000 cycle at 350 bar
Seals kit std.:	5AG0012

Drawing

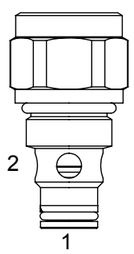

Hydraulic symbol

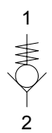

Pressure drop

Oil viscosity: 46 cSt (217 SSU) Fluid temperature: 40 °C

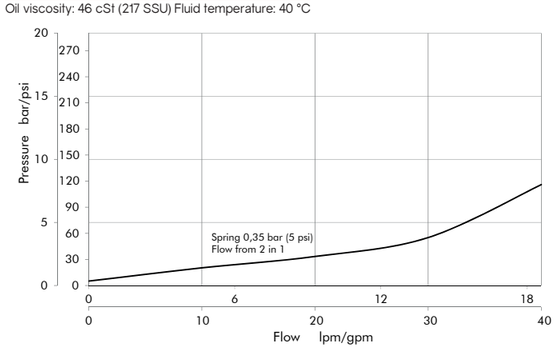

R08S-20

Inches
Millimeters

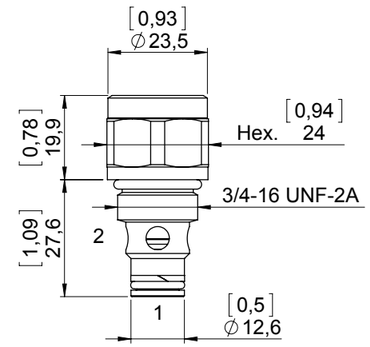

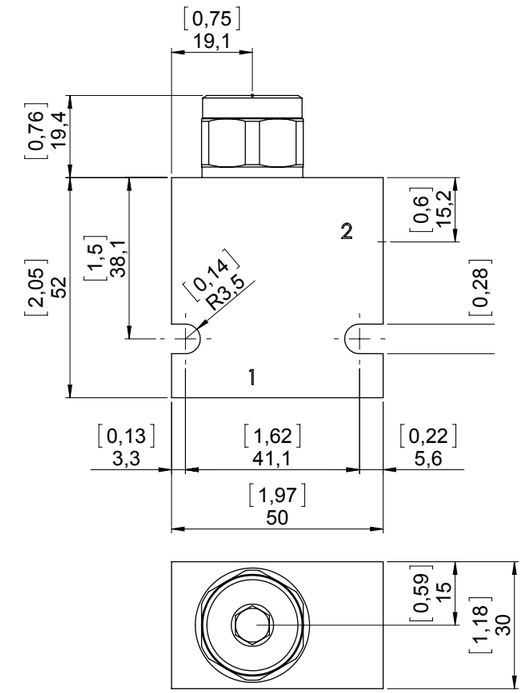

STANDARD HOUSING

Ordering code:	See page 9.02.001
Material:*	Aluminium/Steel Max working pressure for aluminum body: 210 bar Max working pressure for steel body: 350 bar

**Note:* To correctly select the material, in relation to application, see page S.003.

Ordering code

R08S-20 -

Seals
- None (std. NBR+Polyurethane)
- **Y**- Polyurethane
- For other options contact Sales dept.

Spring
- **1**- 0,35 bar (5 psi)
- **2**- 2 bar (29 psi)
- **3**- 4 bar (58 psi)
- **5**- 6,5 bar (94 psi)
- **7**- 9,2 bar (133 psi)

Material std. housing
- **A**- Aluminium
- **S**- Steel

Housing size ports
- None (std. only cartridge)
- **2B**- 1/4" BSP
- **3B**- 3/8" BSP
- **2S**- SAE 6
- **3S**- SAE 8

R08S-21

Check valve, poppet type

Description

Check valve, designed to hold the load or block flow in application where low leakage is requested.

Operation mode

The valve block flow from 2 to 1, while allows flow from opposite direction 1 to 2 generating a different pressure drop based on spring selection.

GENERAL DATA

Weight: 0,095 Kg (0,21 lbs).
Ambient temperature range: -30 °C a 60 °C with standard seals (NBR).
Max proof pressure: 420 bar (6.090 psi).
Flow Max: 40 l/min (10,7 gpm).
Cartridge materials: high strength steel, internal parts hardened and grinding.

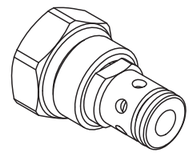

TECHNICAL DATA

HYDRAULIC	
Max. working pressure:	350 bar (5.075 psi)
Flow rate:	40 l/min (10,7 gpm)
Fluid: *Viscosity:*	Mineral based oil From 15cSt to 250 cSt
Leakage:	0,25 cc/min (5 drops/min) P max. 350 bar (5.075 psi)
Standard seals:	O-ring NBR + Polyurethane
Cavity:	SCN0820
Installation torque:	45 Nm
Max contamination level:	NAS 8 ISO 4406 19/17/14
Fluid temperature range:	From -20 °C to +80 °C
Fatigue cycle life:	1.000.000 cycle at 350 bar
Seals kit std.:	5AG0022

Drawing

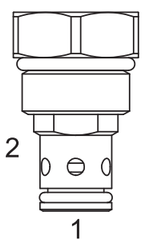

Hydraulic symbol

Pressure drop

Oil viscosity: 46 cSt (217 SSU) Fluid temperature: 40 °C

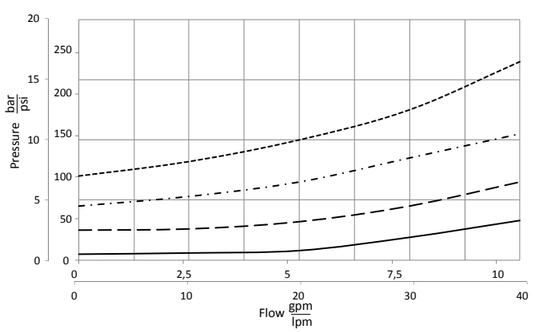

R08S-21

Inches
Millimeters

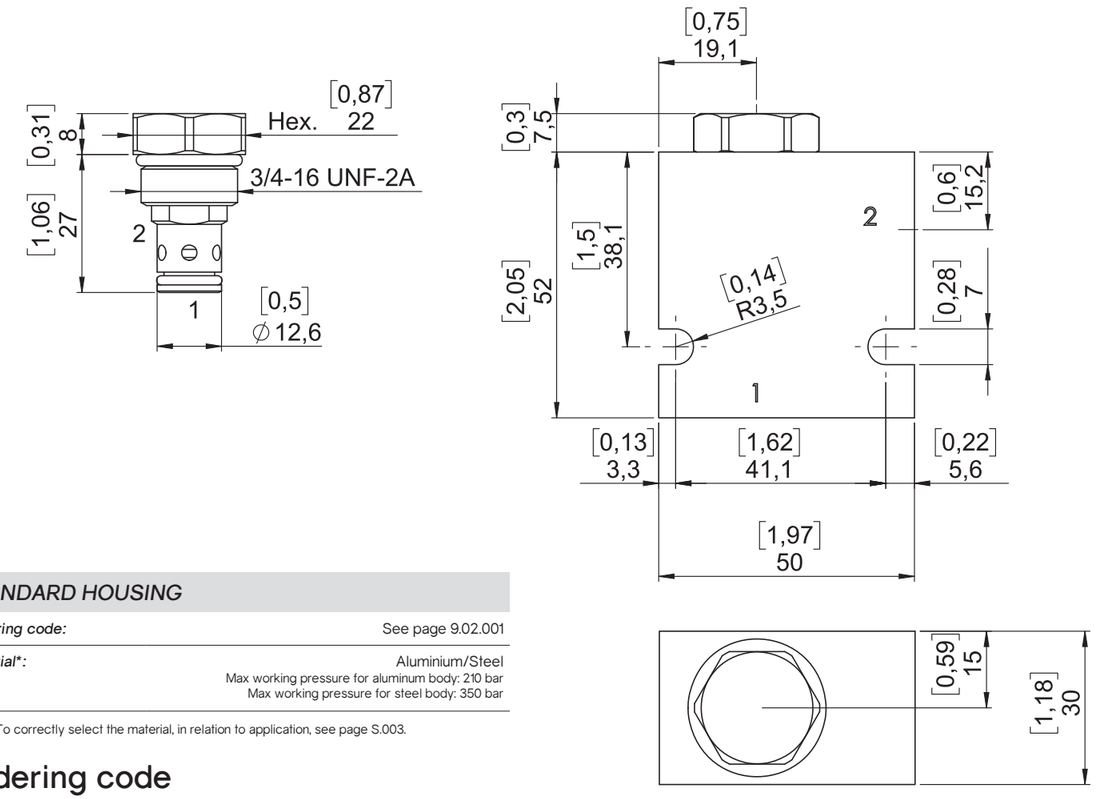

STANDARD HOUSING

Ordering code:	See page 9.02.001
Material:*	Aluminium/Steel Max working pressure for aluminum body: 210 bar Max working pressure for steel body: 350 bar

**Note:* To correctly select the material, in relation to application, see page S.003.

Ordering code

R08S-21 -

Seals
- None (std. NBR+Polyurethane)
- **Y**- Polyurethane
- For other options contact Sales dept.

Spring
- **1**- 0,45 bar (6,5 psi)
- **2**- 2,5 bar (36,2 psi)
- **3**- 5 bar (72,5 psi)
- **5**- 7 bar (101 psi)
- **7**- 10 bar (145 psi)

Material std. housing
- **A**- Aluminium
- **S**- Steel

Housing size ports
- None (std. only cartridge)
- **2B**- 1/4" BSP
- **3B**- 3/8" BSP
- **2S**- SAE 6
- **3S**- SAE 8

R10S-20

Check valve, poppet type

Description

Check valve, designed to hold the load or block flow in application where low leakage is requested.

Operation mode

The valve block flow from 1 to 2, while allows flow from opposite direction 2 to 1 generating e different pressure drop based on spring selection.

GENERAL DATA

Weight: 0,12 Kg (0,27 lbs).
Ambient temperature: -30 °C a 60 °C with seals standard (NBR).
Max proof pressure: 420 bar (6.090 psi).
Flow Max: 70 l/min (18,7 gpm).
Cartridge materials: high strength steel, internal parts hardened and grinding.

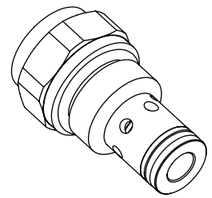

Drawing

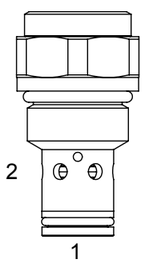

Hydraulic symbol

TECHNICAL DATA

HYDRAULIC

Max. working pressure:	350 bar (5.075 psi)
Flow rate:	70 l/min (18,7 gpm)
Fluid: *Viscosity:*	Mineral based oil From 15cSt to 250 cSt
Leakage:	0,25 cc/min (5 drops/min) P max. 350 bar (5.075 psi)
Standard seals:	O-ring NBR Backup ring PTFE
Cavity:	SCN1020
Installation torque:	40 Nm
Max contamination level:	NAS 8 ISO 4406 19/17/14
Fluid temperature range:	From -20 °C to +80 °C
Fatigue cycle life:	1.000.000 cycle at 350 bar
Seals kit std.:	5AG0020

Pressure drop

Oil viscosity: 46 cSt (217 SSU) Fluid temperature: 40 °C

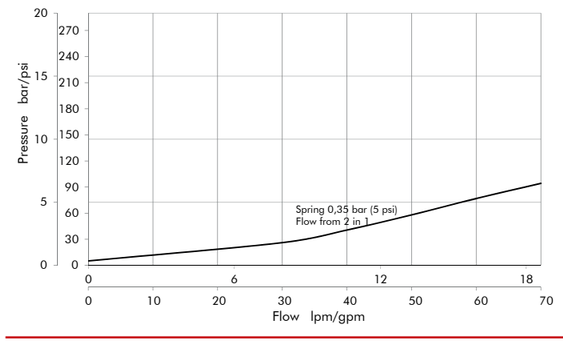

R10S-20

Inches
Millimeters

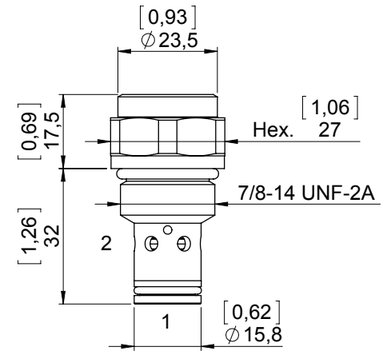

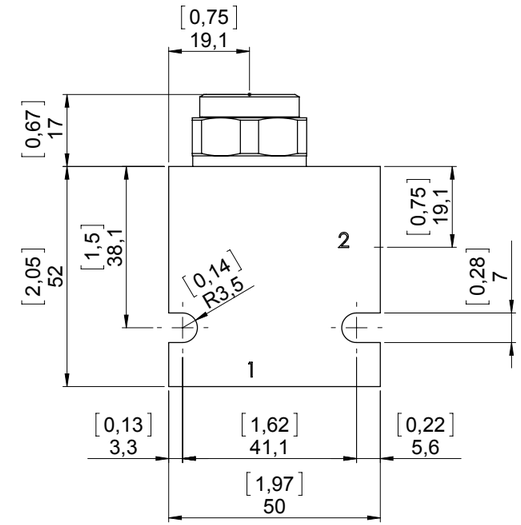

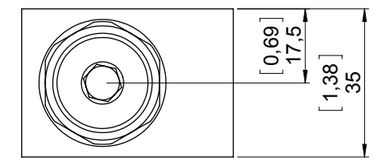

STANDARD HOUSING

Ordering code:	See page 9.03.001
Material:*	Aluminium/Steel Max working pressure for aluminum body: 210 bar Max working pressure for steel body: 350 bar

**Note:* To correctly select the material, in relation to application, see page S.003.

Ordering code

R10S-20 -

Seals
- None (std. NBR+Polyurethane)
- **Y**- Polyurethane
- For other options contact Sales dept.

Spring
- **1**- 0,35 bar (5 psi)
- **2**- 2 bar (29 psi)
- **3**- 4 bar (58 psi)
- **5**- 6,5 bar (94 psi)
- **7**- 9,2 bar (133 psi)

Material std. housing
- **A**- Aluminium
- **S**- Steel

Housing size ports
- None (std. only cartridge)
- **3B**- 3/8" BSP
- **4B**- 1/2" BSP
- **3S**- SAE 8
- **4S**- SAE 10

R10S-21

Check valve, poppet type

Description

Check valve, designed to hold the load or block flow in application where low leakage is requested.

Operation mode

The valve block flow from 2 to 1, while allows flow from opposite direction 1 to 2 generating e different pressure drop based on spring selection.

GENERAL DATA

Weight: 0,12 Kg (0,27 lbs).
Ambient temperature: -30 °C a 60 °C with seals standard (NBR).
Max proof pressure: 420 bar (6.090 psi).
Flow Max: 70 l/min (18,7 gpm).
Cartridge materials: high strength steel, internal parts hardened and grinding.

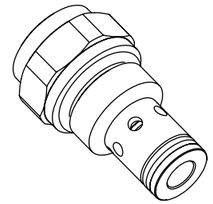

Drawing

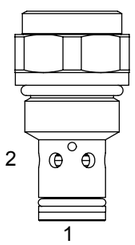

Hydraulic symbol

TECHNICAL DATA

HYDRAULIC	
Max. working pressure:	350 bar (5.075 psi)
Flow rate:	70 l/min (18,7 gpm)
Fluid: *Viscosity:*	Mineral based oil From 15cSt to 250 cSt
Leakage:	0,25 cc/min (5 drops/min) P max. 350 bar (5.075 psi)
Standard seals:	O-ring NBR Backup ring PTFE
Cavity:	SCN1020
Installation torque:	40 Nm
Max contamination level:	NAS 8 ISO 4406 19/17/14
Fluid temperature range:	From -20 °C to +80 °C
Fatigue cycle life:	1.000.000 cycle at 350 bar
Seals kit std.:	5AG0020

Pressure drop

Oil viscosity: 46 cSt (217 SSU) Fluid temperature: 40 °C

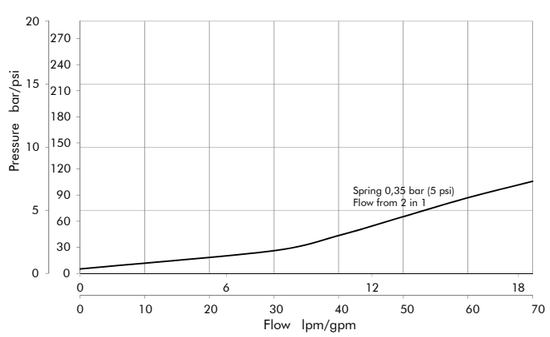

R10S-21

Inches
Millimeters

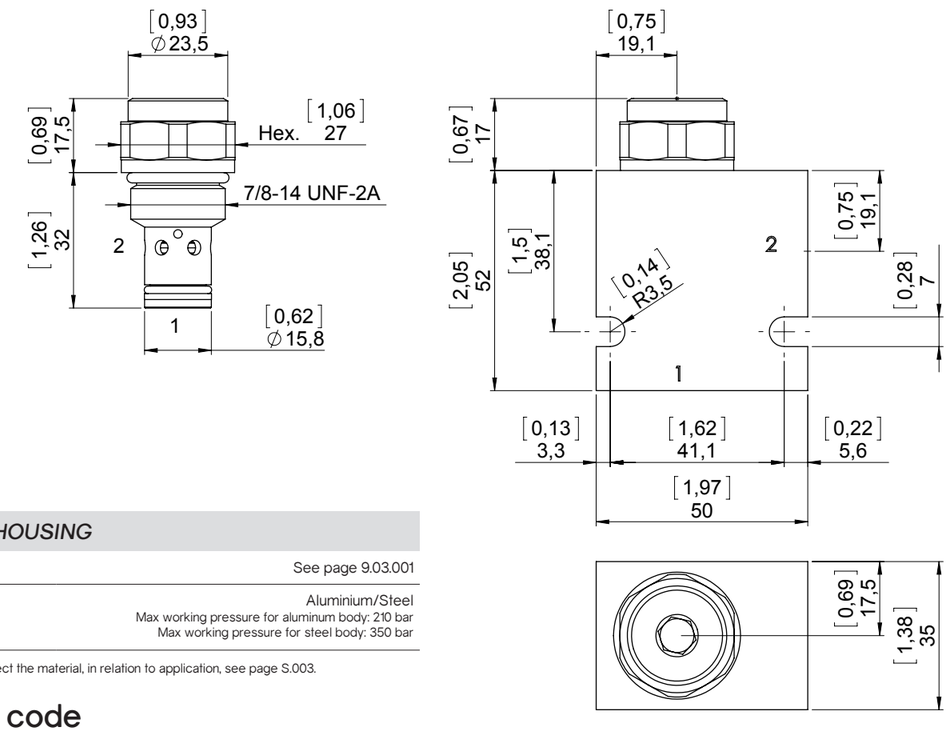

STANDARD HOUSING

Ordering code:	See page 9.03.001
Material:*	Aluminium/Steel Max working pressure for aluminum body: 210 bar Max working pressure for steel body: 350 bar

**Note:* To correctly select the material, in relation to application, see page S.003.

Ordering code

R10S-21 -

Seals
- None (std. NBR+Polyurethane)
- **Y**- Polyurethane
- For other options contact Sales dept.

Spring
- **1**- 0,35 bar (5 psi)
- **2**- 2 bar (29 psi)
- **3**- 4 bar (58 psi)
- **5**- 6,5 bar (94 psi)
- **7**- 9,2 bar (133 psi)

Material std. housing
- **A**- Aluminium
- **S**- Steel

Housing size ports
- None (std. only cartridge)
- **3B**- 3/8" BSP
- **4B**- 1/2" BSP
- **3S**- SAE 8
- **4S**- SAE 10

R12S-20

Check valve, poppet type

Description

Check valve, designed to hold the load or block flow in application where low leakage is requested.

Operation mode

The valve block flow from 1 to 2, while allows flow from opposite direction 2 to 1 generating e different pressure drop based on spring selection.

GENERAL DATA

Weight: 0,19 Kg (0,42 lbs).
Ambient temperature: -30 °C a 60 °C with seals standard (NBR).
Max proof pressure: 420 bar (6.090 psi).
Flow Max: 110 l/min (29 gpm).
Cartridge materials: high strength steel, internal parts hardened and grinding.

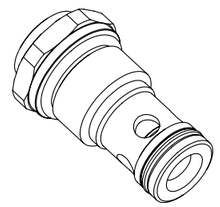

Drawing

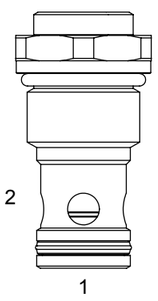

Hydraulic symbol

TECHNICAL DATA

HYDRAULIC	
Max. working pressure:	350 bar (5.075 psi)
Flow rate:	110 l/min (29 gpm)
Fluid: *Viscosity:*	Mineral based oil From 15cSt to 250 cSt
Leakage:	0,25 cc/min (5 drops/min) P max. 350 bar (5.075 psi)
Standard seals:	O-ring NBR Seals Polyurethane
Cavity:	SCN1220
Installation torque:	60 Nm
Max contamination level:	NAS 8 ISO 4406 19/17/14
Fluid temperature range:	From -20 °C to +80 °C
Fatigue cycle life:	1.000.000 cycle at 350 bar
Seals kit std.:	5AG0028

Pressure drop

Oil viscosity: 46 cSt (217 SSU) Fluid temperature: 40 °C

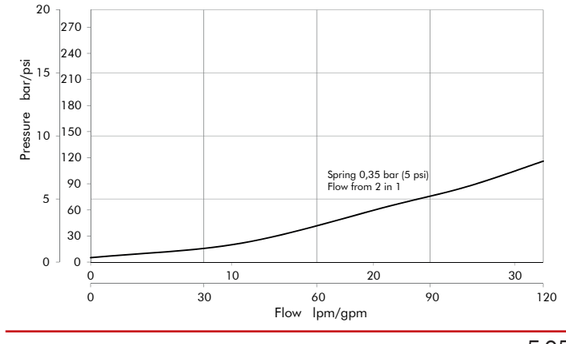

R12S-20

Inches
Millimeters

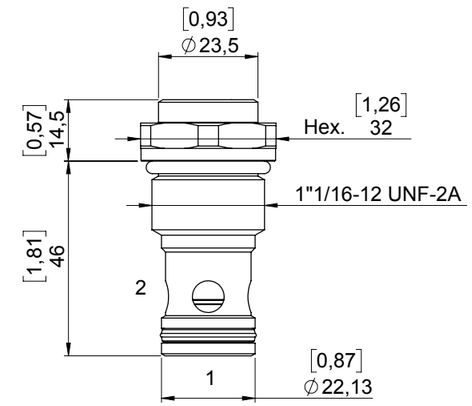

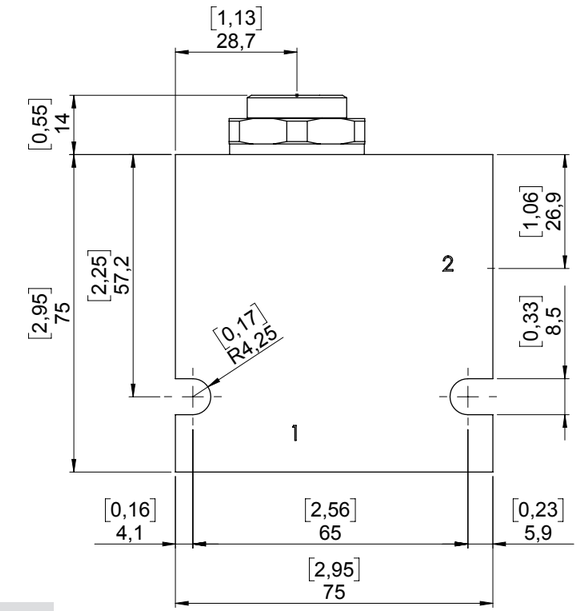

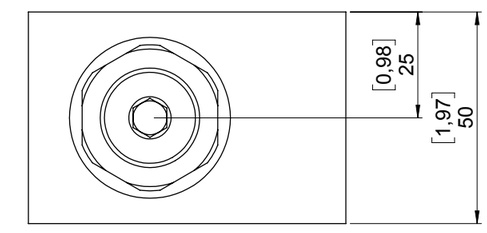

STANDARD HOUSING

Ordering code:	See page 9.04.001
Material:*	Aluminium/Steel Max working pressure for aluminum body: 210 bar Max working pressure for steel body: 350 bar

**Note:* To correctly select the material, in relation to application, see page S.003.

Ordering code

R12S-20 -

Seals
- None (std. NBR+Polyurethane)
- **Y**- Polyurethane
- For other options contact Sales dept.

Spring
- **1**- 0,35 bar (5 psi)
- **2**- 2 bar (29 psi)
- **3**- 4 bar (58 psi)

Material std. housing
- **A**- Aluminium
- **S**- Steel

Housing size ports
- None (std. only cartridge)
- **4B**- 1/2" BSP
- **5B**- 3/4" BSP
- **4S**- SAE 10
- **5S**- SAE 12

R12S-21

Check valve, poppet type

Description

Check valve, designed to hold the load or block flow in application where low leakage is requested.

Operation mode

The valve block flow from 2 to 1, while allows flow from opposite direction 1 to 2 generating e different pressure drop based on spring selection.

GENERAL DATA

Weight: 0,19 Kg (0,42 lbs).
Ambient temperature: -30 °C a 60 °C with seals standard (NBR).
Max proof pressure: 420 bar (6.090 psi).
Flow Max: 110 l/min (29 gpm).
Cartridge materials: high strength steel, internal parts hardened and grinding.

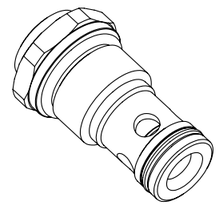

TECHNICAL DATA	
HYDRAULIC	
Max. working pressure:	350 bar (5.075 psi)
Flow rate:	110 l/min (29 gpm)
Fluid: *Viscosity:*	Mineral based oil From 15cSt to 250 cSt
Leakage:	0,25 cc/min (5 drops/min) P max. 350 bar (5.075 psi)
Standard seals:	O-ring NBR Seals Polyurethane
Cavity:	SCN1220
Installation torque:	60 Nm
Max contamination level:	NAS 8 ISO 4406 19/17/14
Fluid temperature range:	From -20 °C to +80 °C
Fatigue cycle life:	1.000.000 cycle at 350 bar
Seals kit std.:	5AG0028

Drawing

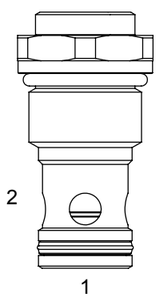

Hydraulic symbol

Pressure drop

Oil viscosity: 46 cSt (217 SSU) Fluid temperature: 40 °C

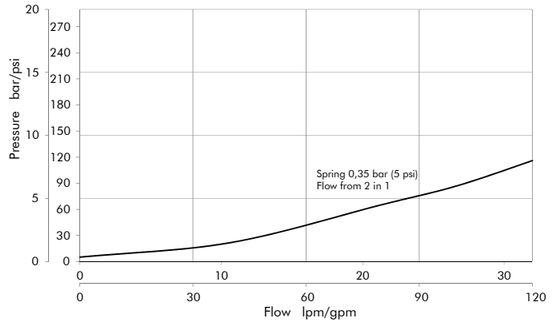

R12S-21

Inches
Millimeters

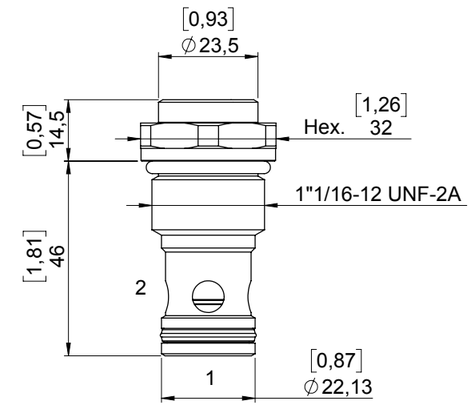

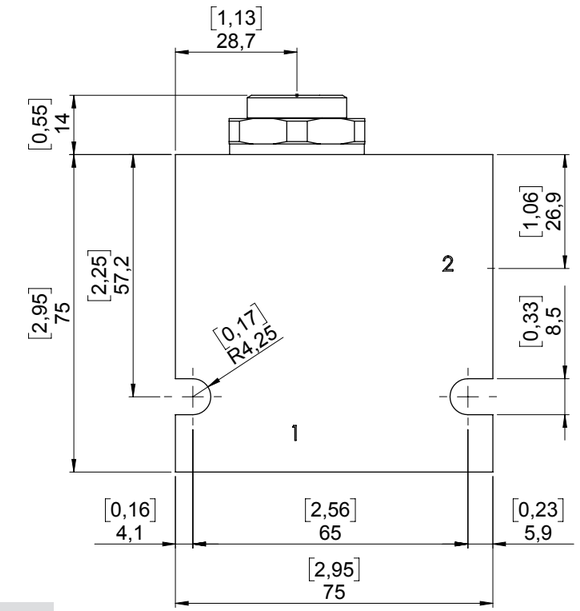

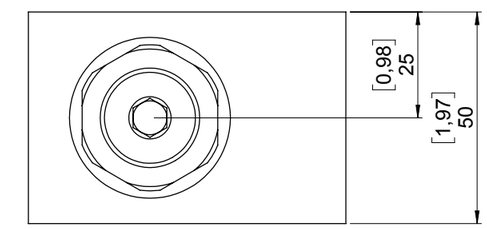

STANDARD HOUSING	
Ordering code:	See page 9.04.001
Material:*	Aluminium/Steel Max working pressure for aluminum body: 210 bar Max working pressure for steel body: 350 bar

**Note:* To correctly select the material, in relation to application, see page S.003.

Ordering code

R12S-21 -

Seals
- None (std. NBR+Polyurethane)
- **Y**- Polyurethane
- For other options contact Sales dept.

Spring
- **1**- 0,35 bar (5 psi)
- **2**- 2 bar (29 psi)
- **3**- 4 bar (58 psi)

Material std. housing
- **A**- Aluminium
- **S**- Steel

Housing size ports
- None (std. only cartridge)
- **4B**- 1/2" BSP
- **5B**- 3/4" BSP
- **4S**- SAE 10
- **5S**- SAE 12

R16S-20

Check valve, poppet type

Description

Check valve, designed to hold the load or block flow in application where low leakage is requested.

Operation mode

The valve block flow from 2 to 1, while allows flow from opposite direction 1 to 2 generating e different pressure drop based on spring selection.

GENERAL DATA

Weight: 0,30 Kg (0,66 lbs).
Ambient temperature: -30 °C a 60 °C with seals standard (NBR).
Max proof pressure: 420 bar (6.090 psi).
Flow Max: 160 l/min (42 gpm).
Cartridge materials: high strength steel, internal parts hardened and grinding.

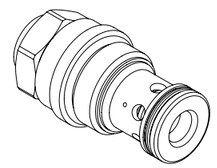

Drawing

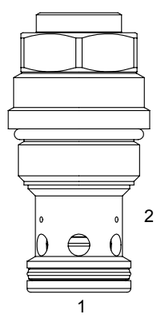

Hydraulic symbol

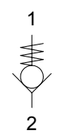

TECHNICAL DATA

HYDRAULIC	
Max. working pressure:	350 bar (5.075 psi)
Flow rate:	160 l/min (42 gpm)
Fluid: *Viscosity:*	Mineral based oil From 15cSt to 250 cSt
Leakage:	0,25 cc/min (5 drops/min) P max. 350 bar (5.075 psi)
Standard seals:	O-ring NBR Seals Polyurethane
Cavity:	SCN1620
Installation torque:	80 Nm
Max contamination level:	NAS 8 ISO 4406 19/17/14
Fluid temperature range:	From -20 °C to +80 °C
Fatigue cycle life:	1.000.000 cycle at 350 bar
Seals kit std.:	5AG0029

Pressure drop

Oil viscosity: 46 cSt (217 SSU) Fluid temperature: 40 °C

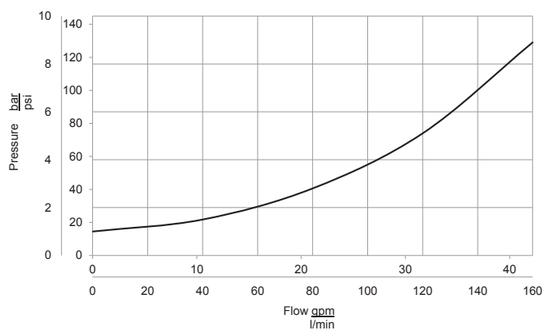

R16S-20

Inches
Millimeters

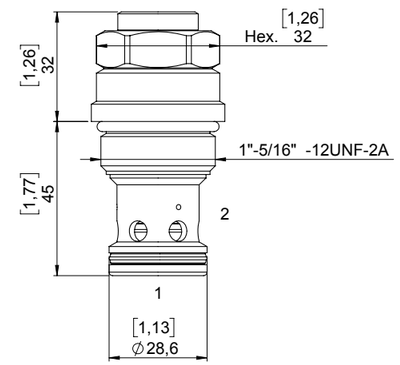

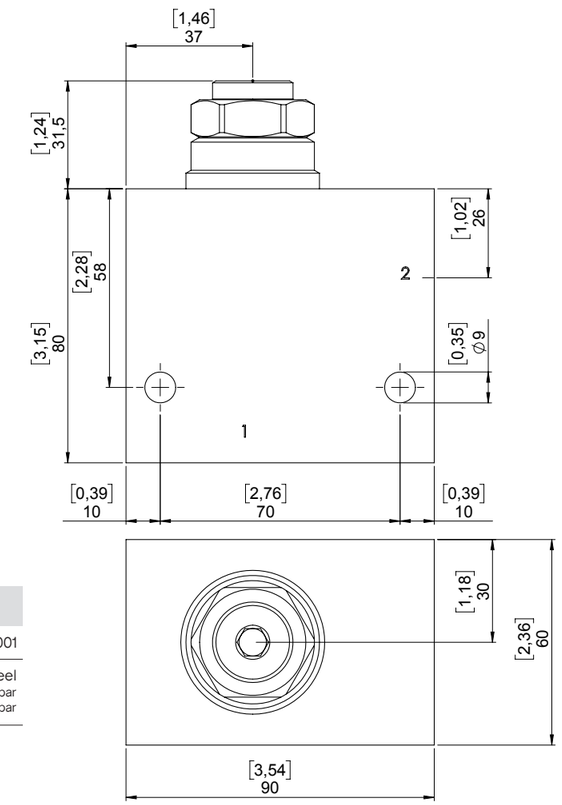

STANDARD HOUSING

Ordering code:	See page 9.05.001
Material:*	Aluminium/Steel Max working pressure for aluminum body: 210 bar Max working pressure for steel body: 350 bar

**Note:* To correctly select the material, in relation to application, see page S.003.

Ordering code

R16S-20 -

Seals
- None (std. NBR+Polyurethane)
- **Y**- Polyurethane
- For other options contact Sales dept.

Spring
- **A**- 1,1 bar (15,9 psi)
- **2**- 2 bar (29 psi)
- **3**- 4 bar (58 psi)

Material std. housing
- **A**- Aluminium
- **S**- Steel

Housing size ports
- None (std. only cartridge)
- **4B**- 1/2" BSP
- **5B**- 3/4" BSP
- **4S**- SAE 10
- **5S**- SAE 12

R16S-21

Check valve, poppet type

Description

Check valve, designed to hold the load or block flow in application where low leakage is requested.

Operation mode

The valve block flow from 2 to 1, while allows flow from opposite direction 1 to 2 generating e different pressure drop based on spring selection.

GENERAL DATA

Weight: 0,30 Kg (0,66 lbs).
Ambient temperature: -30 °C a 60 °C with seals standard (NBR).
Max proof pressure: 420 bar (6.090 psi).
Flow Max: 160 l/min (42 gpm).
Cartridge materials: high strength steel, internal parts hardened and grinding.

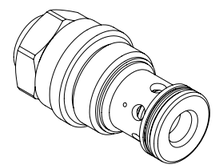

Drawing

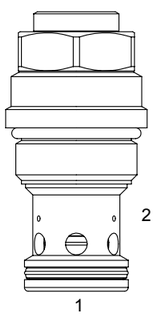

Hydraulic symbol

TECHNICAL DATA

HYDRAULIC	
Max. working pressure:	350 bar (5.075 psi)
Flow rate:	160 l/min (42 gpm)
Fluid: *Viscosity:*	Mineral based oil From 15cSt to 250 cSt
Leakage:	0,25 cc/min (5 drops/min) P max. 350 bar (5.075 psi)
Standard seals:	O-ring NBR Seals Polyurethane
Cavity:	SCN1620
Installation torque:	80 Nm
Max contamination level:	NAS 8 ISO 4406 19/17/14
Fluid temperature range:	From -20 °C to +80 °C
Fatigue cycle life:	1.000.000 cycle at 350 bar
Seals kit std.:	5AG0029

Pressure drop

Oil viscosity: 46 cSt (217 SSU) Fluid temperature: 40 °C

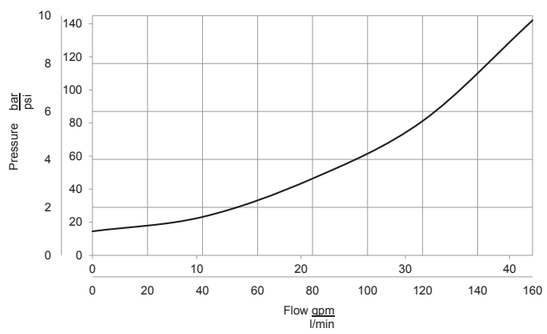

R16S-21

Inches
Millimeters

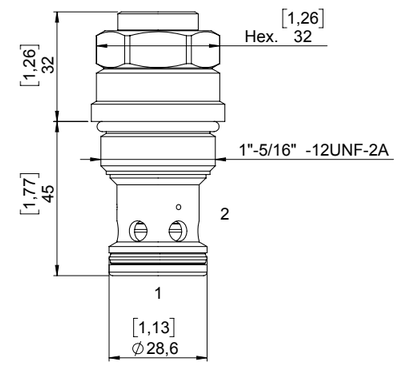

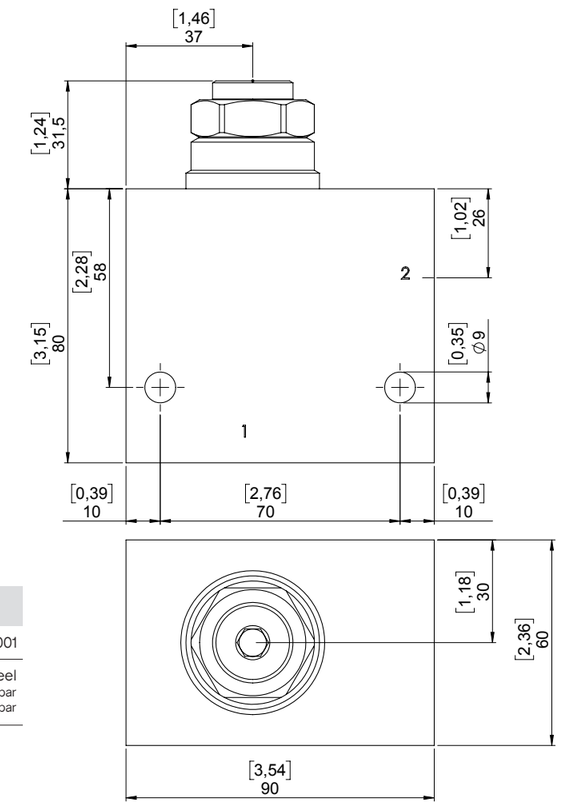

STANDARD HOUSING

Ordering code:	See page 9.05.001
Material:*	Aluminium/Steel Max working pressure for aluminum body: 210 bar Max working pressure for steel body: 350 bar

Note: To correctly select the material, in relation to application, see page S.003.

Ordering code

R16S-21 -

Seals
- None (std. NBR+Polyurethane)
- **Y**- Polyurethane
- For other options contact Sales dept.

Spring
- **A**- 1,1 bar (15,9 psi)
- **2**- 2 bar (29 psi)
- **3**- 4 bar (58 psi)

Material std. housing
- **A**- Aluminium
- **S**- Steel

Housing size ports
- None (std. only cartridge)
- **4B**- 1/2" BSP
- **5B**- 3/4" BSP
- **4S**- SAE 10
- **5S**- SAE 12

R20S-20

Check valve, poppet type

Description

Check valve, designed to hold the load or block flow in application where low leakage is requested.

Operation mode

The valve block flow from 2 to 1, while allows flow from opposite direction 1 to 2 generating e different pressure drop based on spring selection.

GENERAL DATA

Weight: 0,47 Kg (1,03 lbs).
Ambient temperature: -30 °C a 60 °C with seals standard (NBR).
Max proof pressure: 420 bar (6.090 psi).
Flow Max: 300 l/min (79 gpm).
Cartridge materials: high strength steel, internal parts hardened and grinding.

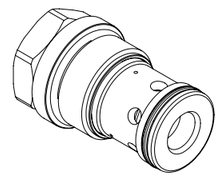

Drawing

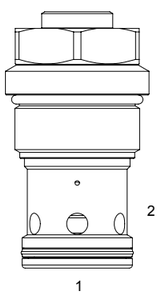

Hydraulic symbol

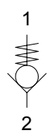

TECHNICAL DATA

HYDRAULIC

Max. working pressure:	350 bar (5.075 psi)
Flow rate:	300 l/min (79 gpm)
Fluid: *Viscosity:*	Mineral based oil From 15cSt to 250 cSt
Leakage:	0,25 cc/min (5 drops/min) P max. 350 bar (5.075 psi)
Standard seals:	O-ring NBR Seals Polyurethane
Cavity:	SCN2020
Installation torque:	100 Nm
Max contamination level:	NAS 8 ISO 4406 19/17/14
Fluid temperature range:	From -20 °C to +80 °C
Fatigue cycle life:	1.000.000 cycle at 350 bar
Seals kit std.:	5AG0030

Pressure drop

Oil viscosity: 46 cSt (217 SSU) Fluid temperature: 40 °C

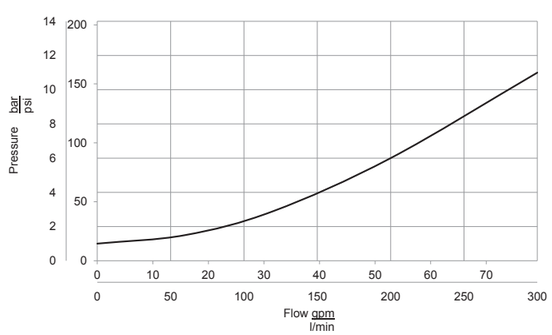

R20S-20

Inches
Millimeters

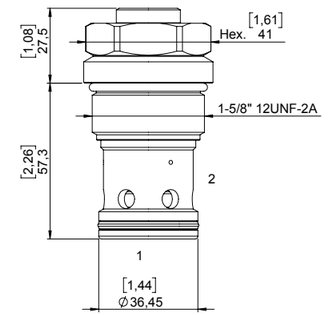

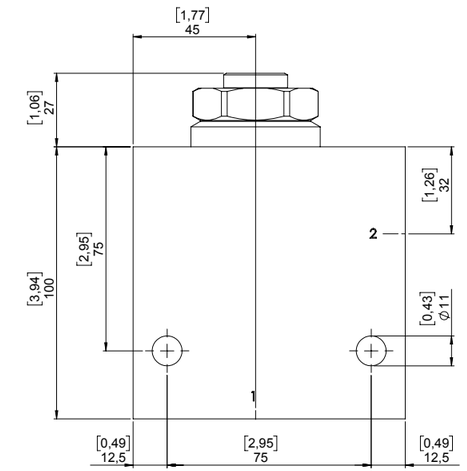

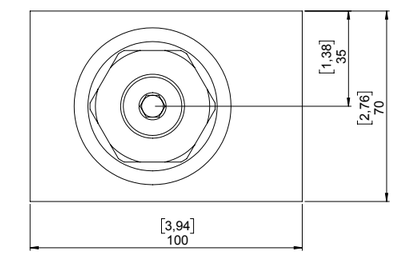

STANDARD HOUSING

Ordering code:	See page 9.06.001
Material:*	Aluminium/Steel Max working pressure for aluminum body: 210 bar Max working pressure for steel body: 350 bar

**Note:* To correctly select the material, in relation to application, see page S.003.

Ordering code

R20S-20 -

Seals
- None (std. NBR+Polyurethane)
- **Y**- Polyurethane
- For other options contact Sales dept.

Spring
- **A**- 1,1 bar (15,9 psi)
- **2**- 2 bar (29 psi)
- **3**- 4 bar (58 psi)

Material std. housing
- **A**- Aluminium
- **S**- Steel

Housing size ports
- None (std. only cartridge)
- **4B**- 1/2" BSP
- **5B**- 3/4" BSP
- **4S**- SAE 10
- **5S**- SAE 12

R20S-21

Check valve, poppet type

Description

Check valve, designed to hold the load or block flow in application where low leakage is requested.

Operation mode

The valve block flow from 2 to 1, while allows flow from opposite direction 1 to 2 generating e different pressure drop based on spring selection.

GENERAL DATA

Weight: 0,47 Kg (1,03 lbs).
Ambient temperature: -30 °C a 60 °C with seals standard (NBR).
Max proof pressure: 420 bar (6.090 psi).
Flow Max: 300 l/min (79 gpm).
Cartridge materials: high strength steel, internal parts hardened and grinding.

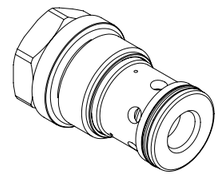

TECHNICAL DATA

HYDRAULIC

Max. working pressure:	350 bar (5.075 psi)
Flow rate:	300 l/min (79 gpm)
Fluid: *Viscosity:*	Mineral based oil From 15cSt to 250 cSt
Leakage:	0,25 cc/min (5 drops/min) P max. 350 bar (5.075 psi)
Standard seals:	O-ring NBR Seals Polyurethane
Cavity:	SCN2020
Installation torque:	100 Nm
Max contamination level:	NAS 8 ISO 4406 19/17/14
Fluid temperature range:	From -20 °C to +80 °C
Fatigue cycle life:	1.000.000 cycle at 350 bar
Seals kit std.:	5AG0030

Drawing

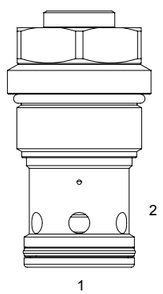

Hydraulic symbol

Pressure drop

Oil viscosity: 46 cSt (217 SSU) Fluid temperature: 40 °C

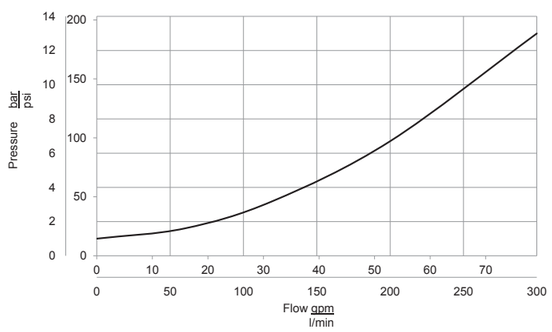

R20S-21

Inches
Millimeters

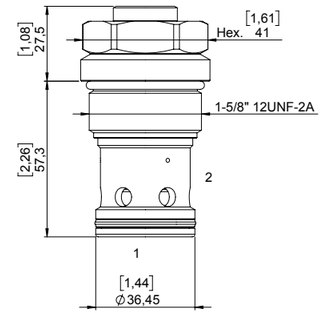

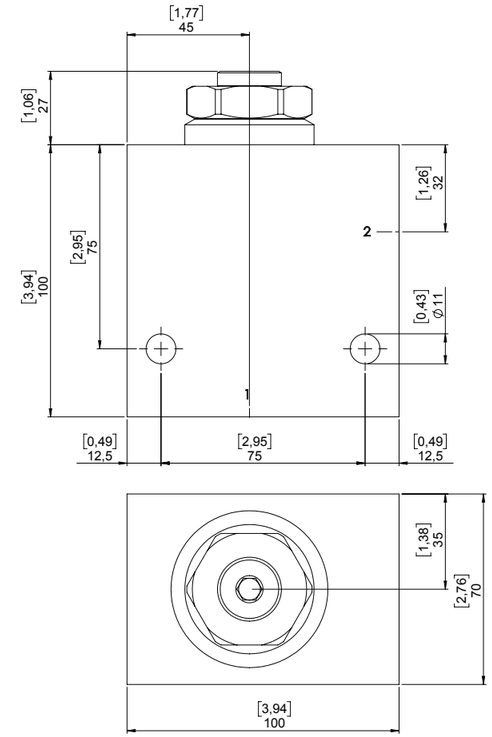

STANDARD HOUSING

Ordering code:	See page 9.06.001
Material:*	Aluminium/Steel Max working pressure for aluminum body: 210 bar Max working pressure for steel body: 350 bar

**Note:* To correctly select the material, in relation to application, see page S.003.

Ordering code

R20S-21 -

Seals
- None (std. NBR+Polyurethane)
- **Y**- Polyurethane
- For other options contact Sales dept.

Spring
- **A**- 1,1 bar (15,9 psi)
- **2**- 2 bar (29 psi)
- **3**- 4 bar (58 psi)

Material std. housing
- **A**- Aluminium
- **S**- Steel

Housing size ports
- None (std. only cartridge)
- **4B**- 1/2" BSP
- **5B**- 3/4" BSP
- **4S**- SAE 10
- **5S**- SAE 12

R08PA-10

Pilot operated check valve

Description

Pilot-operated cartridge check valve ,to be used in blocking or load-holding circuits.

Operation mode

The valve allows flow from 2 to 3, while normally blocking flow from 3 to 2. Flow will be allowed from 3 to 2 when enough pressure is created in the pilot line 1. The return spring acting on the poppet ensure the closing in static or no-load conditions.

GENERAL DATA

Weight: 0,07 Kg (0,15 lbs).
Ambient temperature range: -30 °C a 60 °C with standard seals (NBR).
Max. proof pressure: 420 bar (6.090 psi).
Flow Max: 30 l/min (7,9 gpm).
Cartridge materials: high strength steel, internal parts hardened and grinding.

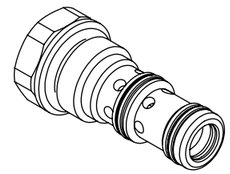

Drawing

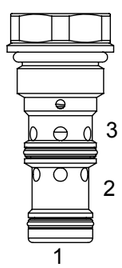

Hydraulic symbol

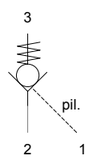

TECHNICAL DATA

HYDRAULIC

Max. working pressure:	350 bar (5.075 psi)
Flow rate:	30 l/min (7,9 gpm)
Pilot Ratio:	3:1
Fluid: *Viscosity:*	Mineral based oil From 15cSt to 250 cSt
Leakage:	0,25 cc/min (5 drops/min) P max 350 bar (5.075 psi)
Standard seals:	O-ring NBR Seals Polyurethane
Cavity:	SCN0830
Installation torque:	30 Nm
Max contamination level:	NAS 8 ISO 4406 19/17/14
Fluid temperature range:	From -20 °C to +80 °C
Seal kit std.:	5AG0021

Pressure drop

Oil viscosity: 46 cSt (217 SSU) Fluid temperature: 40 °C

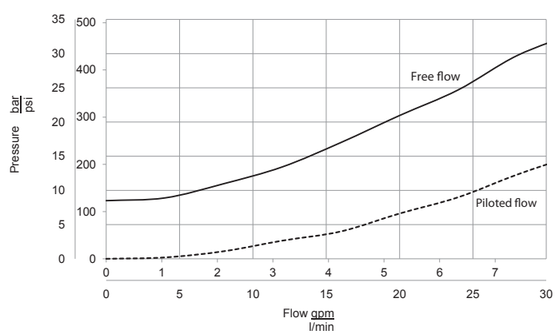

R08PA-10

Inches
Millimeters

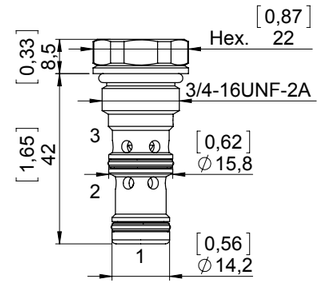

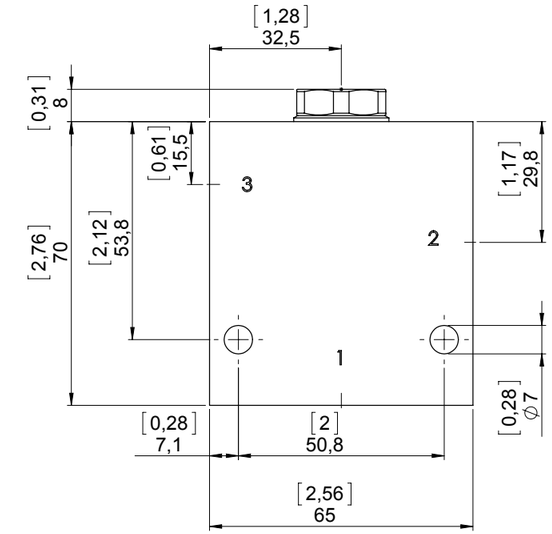

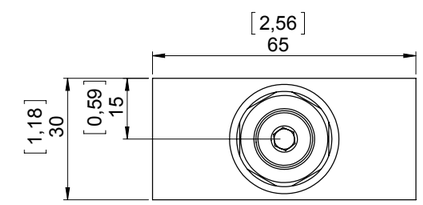

STANDARD HOUSING

Ordering code:	See page 9.02.002
Material:*	Aluminium/Steel Max working pressure for aluminum body: 210 bar Max working pressure for steel body: 350 bar

**Note:* To correctly select the material, in relation to application, see page S.003.

Ordering code

R08PA-10 - -

Seals
- None (std. NBR+Polyurethane)
- **Y**- Polyurethane
- For other options contact Sales dept.

Pilot ratio
- **D:3:1**

Spring
- **3**- 2,5 bar (36 psi)
- **5**- 6 bar (94 psi)

Material std. housing
- **A**- Aluminium
- **S**- Steel

Housing size ports
- **2B**- 1/4" BSP
- **3B**- 3/8" BSP
- **2S**- SAE 6
- **3S**- SAE 8

SPB 1/8”G Insert shuttle valve

Description

A load-shuttle, screw-in, insert valve for use in selecting circuits where a priority of flow/direction is given to a higher pressure circuit over a lower one.

Operation mode

The SPB 1/8”G will allow flow from the higher pressure of 1 or 3 port to the 2 port.
The valve is commonly used to direct oil from the pressure side of a bidirectional hydraulic motor to a pressure-released hydraulic brake. It can also be used as a load-sense signaling valve.

GENERAL DATA

Weight: 0,003 Kg (0,007 lbs).
Ambient temperature range: -30 °C a 60 °C with standard seals (NBR).
Max. proof pressure: 420 bar (6.090 psi).
Flow Max: 4 l/min (1,05 gpm).
Cartridge materials: high strength steel, internal parts hardened and grinding.

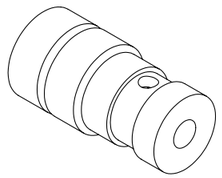

Drawing

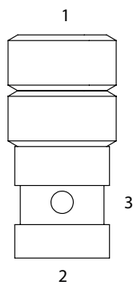

Hydraulic symbol

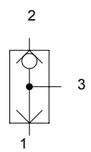

TECHNICAL DATA

HYDRAULIC

Max. working pressure:	350 bar (5.075 psi)
Flow rate:	4 l/min (1,05 gpm)
Fluid: *Viscosity:*	Mineral based oil From 15cSt to 250 cSt
Leakage:	150 cc/min P max 350 bar (5.075 psi)
Cavity:	GCW0130
Installation torque:	12 Nm
Max contamination level:	NAS 8 ISO 4406 19/17/14
Fluid temperature range:	From -20 °C to +80 °C

Pressure drop

Oil viscosity: 46 cSt (217 SSU) Fluid temperature: 40 °C

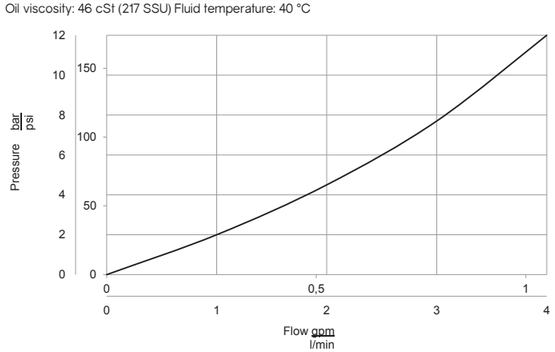

SPB 1/8”G

Inches
Millimeters

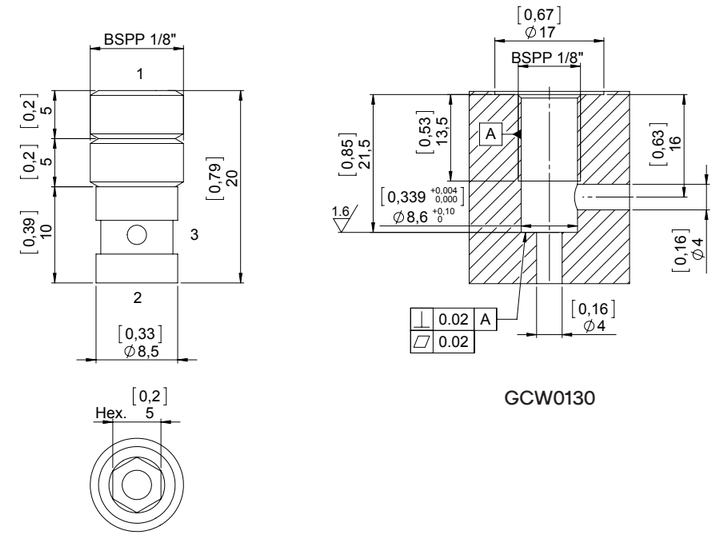

GCW0130

Ordering code

SPB 1/8”G

SL08C-1 Shuttle valve

Description

A load-shuttle, screw-in, cartridge-style, valve for use in selecting circuits where a priority of flow/direction is given to a higher pressure circuit over a lower one.

Operation mode

The SPB 1/8"G will allow flow from the higher pressure of 1 or 3 port to the 2 port.
The valve is commonly used to direct oil from the pressure side of a bidirectional hydraulic motor to a pressure-released hydraulic brake. It can also be used as a load-sense signaling valve.

GENERAL DATA

Weight: 0,07 Kg (0,15 lbs).
Ambient temperature range: -30 °C a 60 °C with standard seals (NBR).
Max. proof pressure: 420 bar (6.090 psi).
Flow Max: 30 l/min (7,9 gpm).
Cartridge materials: high strength steel, internal parts hardened and grinding.

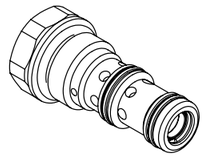

Drawing

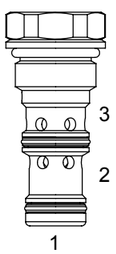

Hydraulic symbol

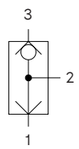

TECHNICAL DATA

HYDRAULIC	
Max. working pressure:	350 bar (5.075 psi)
Flow rate:	30 l/min (7,9 gpm)
Fluid: *Viscosity:*	Mineral based oil From 15cSt to 250 cSt
Leakage:	0,25 cc/min (5 drops/min) P max 350 bar (5.075 psi)
Cavity:	SCN0830
Installation torque:	30 Nm
Max contamination level:	NAS 8 ISO 4406 19/17/14
Fluid temperature range:	From -20 °C to +80 °C
Seal kit std.:	5AG0021

Pressure drop

Oil viscosity: 46 cSt (217 SSU) Fluid temperature: 40 °C

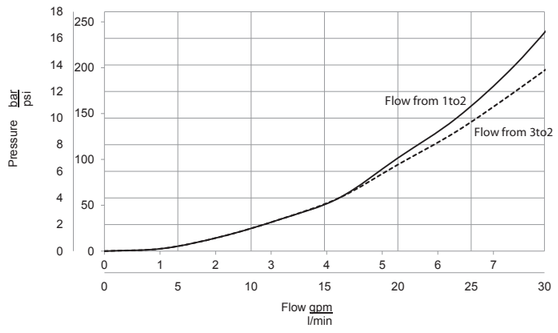

SL08C-1

Inches
Millimeters

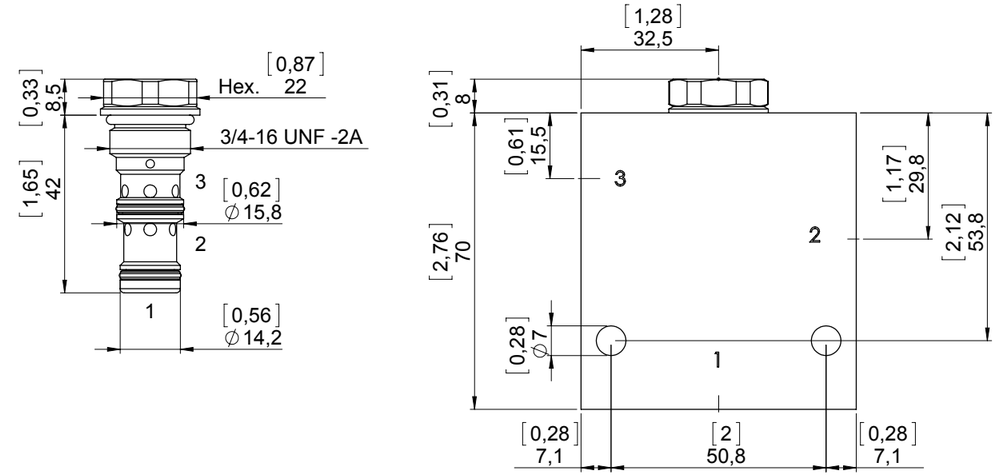

STANDARD HOUSING

Ordering code:	See page 9.02.002
Material:*	Aluminium/Steel Max working pressure for aluminum body: 210 bar Max working pressure for steel body: 350 bar

**Note:* To correctly select the material, in relation to application, see page S.003.

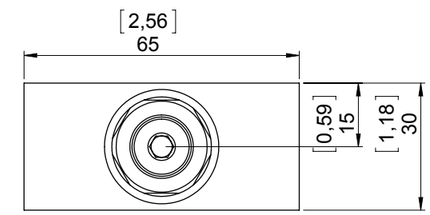

Ordering code

SL08C-1 - -

Seals
- None (std. NBR+Polyurethane)
- **Y**- Polyurethane
- For other options contact Sales dept.

Pilot ratio
- **D:3:1**

Spring

Material std. housing
- **A**- Aluminium
- **S**- Steel

Housing size ports
- **2B**- 1/4" BSP
- **3B**- 3/8" BSP
- **2S**- SAE 6
- **3S**- SAE 8

Electric valves On-Off 1.

Electro-proportional valves 2.

Pressure control valves 3.

Flow control valves 4.

Directional control valves 5.

Load control valves 6.

Special solutions 7.

Coils Standard bodies Cavity 8. 9. 10.

Service (Emergency manual override, general conditions, technical specifications) S.

C08N

Counter balance valve, direct acting, poppet type

Description

Counter balance valves give dynamic as well as static control of negative or gravitational loads by regulating the flow in and out of actuators. The counter balance valves main functions are lowering speed control and stationary load holding.

Operation mode

The check valve allows free flow into the actuator then holds and locks the load against movement. The relief valve section will give controlled movement when pilot pressure is applied. The relief section is normally set to open at a pressure at least 1.3 times the maximum load induced pressure but the pressure required to open the valve and allow movement depends on the pilot ratio of the valve. The needed pressure to open the valve and start movement of the actuator can be calculated as follows:

$$\text{Pilot Pressure} = \frac{\textit{(Relief Setting) - (Load Pressure)}}{\textit{Pilot Ratio}}$$

GENERAL DATA

Weight: 0,21 Kg (0,45 lbs).
Ambient temperature: -30 °C a 60 C° with seals standard (NBR).
Max proof pressure: 420 bar (6.090 psi).
Flow Max: 40 l/min (10 gpm).
Cartridge materials: high strength steel, internal parts hardened and grinding.

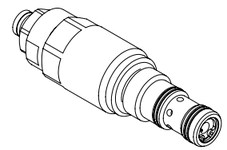

TECHNICAL DATA

HYDRAULIC	
Max. working pressure:	350 bar (5.075 psi)
Flow rate:	40 l/min (10 gpm)
Fluid: *Viscosity:*	Mineral based oil From 15cSt to 250 cSt
Leakage:	0,50 cc/min (10 drops/min) P max. 350 bar (5.075 psi)
Standard seals:	O-ring NBR Seals Polyurethane
Cavity:	SCS0830
Installation torque:	30 Nm
Installation torque nut Hex. 17:	10 Nm
Max contamination level:	NAS 8 ISO 4406 18/14
Fluid temperature range:	From -20 °C to +80 °C
Seal kit std.:	5AG0056

Drawing

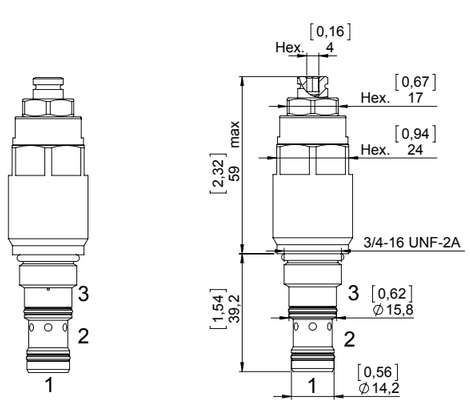

Hydraulic symbol

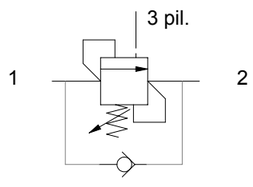

Pressure drop

Oil viscosity: 46 cSt (217 SSU) Fluid temperature: 40 °C

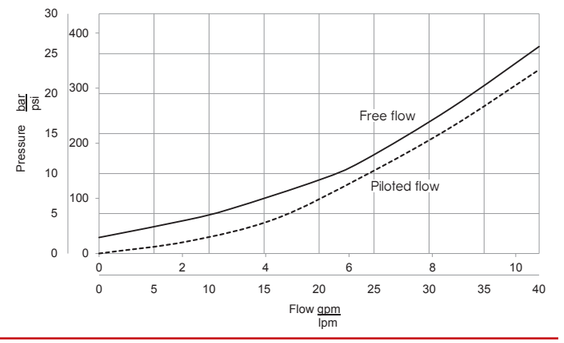

C08N

Inches
Millimeters

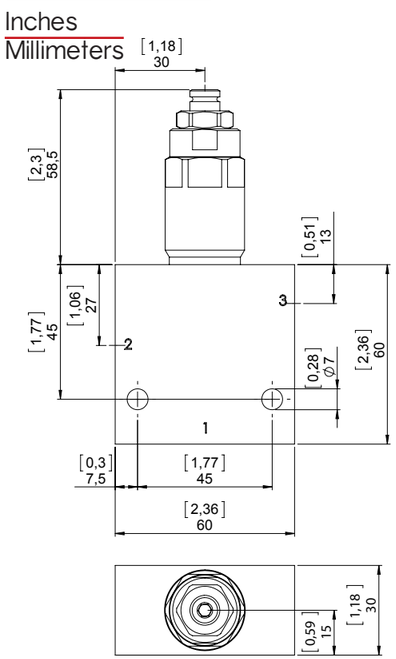

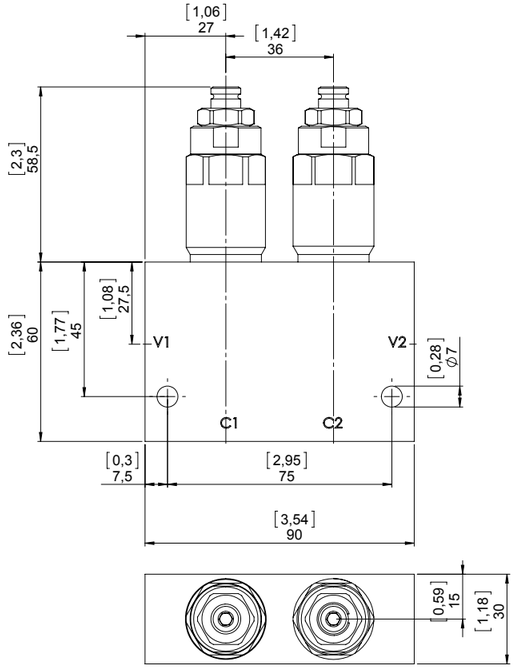

STANDARD HOUSING

Ordering code:	See page 9.02.003
Material:*	Aluminium/Steel Max working pressure for aluminum body: 210 bar Max working pressure for steel body: 350 bar

**Note:* To correctly select the material, in relation to application, see page S.003.

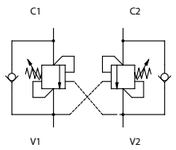

STANDARD HOUSING

Ordering code:	See page 9.02.004
Material:*	Aluminium/Steel Max working pressure for aluminum body: 210 bar Max working pressure for steel body: 350 bar

**Note:* To correctly select the material, in relation to application, see page S.003.

Ordering code

C08N- - -

Seals
- None (std. NBR+Polyurethane)
- **Y**- Polyurethane
- For other options contact Sales dept.

Spring setting

	Range	Pressure increase
2	80-200 bar (725-2.900 psi)	50 bar (725 psi)
3	180-350 bar (2.610-5.076 psi)	90 bar (1.035 psi)

Pil. ratio
- E=4:1
- G=8:1

Valve Setting
- Standard
- **000**- bar value (5 bar-72,5 psi)

Material std. housing
- **A**- Aluminium
- **S**- Steel

Housing size ports	*Double housing size ports*
2B- 1/4" BSP	**22B**- 1/4" BSP
3B- 3/8" BSP	**33B**- 3/8" BSP
2S- SAE 6	**22S**- SAE 6
3S- SAE 8	**33S**- SAE 8

C08NL

Counter balance valve, direct acting, poppet type, low flow

Description

Counter balance valves give dynamic as well as static control of negative or gravitational loads by regulating the flow in and out of actuators. The counter balance valves main functions are lowering speed control and stationary load holding.

Operation mode

The check valve allows free flow into the actuator then holds and locks the load against movement. The relief valve section will give controlled movement when pilot pressure is applied. The relief section is normally set to open at a pressure at least 1.3 times the maximum load induced pressure but the pressure required to open the valve and allow movement depends on the pilot ratio of the valve. The needed pressure to open the valve and start movement of the actuator can be calculated as follows:

$$\text{Pilot Pressure} = \frac{\textit{(Relief Setting) - (Load Pressure)}}{\textit{Pilot Ratio}}$$

GENERAL DATA

Weight: 0,21 Kg (0,45 lbs).
Ambient temperature: -30 °C a 60 °C with seals standard (NBR).
Max proof pressure: 420 bar (6.090 psi).
Flow Max: 15l/min (4gpm).
Cartridge materials: high strength steel, internal parts hardened and grinding.

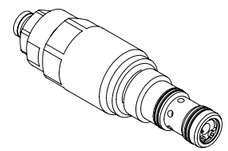

TECHNICAL DATA

HYDRAULIC

Max. working pressure:	350 bar (5.075 psi)
Flow rate:	15 l/min (4 gpm)
Fluid: *Viscosity:*	Mineral based oil From 15cSt to 250 cSt
Leakage:	0,25 cc/min (5 drops/min) P max. 350 bar (5.075 psi)
Standard seals:	O-ring NBR Seals Polyurethane
Cavity:	SCS0830
Installation torque:	30 Nm
Installation torque nut Hex. 17:	10 Nm
Max contamination level:	NAS 8 ISO 4406 19/17/14
Fluid temperature range:	From -20 °C to +80 °C
Seal kit std.:	5AG0056

Drawing

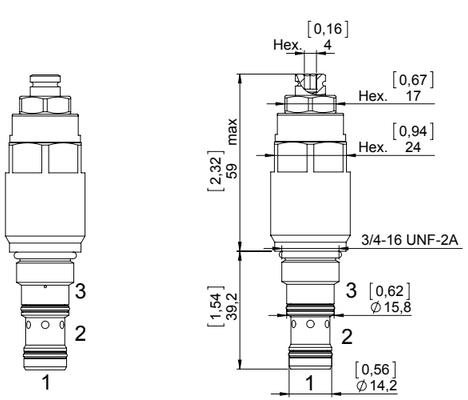

Hydraulic symbol

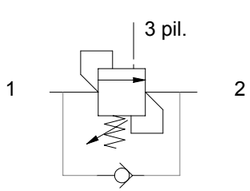

Pressure drop

Oil viscosity: 46 cSt (217 SSU) Fluid temperature: 40 °C

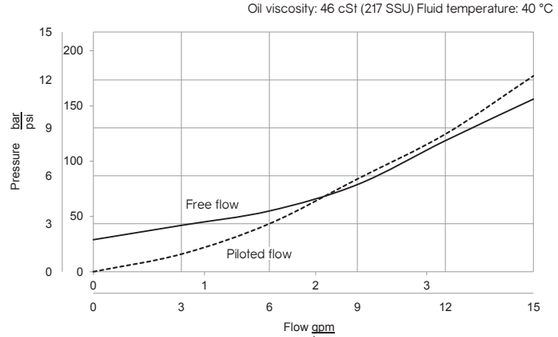

C08NL

Inches
Millimeters

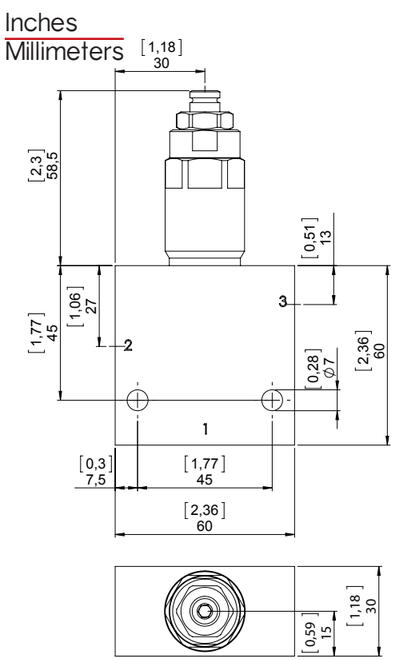

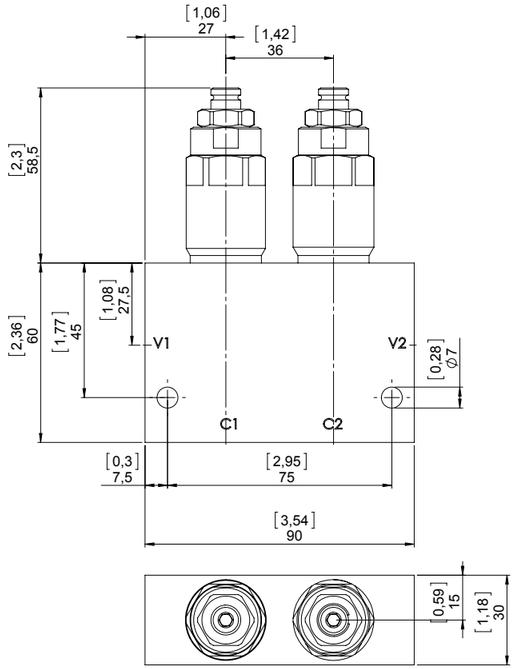

STANDARD HOUSING

Ordering code:	See page 9.02.003
Material:*	Aluminium/Steel Max working pressure for aluminum body: 210 bar Max working pressure for steel body: 350 bar

**Note:* To correctly select the material, in relation to application, see page S.003.

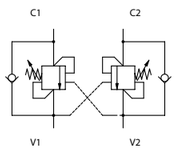

STANDARD HOUSING

Ordering code:	See page 9.02.004
Material:*	Aluminium/Steel Max working pressure for aluminum body: 210 bar Max working pressure for steel body: 350 bar

**Note:* To correctly select the material, in relation to application, see page S.003.

Ordering code

C08NL - - -

Seals
- None (std. NBR+Polyurethane)
- **Y**- Polyurethane
- For other options contact Sales dept.

Spring setting

	Range	Pressure increase
3	180-350 bar (2.610-5.076 psi)	90 bar (1.035 psi)

Pil. ratio
- C=3:1

Valve Setting
- Standard
- **000**- bar value (5 bar-72,5 psi)

Material std. housing
- **A**- Aluminium
- **S**- Steel

Housing size ports	*Double housing size ports*
2B- 1/4" BSP	**22B**- 1/4" BSP
3B- 3/8" BSP	**33B**- 3/8" BSP
2S- SAE 6	**22S**- SAE 6
3S- SAE 8	**33S**- SAE 8

C08C

Counter balance valve, direct acting, poppet type, fully compensated

Description

Counter balance valves give dynamic as well as static control of negative or gravitational loads by regulating the flow in and out of actuators. The counter balance valves main functions are lowering speed control and stationary load holding and in case of the "C" version is able to relieve and stay open irrespective of downstream pressure. This enables the valve to operate when used with a closed port in center directional control valve, which has port service line reliefs. The poppet is pressure balanced, preventing relief setting increase due to back pressure. The pilot opening of the valve is not influenced by additive back pressure at port 2.

Operation mode

The check valve allows free flow into the actuator then holds and locks the load against movement. The relief valve section will give controlled movement when pilot pressure is applied. The relief section is normally set to open at a pressure at least 1.3 times the maximum load induced pressure but the pressure required to open the valve and allow movement depends on the pilot ratio of the valve. The needed pressure to open the valve and start movement of the actuator can be calculated as follows:

$$\text{Pilot Pressure} = \frac{(\text{Relief Setting}) - (\text{Load Pressure})}{\text{Pilot Ratio}}$$

GENERAL DATA

Weight: 0,21 Kg (0,45 lbs).
Ambient temperature: -30 °C a 60 °C with seals standard (NBR).
Max proof pressure: 420 bar (6.090 psi).
Flow Max: 40l/min (10gpm).
Cartridge materials: high strength steel, internal parts hardened and grinding.

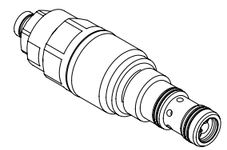

TECHNICAL DATA

HYDRAULIC

Max. working pressure:	350 bar (5.075 psi)
Flow rate:	40 l/min (10 gpm)
Fluid: *Viscosity:*	Mineral based oil From 15cSt to 250 cSt
Leakage:	0,25 cc/min (5 drops/min) P max. 350 bar (5.075 psi)
Standard seals:	O-ring NBR Seals Polyurethane
Cavity:	SCS0830
Installation torque:	30 Nm
Installation torque nut Hex. 17:	10 Nm
Max contamination level:	NAS 8 ISO 4406 19/17/14
Fluid temperature range:	From -20 °C to +80 °C
Seal kit std.:	5AG0056

Drawing

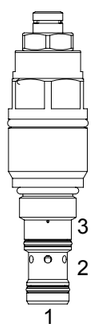

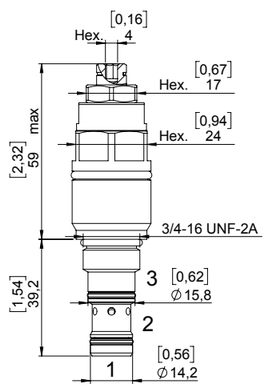

Hydraulic symbol

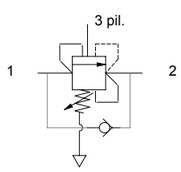

Pressure drop

Oil viscosity: 46 cSt (217 SSU) Fluid temperature: 40 °C

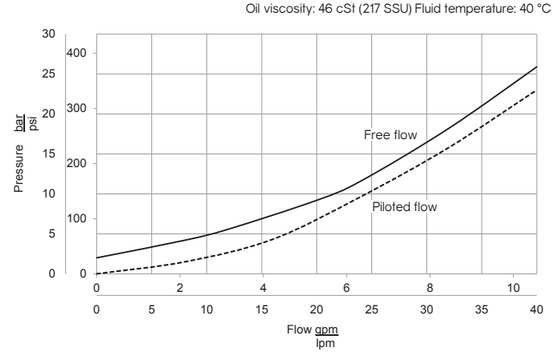

C08C

Inches
Millimeters

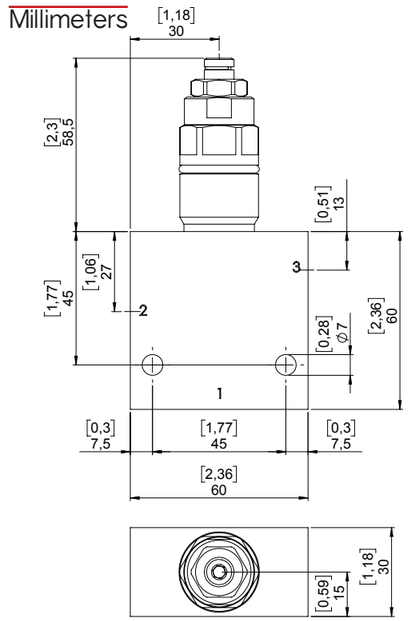

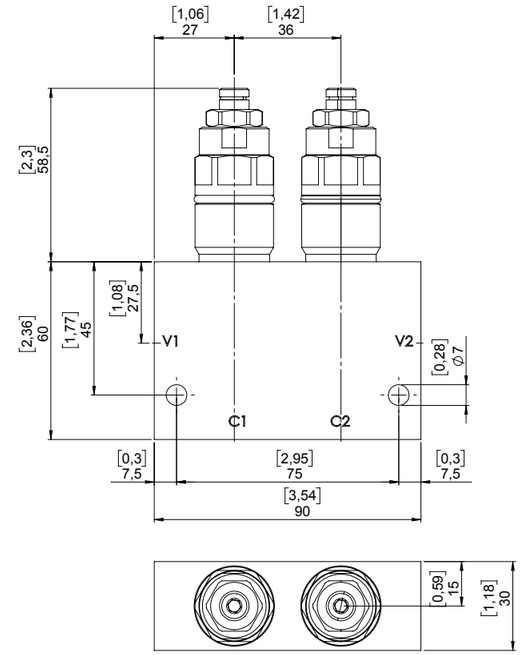

STANDARD HOUSING

Ordering code:	See page 9.02.003
Material:*	Aluminium/Steel Max working pressure for aluminum body: 210 bar Max working pressure for steel body: 350 bar

**Note:* To correctly select the material, in relation to application, see page S.003.

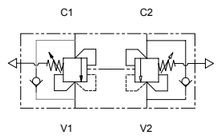

STANDARD HOUSING

Ordering code:	See page 9.02.004
Material:*	Aluminium/Steel Max working pressure for aluminum body: 210 bar Max working pressure for steel body: 350 bar

**Note:* To correctly select the material, in relation to application, see page S.003.

Ordering code

C08C- - -

Seals
- None (std. NBR+Polyurethane)
- **Y**- Polyurethane
- For other options contact Sales dept.

Spring setting

	Range	Pressure increase
2	80-200 bar (725-2.900 psi)	50 bar (725 psi)
3	180-350 bar (2.610-5.076 psi)	90 bar (1.035 psi)

Pil. ratio
- E=4:1
- G=8:1

Valve Setting
- Standard
- **000**- bar value (5 bar-72,5 psi)

Material std. housing
- **A**- Aluminium
- **S**- Steel

Housing size ports
- **2B**- 1/4" BSP
- **3B**- 3/8" BSP
- **2S**- SAE 6
- **3S**- SAE 8

Double housing size ports
- **22B**- 1/4" BSP
- **33B**- 3/8" BSP
- **22S**- SAE 6
- **33S**- SAE 8

C10N

Counter balance valve, direct acting, poppet type

Description

Counter balance valves give dynamic as well as static control of negative or gravitational loads by regulating the flow in and out of actuators. The counter balance valves main functions are lowering speed control and stationary load holding.

Operation mode

The check valve allows free flow into the actuator then holds and locks the load against movement. The relief valve section will give controlled movement when pilot pressure is applied. The relief section is normally set to open at a pressure at least 1.3 times the maximum load induced pressure but the pressure required to open the valve and allow movement depends on the pilot ratio of the valve.

The needed pressure to open the valve and start movement of the actuator can be calculated as follows:

$$\text{Pilot Pressure} = \frac{\text{Relief Setting) - (Load Pressure)}}{\text{Pilot Ratio}}$$

GENERAL DATA

Weight: 0,27 Kg (0,6 lbs).
Ambient temperature: -30 °C a 60 °C with seals standard (NBR).
Max proof pressure: 420 bar (6.090 psi).
Flow Max: 60 l/min (15,9 gpm).
Cartridge materials: high strength steel, internal parts hardened and grinding.

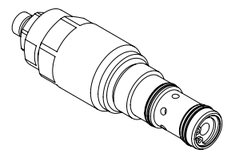

TECHNICAL DATA	
HYDRAULIC	
Max. working pressure:	350 bar (5.075 psi)
Flow rate:	60 l/min (15,9 gpm)
Fluid: *Viscosity:*	Mineral based oil From 15cSt to 250 cSt
Leakage:	0,25 cc/min (5 drops/min) P max. 350 bar (5.075 psi)
Standard seals:	O-ring NBR Seals Polyuretane
Cavity:	SCS1030
Installation torque:	40 Nm
Installation torque nut Hex. 17:	10 Nm
Max contamination level:	NAS 8 ISO 4406 19/17/14
Fluid temperature range:	From -20 to +80 °C
Seals kit std.:	5AG0040

Drawing

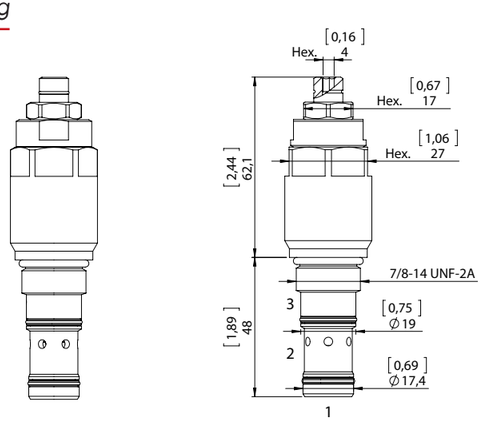

Hydraulic symbol

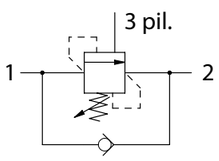

Pressure drop

Oil viscosity: 46 cSt (217 SSU) Fluid temperature: 40 °C

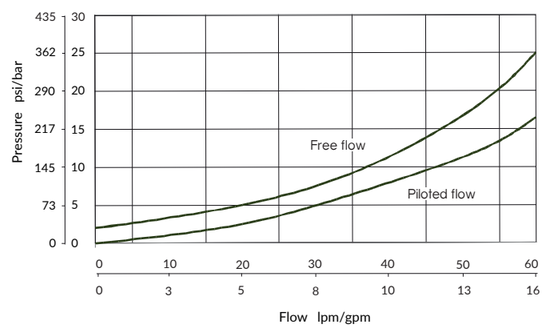

C10N

Inches
Millimeters

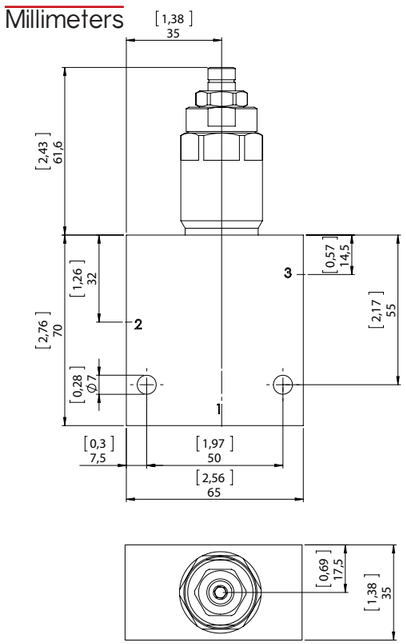

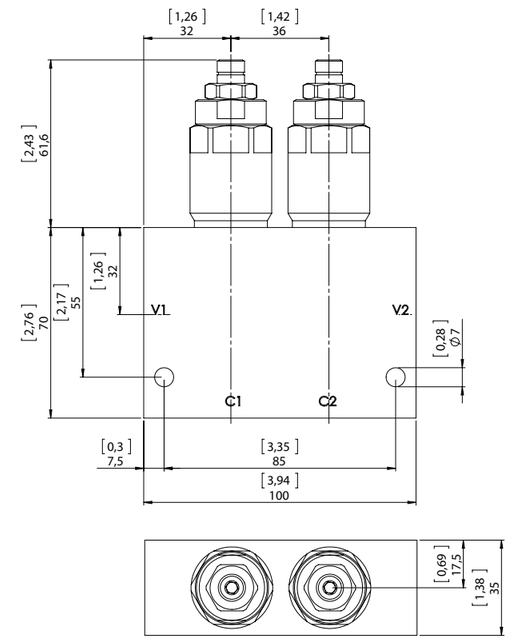

STANDARD HOUSING	
Ordering code:	See page 9.03.003
Material:*	Aluminium/Steel Max working pressure for aluminum body: 210 bar Max working pressure for steel body: 350 bar

**Note:* To correctly select the material, in relation to application, see page S.003.

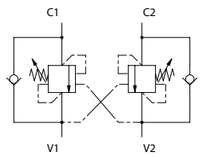

STANDARD HOUSING	
Ordering code:	See page 9.03.004
Material:*	Aluminium/Steel Max working pressure for aluminum body: 210 bar Max working pressure for steel body: 350 bar

**Note:* To correctly select the material, in relation to application, see page S.003.

Ordering code

C10N- - -

Seals
- None (std. NBR+Polyurethane)
- **Y**- Polyurethane
- For other options contact Sales dept.

Spring setting

	Range	Pressure increase
2	80-200 bar (725-2.900 psi)	50 bar (725 psi)
3	180-350 bar (2.610-5.076 psi)	90 bar (1.035 psi)

Pil. ratio
- E=4:1
- G=8:1

Valve Setting
- Standard
- **000**- bar value (5 bar-72,5 psi)

Material std. housing
- **A**- Aluminium
- **S**- Steel

Housing size ports	*Double housing size ports*
3B- 3/8" BSP	**33B**- 3/8" BSP
4B- 1/2" BSP	**44B**- 1/2" BSP
3S- SAE 8	**33S**- SAE8
4S- SAE 10	**44S**- SAE 10

C10S

Counter balance valve, direct acting, poppet type, relief compensated

Description

Counter balance valves give dynamic as well as static control of negative or gravitational loads by regulating the flow in and out of actuators. The counter balance valves main functions are lowering speed control and stationary load holding and in case of the "S" version is able to relieve and stay open irrespective of downstream pressure. This enables the valve to operate when used with a closed port in center directional control valve, which has port service line reliefs. The poppet is pressure balanced, preventing relief setting increase due to back pressure. However the pilot opening of the valve remains influenced by additive back pressure at port 2.

Operation mode

The check valve allows free flow into the actuator then holds and locks the load against movement. The relief valve section will give controlled movement when pilot pressure is applied. The relief section is normally set to open at a pressure at least 1.3 times the maximum load induced pressure but the pressure required to open the valve and allow movement depends on the pilot ratio of the valve. The needed pressure to open the valve and start movement of the actuator can be calculated as follows:

$$\text{Pilot Pressure} = \frac{\text{(Relief Setting) - (Load Pressure)}}{\text{Pilot Ratio}}$$

GENERAL DATA

Weight: 0,27 Kg (0,6 lbs).
Ambient temperature: -30 °C a 60 °C with seals standard (NBR).
Max proof pressure: 420 bar (6.090 psi).
Flow Max: 60 l/min (15,9 gpm).
Cartridge materials: high strength steel, internal parts hardened and grinding.

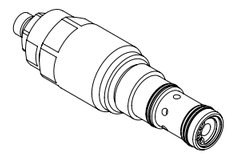

TECHNICAL DATA	
HYDRAULIC	
Max. working pressure:	350 bar (5.075 psi)
Flow rate:	60 l/min (15,9 gpm)
Fluid: Viscosity:	Mineral based oil From 15cSt to 250 cSt
Leakage:	0,25 cc/min (5 drops/min) P max. 350 bar (5.075 psi)
Standard seals:	O-ring NBR Seals + Polyurethane
Cavity:	SCS1030
Installation torque:	40 Nm
Installation torque nut Hex. 17:	10 Nm
Max contamination level:	NAS 8 ISO 4406 19/17/14
Fluid temperature range:	From -20 to +80 °C
Seals kit std.:	5AG0040

Drawing

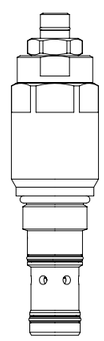

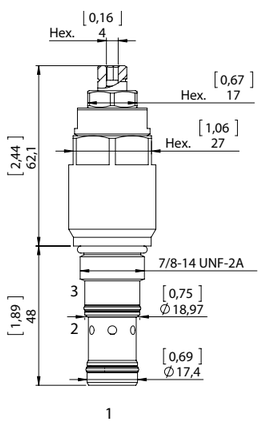

Hydraulic symbol

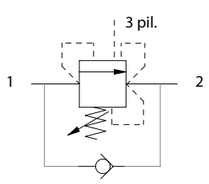

Pressure drop

Oil viscosity: 46 cSt (217 SSU) Fluid temperature: 40 °C

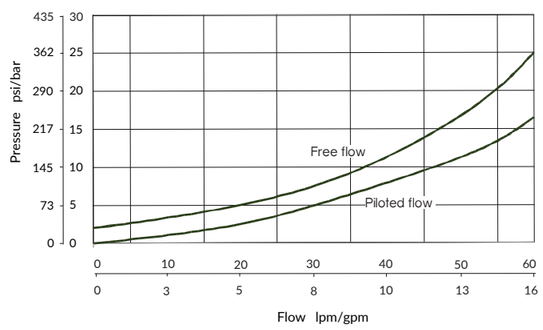

C10S

Inches
Millimeters

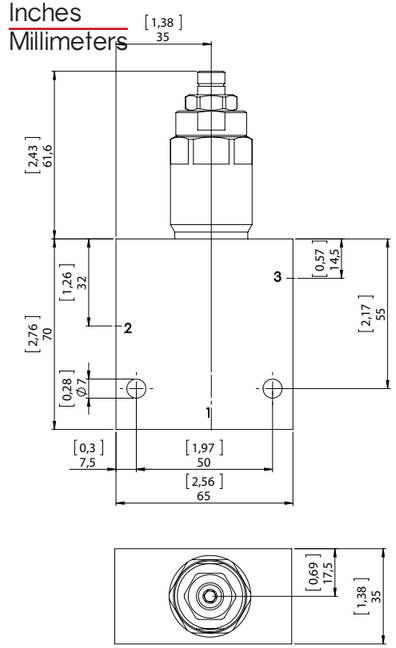

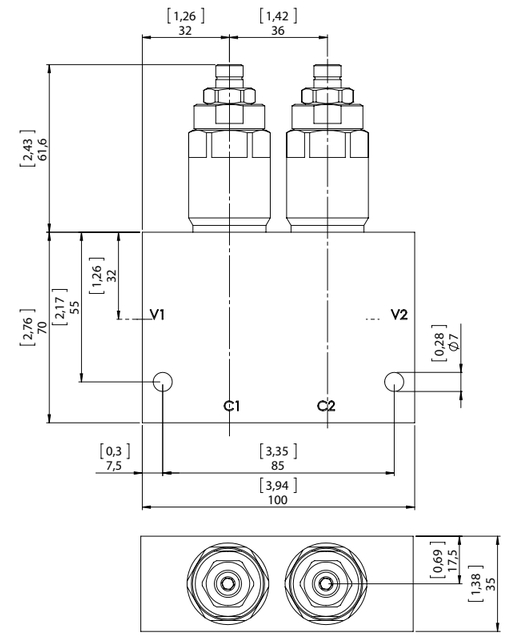

STANDARD HOUSING

Ordering code:	See page 9.03.003
Material*:	Aluminium/Steel Max working pressure for aluminum body: 210 bar Max working pressure for steel body: 350 bar

*Note: To correctly select the material, in relation to application, see page S.003.

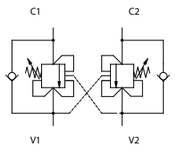

STANDARD HOUSING

Ordering code:	See page 9.03.004
Material*:	Aluminium/Steel Max working pressure for aluminum body: 210 bar Max working pressure for steel body: 350 bar

*Note: To correctly select the material, in relation to application, see page S.003.

Ordering code

C10S- - -

Seals
- None (std. NBR+Polyurethane)
- Y- Polyurethane
- For other options contact Sales dept.

Spring setting

	Range	Pressure increase
2	80-200 bar (725-2.900 psi)	50 bar (725 psi)
3	180-350 bar (2.610-5.076 psi)	90 bar (1.035 psi)

Pil. ratio
- E=4:1
- G=8:1

Valve Setting
- Standard
- 000- bar value (5 bar-72,5 psi)

Material std. housing
- A- Aluminium
- S- Steel

Housing size ports
- 3B- 3/8" BSP
- 4B- 1/2" BSP
- 3S- SAE 8
- 4S- SAE 10

Double housing size ports
- 33B- 3/8" BSP
- 44B- 1/2" BSP
- 33S- SAE8
- 44S- SAE 10

Electric valves On-Off 1.

Electro-proportional valves 2.

Pressure control valves 3.

Flow control valves 4.

Directional control valves 5.

Load control valves 6.

Special solutions 7.

Coils, standard bodies, cavities 8. 9. 10.

Service (Emergency manual override, general conditions, technical specifications) S.

MP01-A

Double proportional pressure reducing valve block

Description

Double proportional pressure reducing valve block designed to pilot in both directions any be-directional spool device.

Operation mode

Energizing the coil with a variable current (see diagram) a change of the pressure is obtained, proportional to the supplied current. By connecting the ports X and Y to a spool device with spring feedback it generates a linear proportional movement of the spool itself.

GENERAL DATA

Weight of 1 section with coils: 0,545 Kg (1,2 lbs).
Ambient temperature range: -30 C° a 60 C° with seals standard (NBR).
Max proof pressure: 50 bar (725 psi).
Flow Max: 4 l/min (1,05 gpm).
Cartridge materials: high strength steel, internal parts hardened and grinding.

Drawing

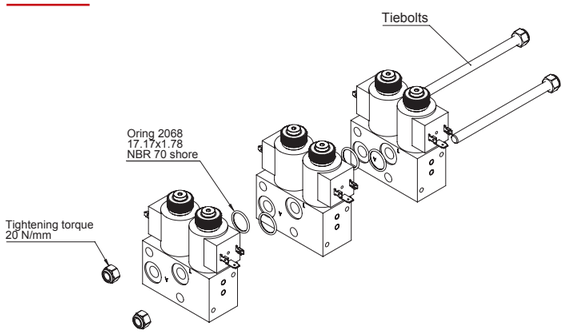

TECHNICAL DATA	
HYDRAULIC	
Max. flow rate:	4 l/min (1,05 gpm)
Maximum pressure in L:	1 bar
Maximum pressure in V:	50 bar (725 psi)
Maximum pressure reduced in X/X1:	14/30 bar (3,7/7,9 psi)
Max current at 12 Vcc:	1500 mA
Max current at 24 Vcc:	750 mA
PWM:	70 Hz
Seals material:	NBR
Viscosity at 40°C:	46 cSt
Recommended cleanliness:	ISO4406 18/14
Viscosity:	15-250 cSt
Body material:	Aluminium
Ports dimensions V,L,X,X1,Y,Y1:	G 1/4"

TIEBOLTS KIT		
N° of sections	*Ordering code*	*Length*
2	5AA0000	M8x89
3	5AA0001	M8x123
4	5AA0002	M8x157
5	5AA0003	M8x191
6	5AA0004	M8x225

Hydraulic symbol

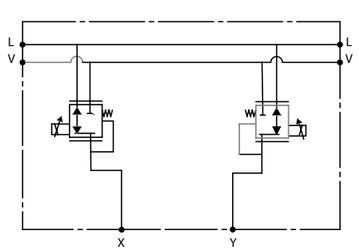

Pressure drop

Oil viscosity: 32cSt/200 Fluid temperature: 40° C

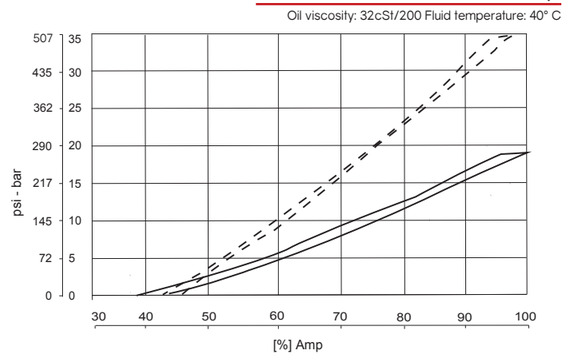

MP01-A

Inches
Millimeters

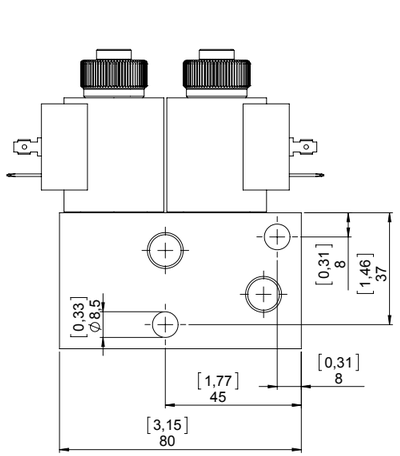

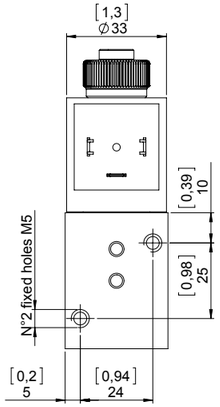

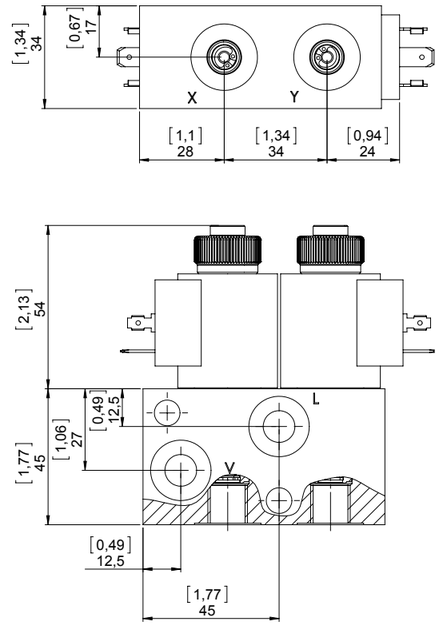

Ordering code

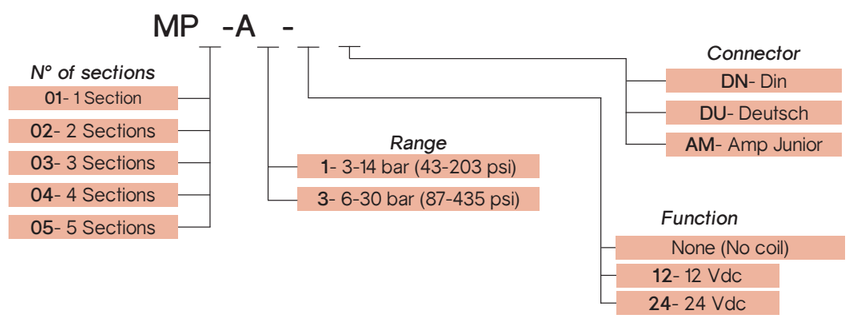

MP01-B

Double proportional pressure reducing valve block

Description

Double proportional pressure reducing valve block designed to pilot in both directions any be-directional spool device.

Operation mode

Energizing the coil with a variable current (see diagram) a change of the pressure is obtained, proportional to the supplied current. By connecting the ports X and Y to a spool device with spring feedback it generates a linear proportional movement of the spool itself.

GENERAL DATA

Weight of 1 section with coils: 0,72 Kg (1,58 lbs).
Ambient temperature range: -30 C° a 60 C° with seals standard (NBR).
Max proof pressure: 50 bar (725 psi).
Flow Max: 4 l/min (1,05 gpm).
Cartridge materials: high strength steel, internal parts hardened and grinding.

TECHNICAL DATA

HYDRAULIC

Max. flow rate:	4 l/min (1,05 gpm)
Maximum pressure in L:	1 bar
Maximum pressure in V:	50 bar (725 psi)
Maximum pressure reduced in X/X1:	14/30 bar (3,7/7,9 psi)
Max current at 12 Vcc:	1500 mA
Max current at 24 Vcc:	750 mA
PWM:	70 Hz
Seals material:	NBR
Viscosity at 40°C:	46 cSt
Recommended cleanliness:	ISO4406 18/14
Viscosity:	15-250 cSt
Body material:	Aluminium
Ports dimensions V,L,X,X1,Y,Y1:	G 1/4"

Drawing

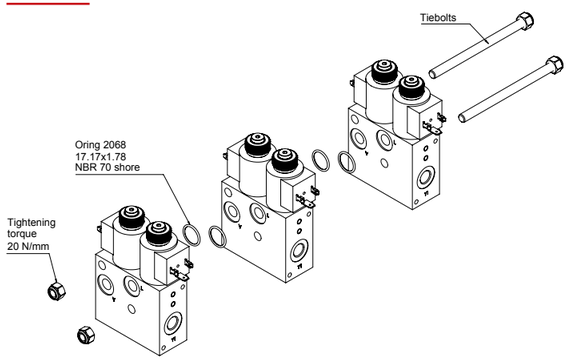

TIEBOLTS KIT

N° of sections	*Ordering code*	*Length*
2	5AA0000	M8x89
3	5AA0001	M8x123
4	5AA0002	M8x157
5	5AA0003	M8x191
6	5AA0004	M8x225

Hydraulic symbol

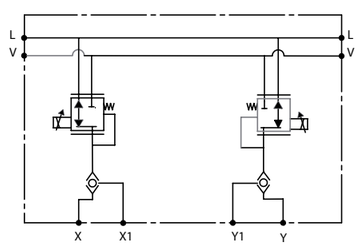

Pressure drop

Oil viscosity: 32cSt/200 Fluid temperature: 40° C

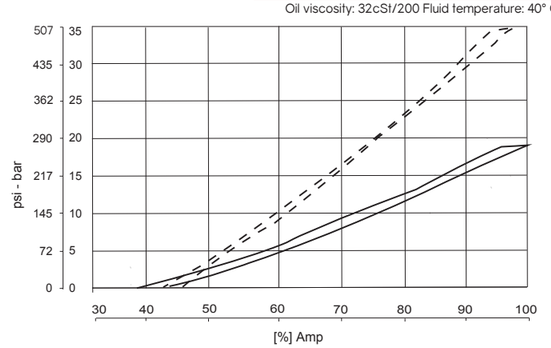

MP01-B

Inches
Millimeters

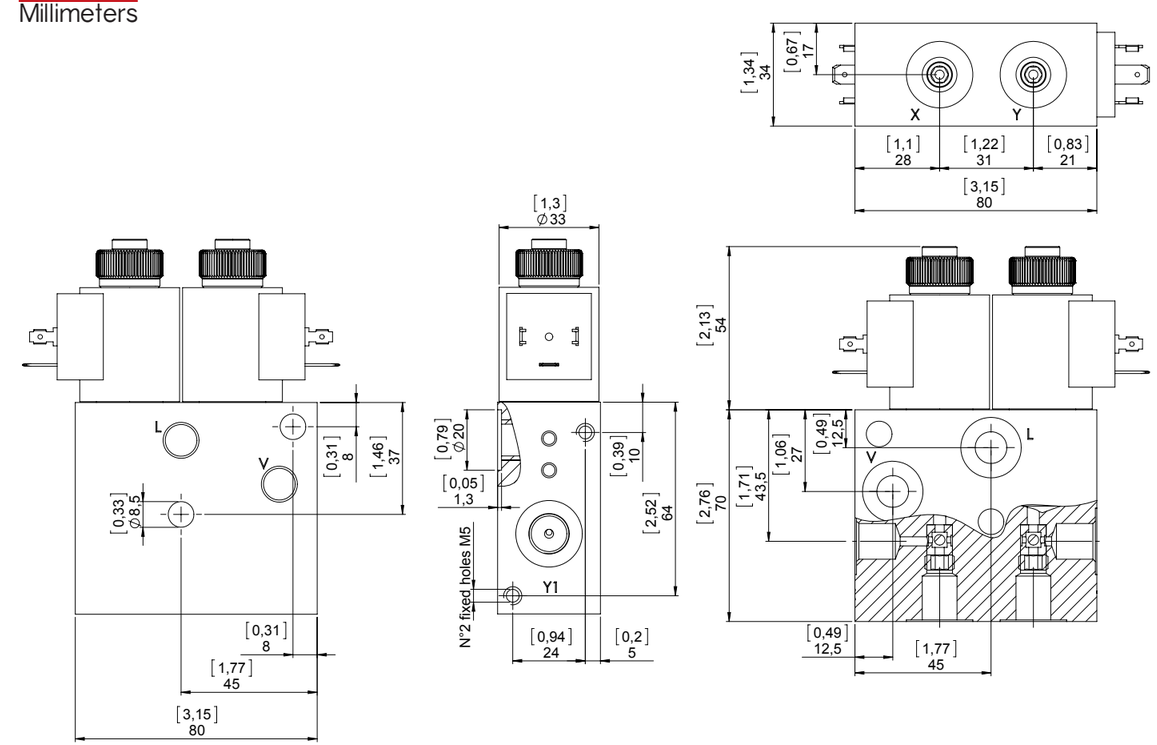

Ordering code

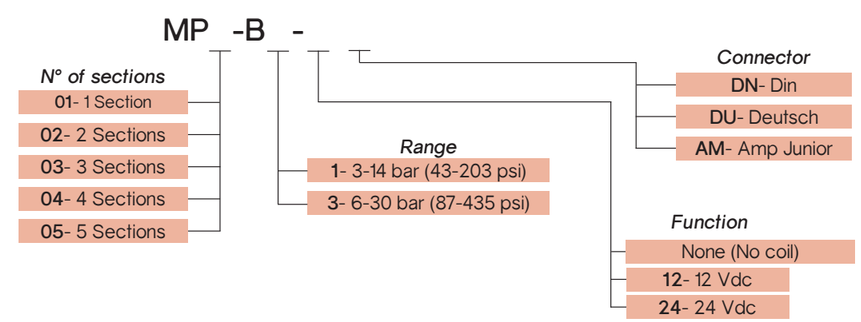

Electric valves On-Off 1.

Electro-proportional valves 2.

Pressure control valves 3.

Flow control valves 4.

Directional control valves 5.

Load control valves 6.

Special solutions 7.

Coils Standard bodies Cavity 8. 9. 10.

Service (Emergency manual override, general conditions, technical specifications) S.

S130-18P On-off Coil

Drawing

Inches
Millimeters

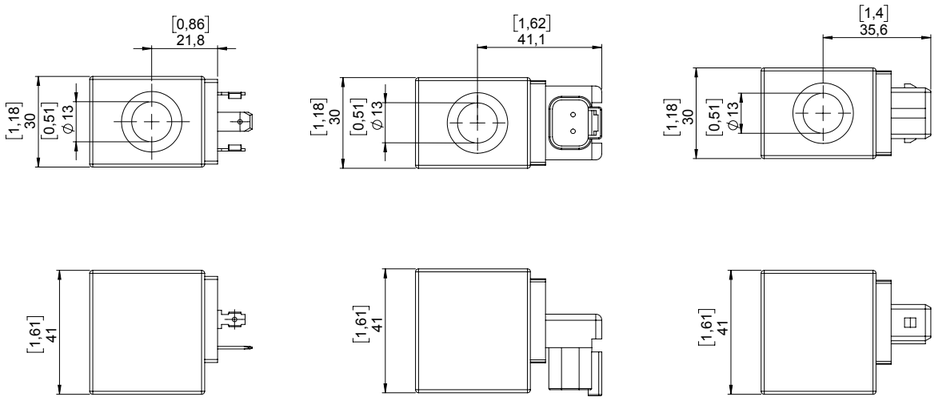

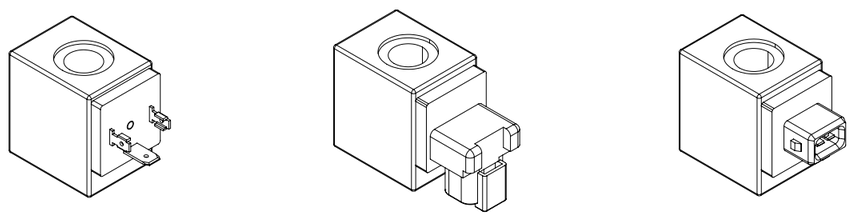

Electric symbol

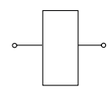

Ordering code	Connector	Voltage +/- 10%	Power at 20 °C	Resistance +/- 10% at 20 °C	ED*	Insulation class	Wire Insulation class	Protection class with connector installed
S130-12DN-18P	DIN 43650	12 Vdc	18 W	7,5 Ω	100% with ambient temperature -20 °C +40 °C	F	H	IP 65
S130-24DN-18P	DIN 43650	24 Vdc	18 W	30,1 Ω	100% with ambient temperature -20 °C +40 °C	F	H	IP 65
S130-12DU-18P	DEUTSCH DT-02	12 Vdc	18 W	7,5 Ω	100% with ambient temperature -20 °C +40 °C	F	H	IP 65
S130-24DU-18P	DEUTSCH DT-02	24 Vdc	18 W	30,1 Ω	100% with ambient temperature -20 °C +40 °C	F	H	IP 65
S130-12AM-18P	AMP JUNIOR	12 Vdc	18 W	7,5 Ω	100% with ambient temperature -20 °C +40 °C	F	H	IP 65
S130-24AM-18P	AMP JUNIOR	24 Vdc	18 W	30,1 Ω	100% with ambient temperature -20 °C +40 °C	F	H	IP 65

***Note:** For temperature or special conditions contact our technical department.

S130-20S On-off Coil

Drawing

Inches
Millimeters

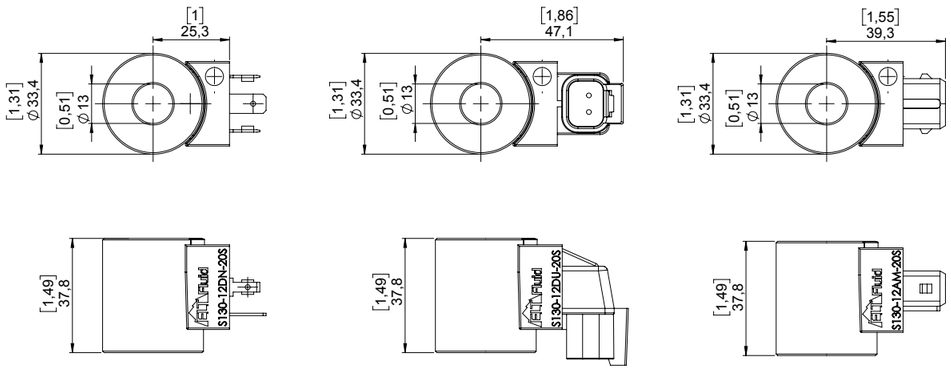

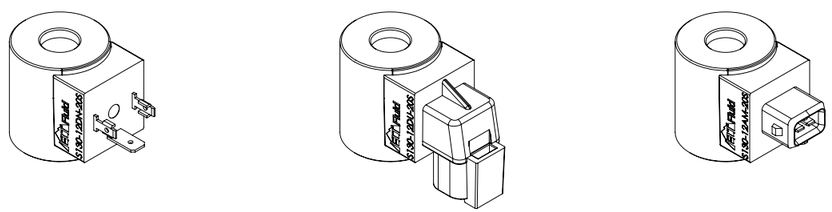

Electric symbol

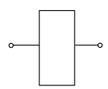

Ordering code	Connector	Voltage +/- 10%	Power at 20 °C	Resistance +/- 10% at 20 °C	ED*	Insulation class	Wire Insulation class	Protection class with connector installed
S130-12DN-20S	DIN 43650	12 Vdc	20,5 W	6,6 Ω	100% with ambient temperature -20 °C +40 °C	H	H	IP 65
S130-24DN-20S	DIN 43650	24 Vdc	20,5 W	27 Ω	100% with ambient temperature -20 °C +40 °C	H	H	IP 65
S130-12DU-20S	DEUTSCH DT-02	12 Vdc	20,5 W	6,6 Ω	100% with ambient temperature -20 °C +40 °C	H	H	IP 67
S130-24DU-20S	DEUTSCH DT-02	24 Vdc	20,5 W	27 Ω	100% with ambient temperature -20 °C +40 °C	H	H	IP 67
S130-12AM-20S	AMP JUNIOR	12 Vdc	20,5 W	6,6 Ω	100% with ambient temperature -20 °C +40 °C	H	H	IP 67
S130-24AM-20S	AMP JUNIOR	24 Vdc	20,5 W	27 Ω	100% with ambient temperature -20 °C +40 °C	H	H	IP 67

***Note:** For temperature or special conditions contact our technical department.

S130-22S Proportional Coil

Drawing

Inches
Millimeters

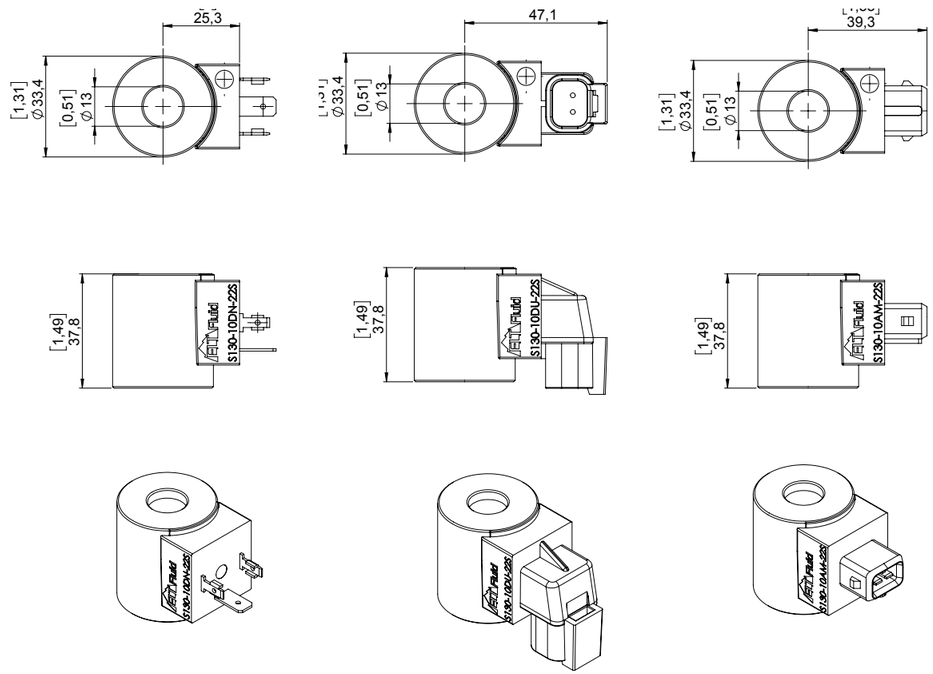

Electric symbol

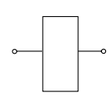

Ordering code	Connector	Voltage +/- 10%	Max. current	Resistance +/- 10% at 20 °C	ED* at max. current indicated	Insulation class	Wire Insulation class	Protection class with connector installed
S130-10DN-22S	DIN 43650	12 Vdc	1500 mA	4,7 Ω	100% with ambient temperature -20 °C +40 °C	H	H	IP 65
S130-20DN-22S	DIN 43650	24 Vdc	750 mA	18,8 Ω	100% with ambient temperature -20 °C +40 °C	H	H	IP 65
S130-10DU-22S	DEUTSCH DT-02	12 Vdc	1500 mA	4,7 Ω	100% with ambient temperature -20 °C +40 °C	H	H	IP 67
S130-20DU-22S	DEUTSCH DT-02	24 Vdc	750 mA	18,8 Ω	100% with ambient temperature -20 °C +40 °C	H	H	IP 67
S130-10AM-22S	AMP JUNIOR	12 Vdc	1500 mA	4,7 Ω	100% with ambient temperature -20 °C +40 °C	H	H	IP 67
S130-20AM-22S	AMP JUNIOR	24 Vdc	750 mA	18,8 Ω	100% with ambient temperature -20 °C +40 °C	H	H	IP 67

***Note:** For temperature or special conditions contact our technical department.

S190-24S On-off Coil

Drawing

Inches
Millimeters

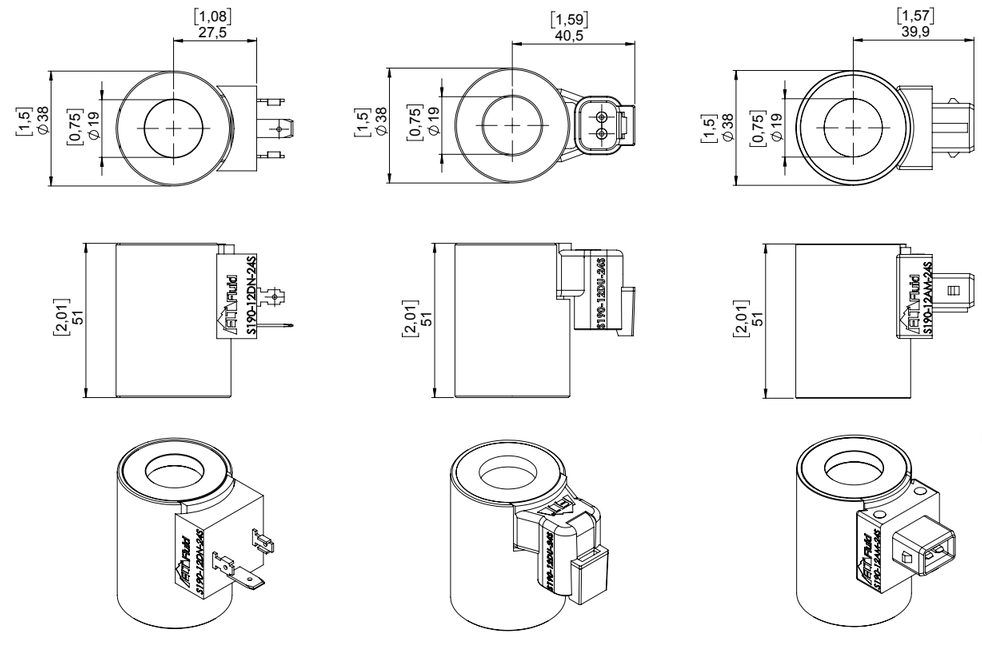

Electric symbol

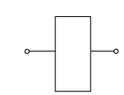

Ordering code	Connector	Voltage +/- 10%	Power at 20 °C	Resistance +/- 10% at 20 °C	ED*	Insulation class	Wire Insulation class	Protection class with connector installed
S190-12DN-24S	DIN 43650	12 Vdc	24 W	6,8 Ω	100% with ambient temperature -20 °C +40 °C	H	H	IP 65
S190-24DN-24S	DIN 43650	24 Vdc	24 W	24 Ω	100% with ambient temperature -20 °C +40 °C	H	H	IP 65
S190-12DU-24S	DEUTSCH DT-02	12 Vdc	24 W	6,8 Ω	100% with ambient temperature -20 °C +40 °C	H	H	IP 67
S190-24DU-24S	DEUTSCH DT-02	24 Vdc	24 W	24 Ω	100% with ambient temperature -20 °C +40 °C	H	H	IP 67
S190-12AM-24S	AMP JUNIOR	12 Vdc	24 W	6,8 Ω	100% with ambient temperature -20 °C +40 °C	H	H	IP 67
S190-24AM-24S	AMP JUNIOR	24 Vdc	24 W	24 Ω	100% with ambient temperature -20 °C +40 °C	H	H	IP 67

***Note:** For temperature or special conditions contact our technical department.

S190-26S Proportional Coil

Drawing

Inches
Millimeters

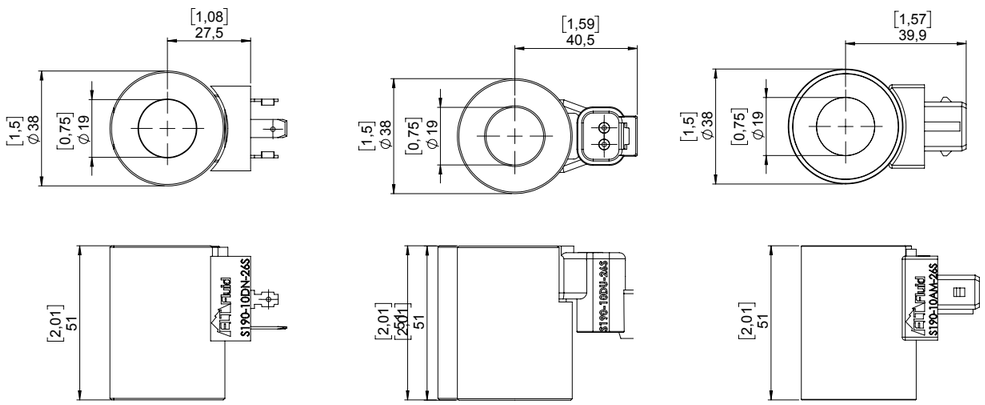

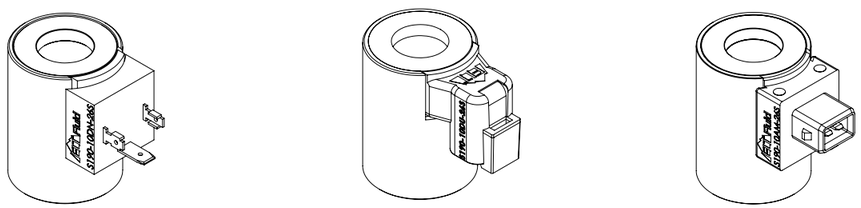

Electric symbol

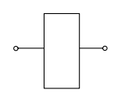

Ordering code	Connector	Voltage +/- 10%	Max. current	Resistance +/- 10% at 20 °C	ED* at max. current indicated	Insulation class	Wire Insulation class	Protection class with connector installed
S190-10DN-26S	DIN 43650	12 Vdc	1800 mA	4 Ω	100% with ambient temperature -20 °C +40 °C	H	H	IP 65
S190-20DN-26S	DIN 43650	24 Vdc	900 mA	14,5 Ω	100% with ambient temperature -20 °C +40 °C	H	H	IP 65
S190-10DU-26S	DEUTSCH DT-02	12 Vdc	1800 mA	4 Ω	100% with ambient temperature -20 °C +40 °C	H	H	IP 67
S190-20DU-26S	DEUTSCH DT-02	24 Vdc	900 mA	14,5 Ω	100% with ambient temperature -20 °C +40 °C	H	H	IP 67
S190-10AM-26S	AMP JUNIOR	12 Vdc	1800 mA	4 Ω	100% with ambient temperature -20 °C +40 °C	H	H	IP 67
S190-20AM-26S	AMP JUNIOR	24 Vdc	900 mA	14,5 Ω	100% with ambient temperature -20 °C +40 °C	H	H	IP 67

**Note:* For temperature or special conditions contact our technical department.

S230-28S Proportional Coil

Drawing

Inches
Millimeters

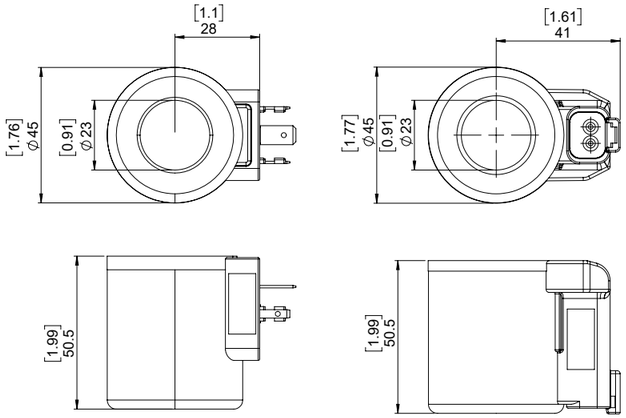

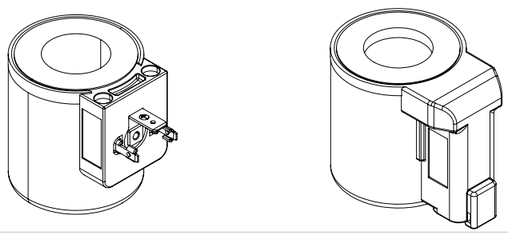

Electric symbol

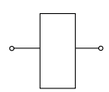

Ordering code	Connector	Voltage +/- 10%	Power at 20 °C	Resistance +/- 10% at 20 °C	ED* at max. current indicated	Insulation class	Wire Insulation class	Protection class with connector installed
S230-12DN-28S	DIN 43650	12 Vdc	28 Watt	5,2 Ω	100% with ambient temperature -20 °C +40 °C	H	H	IP 65
S230-24DN-28S	DIN 43650	24 Vdc	28 Watt	19.,2 Ω	100% with ambient temperature -20 °C +40 °C	H	H	IP 65
S230-12DU-28S	DEUTSCH DT-02	12 Vdc	28 Watt	5,2 Ω	100% with ambient temperature -20 °C +40 °C	H	H	IP 67
S230-24DU-28S	DEUTSCH DT-02	24 Vdc	28 Watt	19.,2 Ω	100% with ambient temperature -20 °C +40 °C	H	H	IP 67

**Note:* For temperature or special conditions contact our technical department.

1. Electric valves On-Off

2. Electro-proportional valves

3. Pressure control valves

4. Flow control valves

5. Directional control valves

6. Load control valves

7. Special solutions

8. Coils

9. Standard bodies

10. Cavity

S. Service (Emergency manual override, general conditions, technical specifications)

Body SAE 06/2 standard

Inches
Millimeters

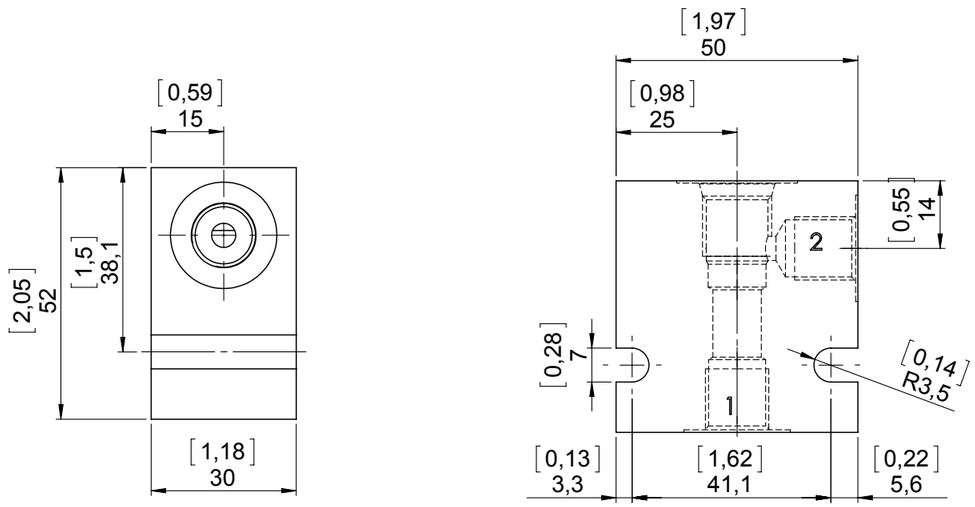

Ordering code	*Ports*	*Material*	*Weight Kg (lbs)*
B06S-2L-2B-A	G 1/4" BSPP	Aluminium	0,18 (0,4)
B06S-2L-2B-S	G 1/4" BSPP	Steel	0,50 (1,1)

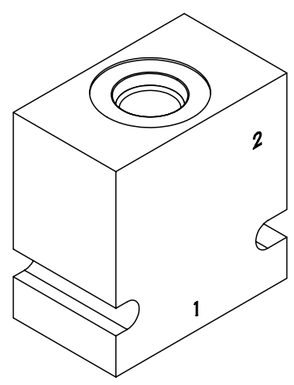

Body SAE 08/2 standard

Inches
Millimeters

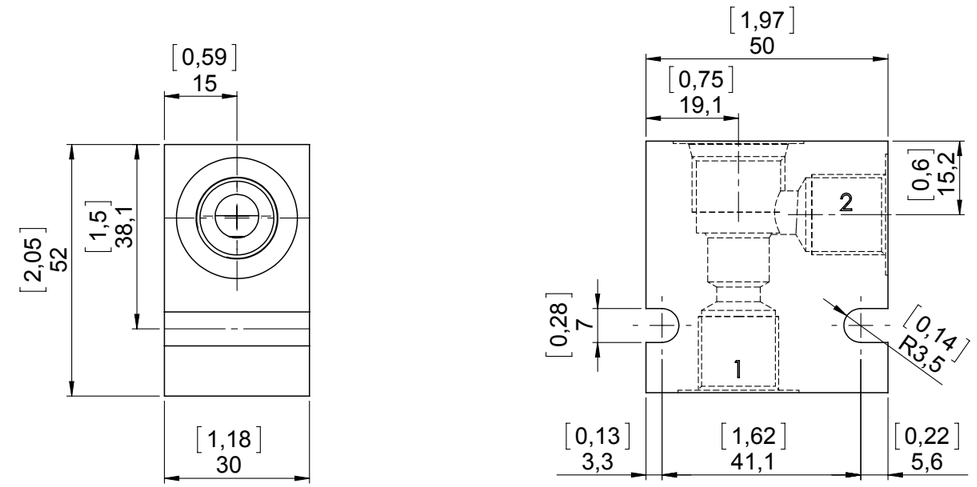

Ordering code	*Ports*	*Material*	*Weight Kg (lbs)*
B08S-2L-2B-A	G 1/4" BSPP	Aluminium	0,18 (0,40)
B08S-2L-2B-S	G 1/4" BSPP	Steel	0,5 (1,11)
B08S-2L-3B-A	G 3/8" BSPP	Aluminium	0,17 (0,38)
B08S-2L-3B-S	G 3/8" BSPP	Steel	0,48 (2,22)

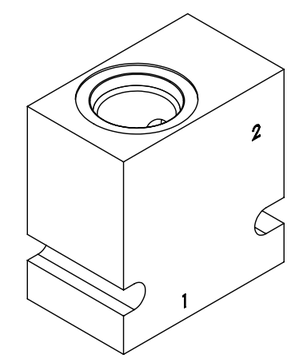

Body SAE 08/3 standard

Inches
Millimeters

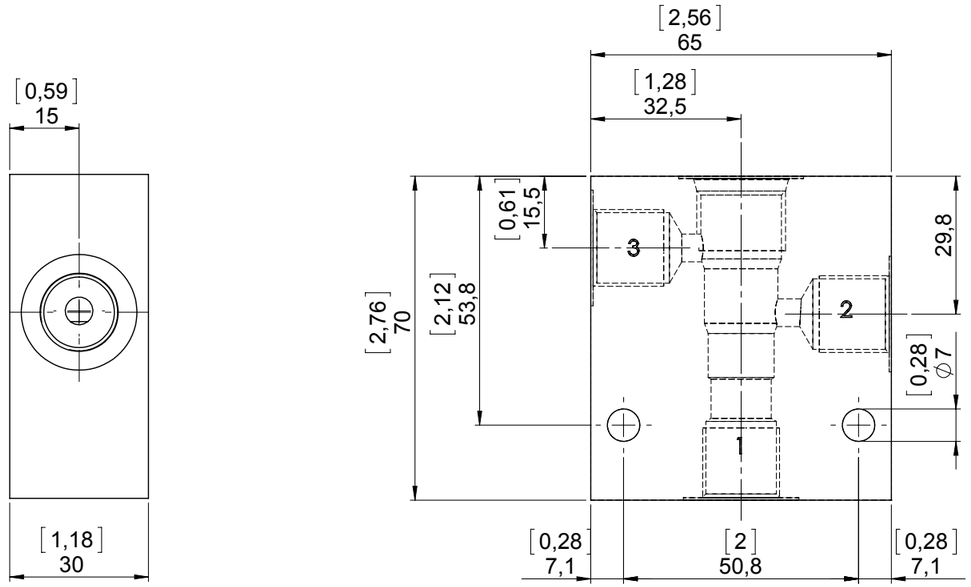

Ordering code	*Ports*	*Material*	*Weight Kg (lbs)*
B08S-3L-2B-A	G 1/4" BSPP	Aluminium	0,32 (0,71)
B08S-3L-2B-S	G 1/4" BSPP	Steel	0,89 (1,96)
B08S-3L-3B-A	G 3/8" BSPP	Aluminium	0,30 (0,66)
B08S-3L-3B-S	G 3/8" BSPP	Steel	0,84 (1,85)

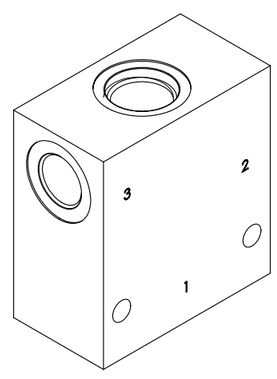

Body SAE 08/3 short

Inches
Millimeters

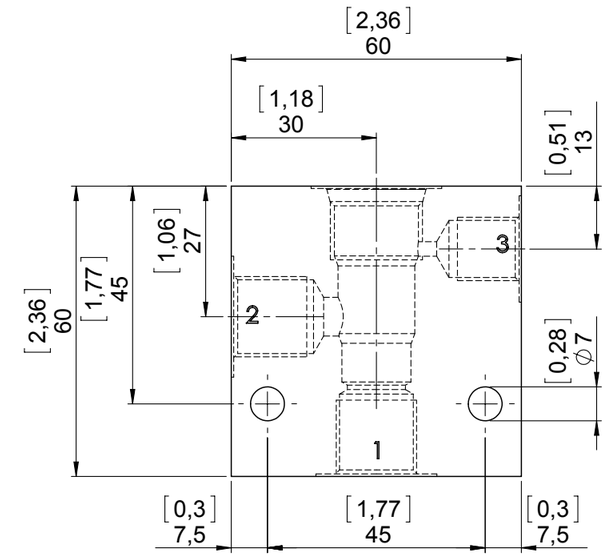

Ordering code	*Ports 1-2*	*Port 3*	*Material*	*Weight Kg (lbs)*
B08S-3C-3B-A	G 3/8" BSPP	G 1/4" BSPP	Aluminium	0,25 (0,55)
B08S-3C-3B-S	G 3/8" BSPP	G 1/4" BSPP	Steel	0,69 (1,52)

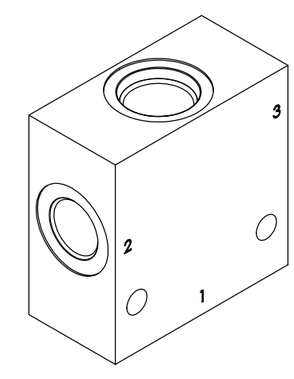

Body SAE 08/3 short double

Inches
Millimeters

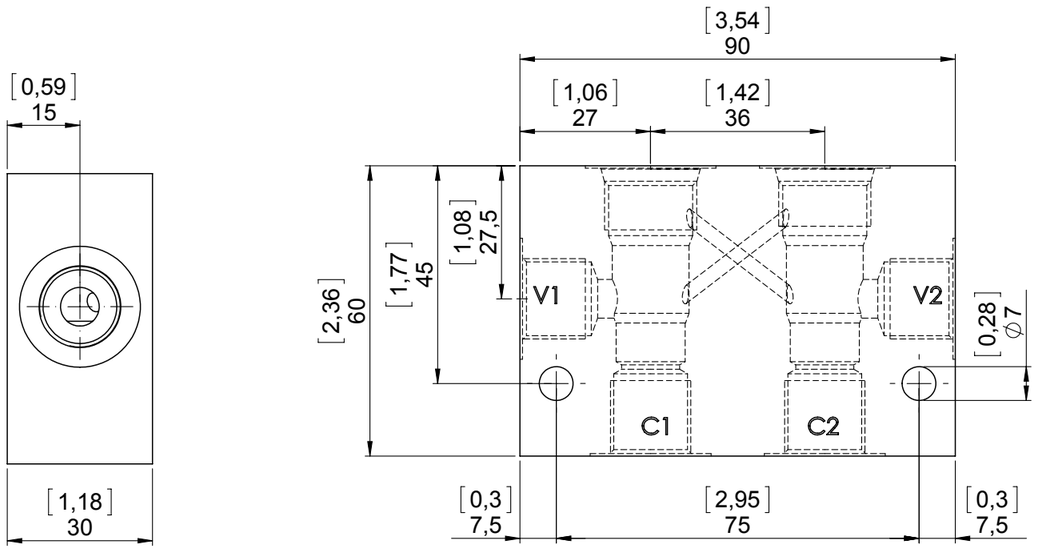

Ordering code	Ports	Material	Weight Kg (lbs)
B08D-3C-3B-A	G 3/8" BSPP	Aluminium	0,36 (0,79)
B08D-3C-3B-S	G 3/8" BSPP	Steel	1 (2,21)

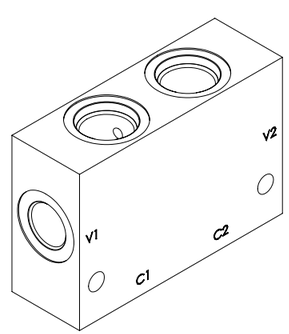

Body SAE 08/4 standard

Inches
Millimeters

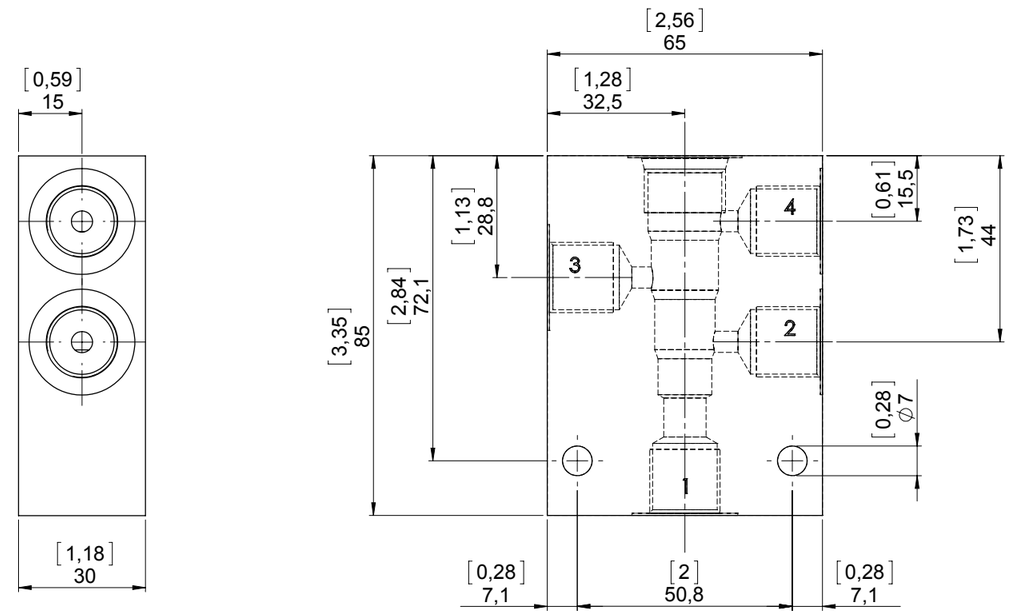

Ordering code	Ports	Material	Weight Kg (lbs)
B08S-4L-2B-A	G 1/4" BSPP	Aluminium	0,39 (0,86)
B08S-4L-2B-S	G 1/4" BSPP	Steel	1,1 (2,43)
B08S-4L-3B-A	G 3/8" BSPP	Aluminium	0,37 (0,82)
B08S-4L-3B-S	G 3/8" BSPP	Steel	1 (2,2)

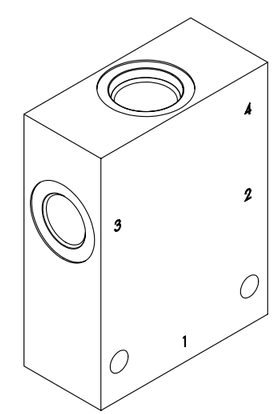

Body SAE 08/5

Inches
Millimeters

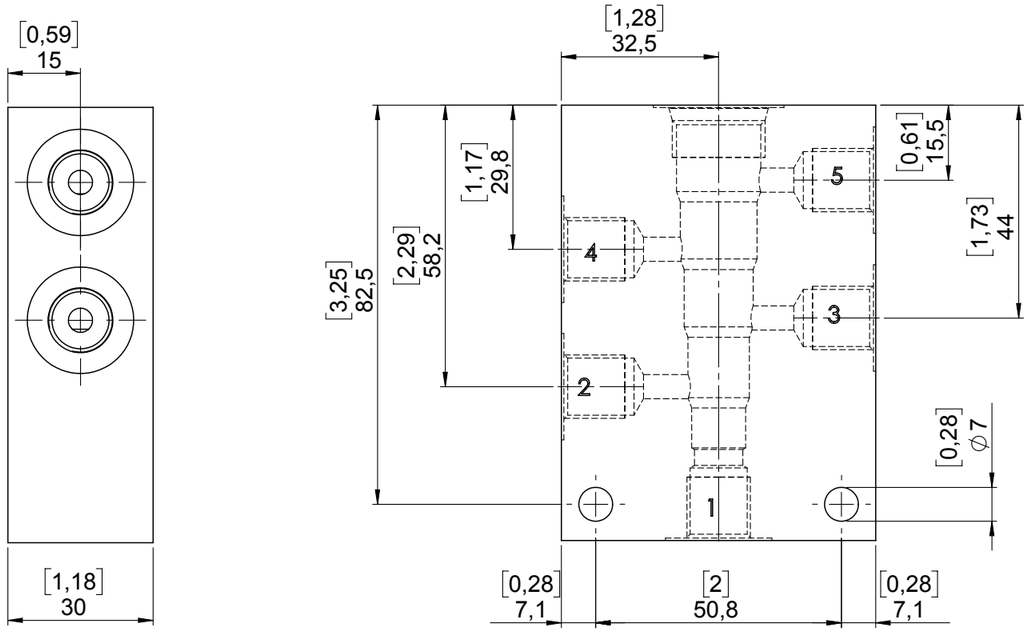

Ordering code	Ports	Material	Weight Kg (lbs)
B08S-5L-2B-A	G 1/4" BSPP	Aluminium	0,39 (0,86)
B08S-5L-2B-S	G 1/4" BSPP	Steel	1,1 (2,43)
B08S-5L-3B-A	G 3/8" BSPP	Aluminium	0,37 (0,82)
B08S-5L-3B-S	G 3/8" BSPP	Steel	1 (2,2)

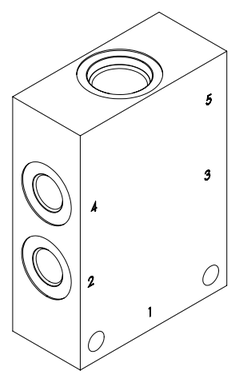

Body SAE 10/2 standard

Inches
Millimeters

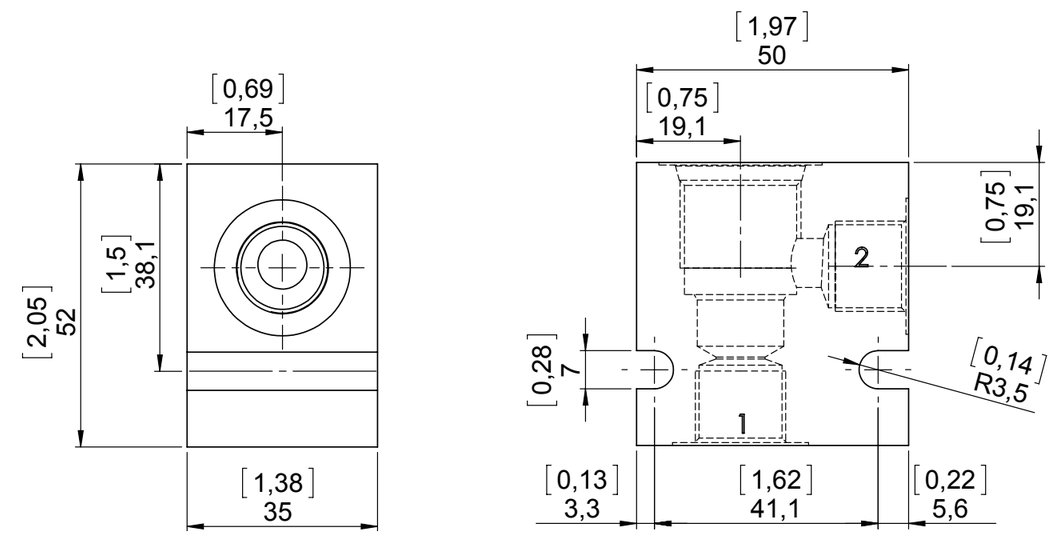

Ordering code	Ports	Material	Weight Kg (lbs)
B10S-2L-3B-A	G 3/8" BSPP	Aluminium	0,19 (0,42)
B10S-2L-3B-S	G 3/8" BSPP	Steel	0,56 (1,24)
B10S-2L-4B-A	G 1/2" BSPP	Aluminium	0,18 (0,40)
B10S-2L-4B-S	G 1/2" BSPP	Steel	0,52 (1,15)

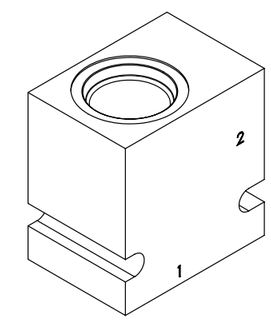

Body SAE 10/3 standard

Inches
Millimeters

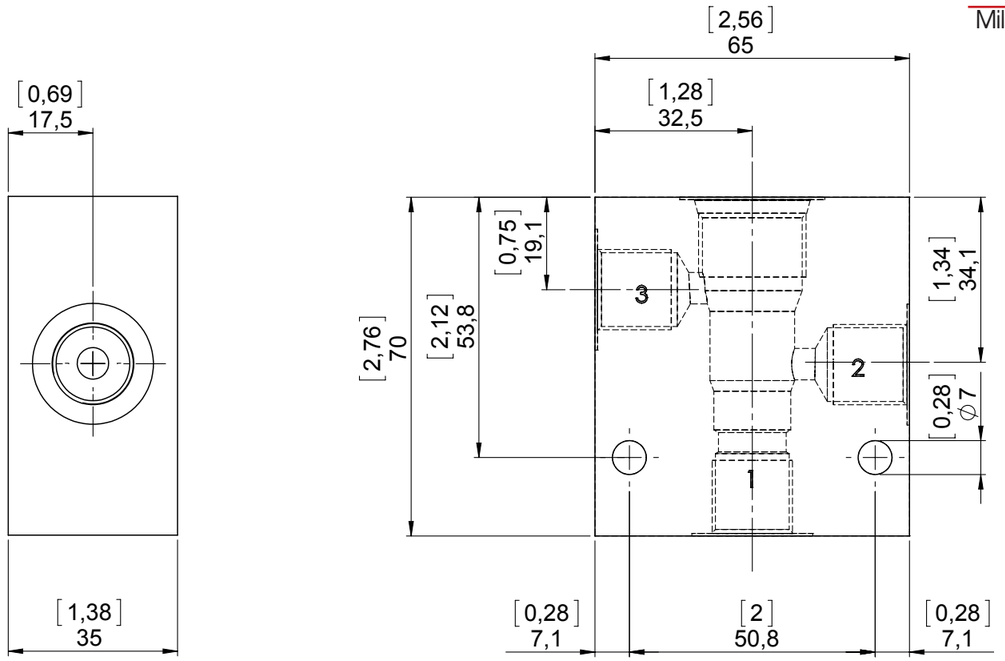

Ordering code	Ports	Material	Weight Kg (lbs)
B10S-3L-3B-A	G 3/8" BSPP	Aluminium	0,36 (0,79)
B10S-3L-3B-S	G 3/8" BSPP	Steel	1 (2,2)
B10S-3L-4B-A	G 1/2" BSPP	Aluminium	0,34 (0,75)
B10S-3L-4B-S	G 1/2" BSPP	Steel	0,95 (2,09)

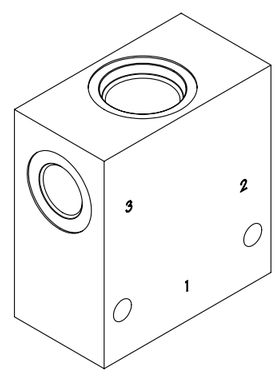

Body SAE 10/3 short

Inches
Millimeters

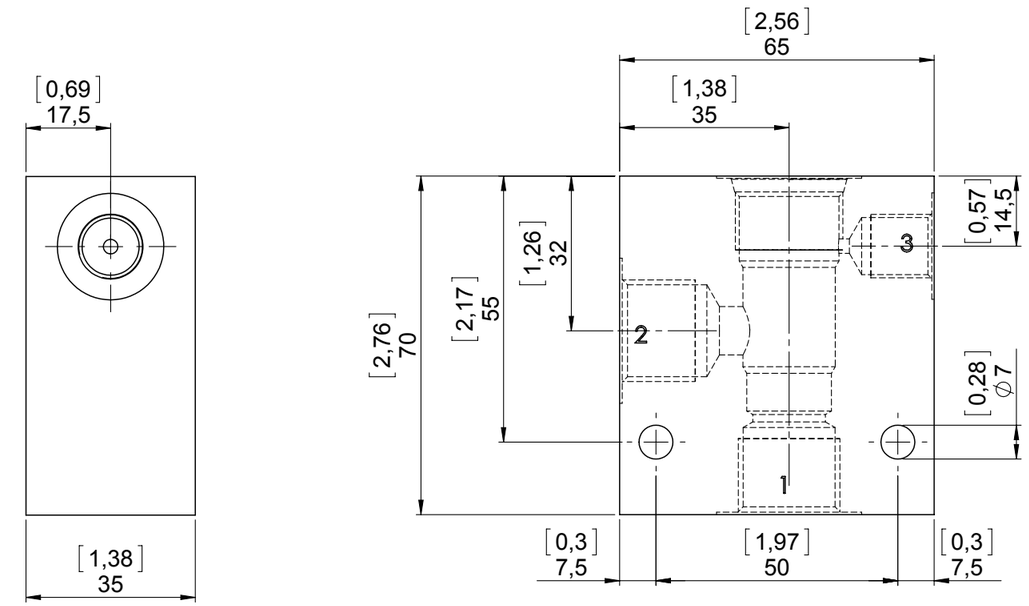

Ordering code	Ports 1-2	Port 3	Material	Weight Kg (lbs)
B10S-3C-3B-A	G 3/8" BSPP	G 1/4" BSPP	Aluminium	0,35 (0,77)
B10S-3C-3B-S	G 3/8" BSPP	G 1/4" BSPP	Steel	1,05 (2,31)
B10S-3C-4B-A	G 1/2" BSPP	G 1/4" BSPP	Aluminium	0,34 (0,75)
B10S-3C-4B-S	G 1/2" BSPP	G 1/4" BSPP	Steel	0,97 (2,17)

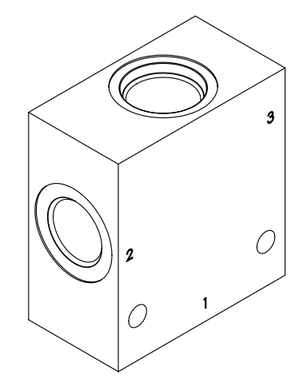

Body SAE 10/3 short double

Inches
Millimeters

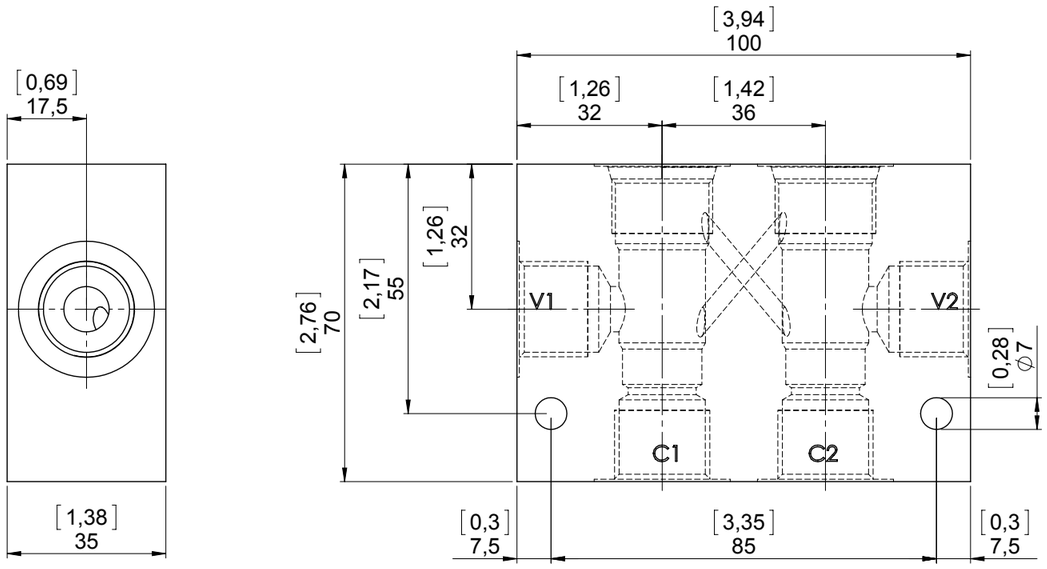

Ordering code	*Ports*	*Material*	*Weight Kg (lbs)*
B10D-3C-3B-A	G 3/8" BSPP	Aluminium	0,53 (1,17)
B10D-3C-3B-S	G 3/8" BSPP	Steel	1,52 (3,35)
B10D-3C-4B-A	G 1/2" BSPP	Aluminium	0,5 (1,1)
B10D-3C-4B-S	G 1/2" BSPP	Steel	1,46 (3,22)

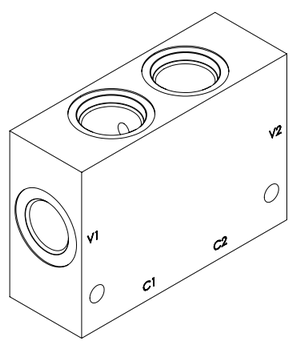

Body SAE 10/4 standard

Inches
Millimeters

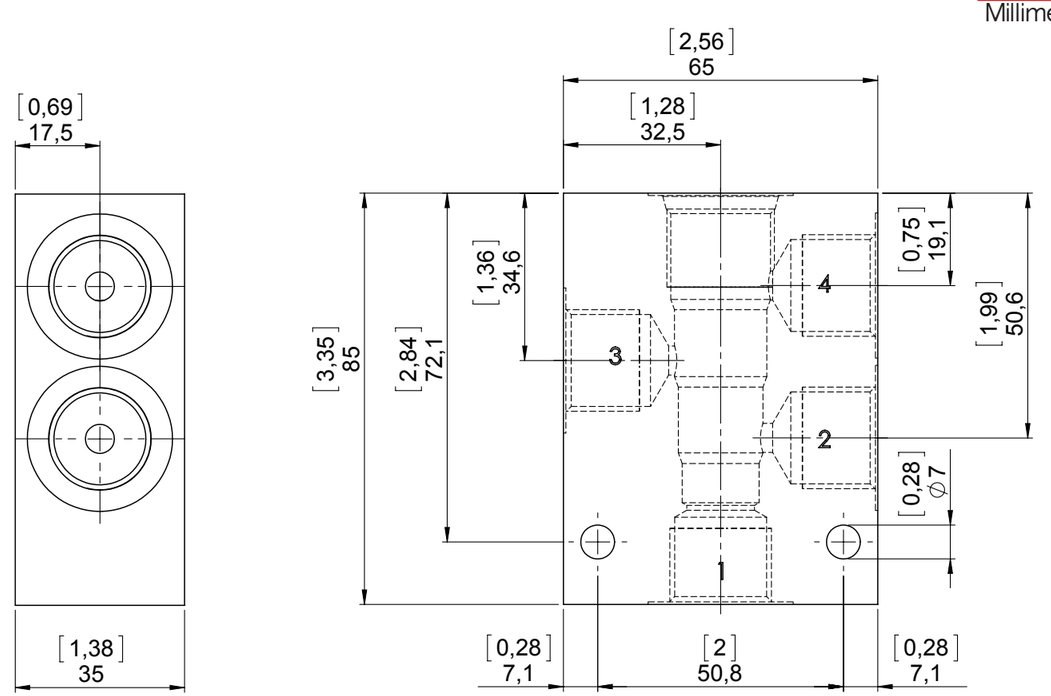

Ordering code	*Ports*	*Material*	*Weight Kg (lbs)*
B10S-4L-3B-A	G 3/8" BSPP	Aluminium	0,43 (0,95)
B10S-4L-3B-S	G 3/8" BSPP	Steel	1,23 (2,71)
B10S-4L-4B-A	G 1/2" BSPP	Aluminium	0,4 (0,88)
B10S-4L-4B-S	G 1/2" BSPP	Steel	1,16 (2,56)

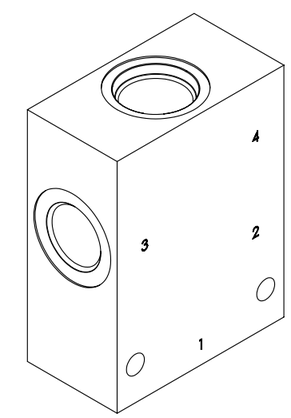

Body SAE 12/2 standard

Inches
Millimeters

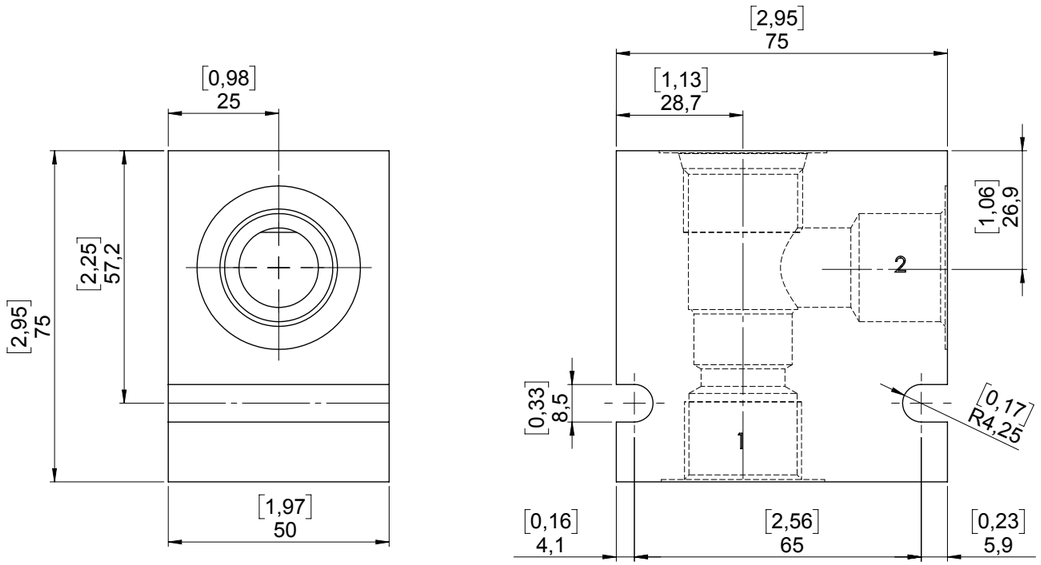

Ordering code	*Ports*	*Material*	*Weight Kg (lbs)*
B12S-2L-4B-A	G 1/2" BSPP	Aluminium	0,49 (1,08)
B12S-2L-4B-S	G 1/2" BSPP	Steel	1,42 (3,15)
B12S-2L-5B-A	G 3/4" BSPP	Aluminium	0,46 (1,02)
B12S-2L-5B-S	G 3/4" BSPP	Steel	1,33 (2,95)

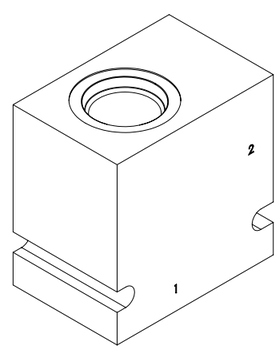

Body SAE 12/3 standard

Inches
Millimeters

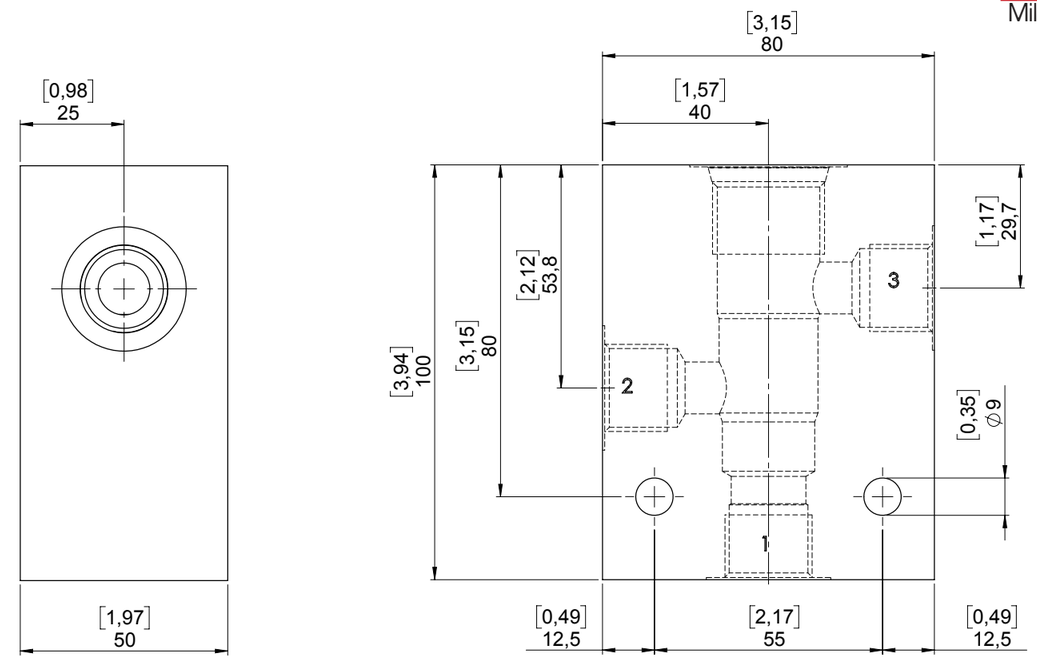

Ordering code	*Ports*	*Material*	*Weight Kg (lbs)*
B12S-3L-4B-A	G 1/2" BSPP	Aluminium	0,91 (2)
B12S-3L-4B-S	G 1/2" BSPP	Steel	2,6 (5,7)
B12S-3L-5B-A	G 3/4" BSPP	Aluminium	0,87 (1,91)
B12S-3L-5B-S	G 3/4" BSPP	Steel	2,50 (5,51)

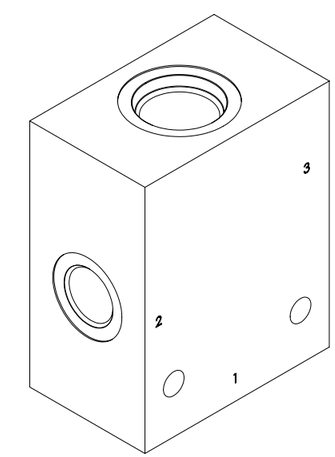

Body SAE 12/3 short

Inches
Millimeters

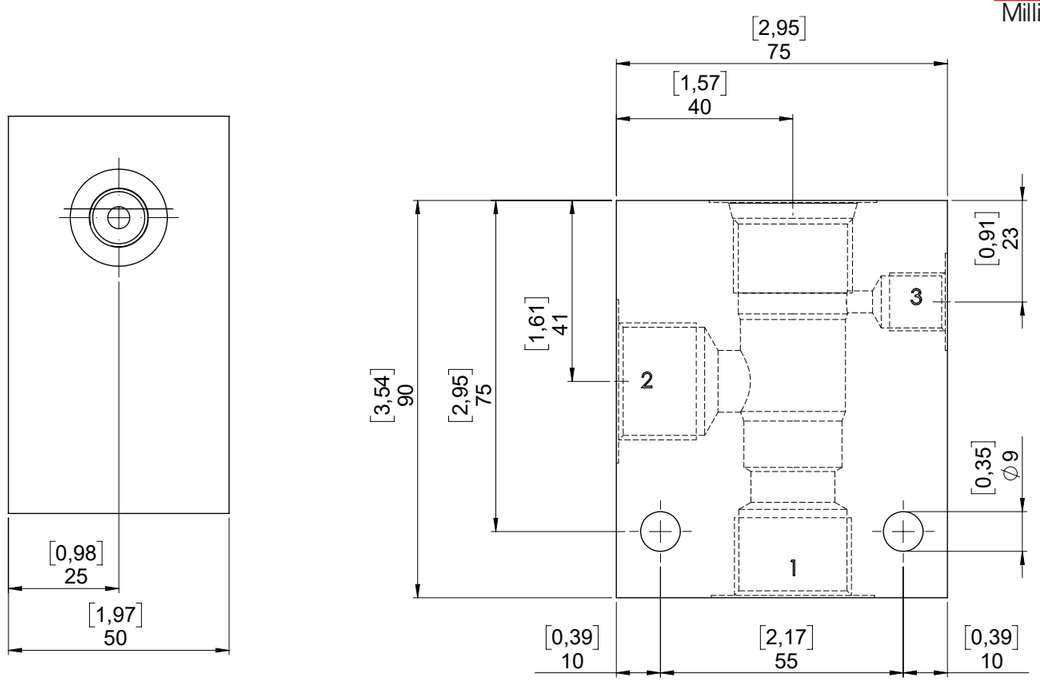

Ordering code	Ports	Material	Weight Kg (lbs)
B12S-3C-4B-A	G 1/2" BSPP	Aluminium	0,91 (2)
B12S-3C-4B-S	G 1/2" BSPP	Steel	2,6 (5,7)
B12S-3C-5B-A	G 3/4" BSPP	Aluminium	0,87 (1,91)
B12S-3C-5B-S	G 3/4" BSPP	Steel	2,50 (5,51)

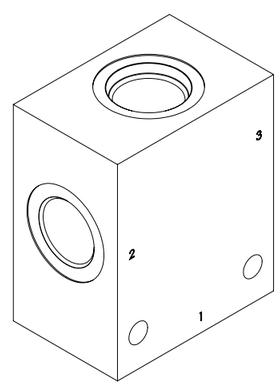

Body SAE 12/4 standard

Inches
Millimeters

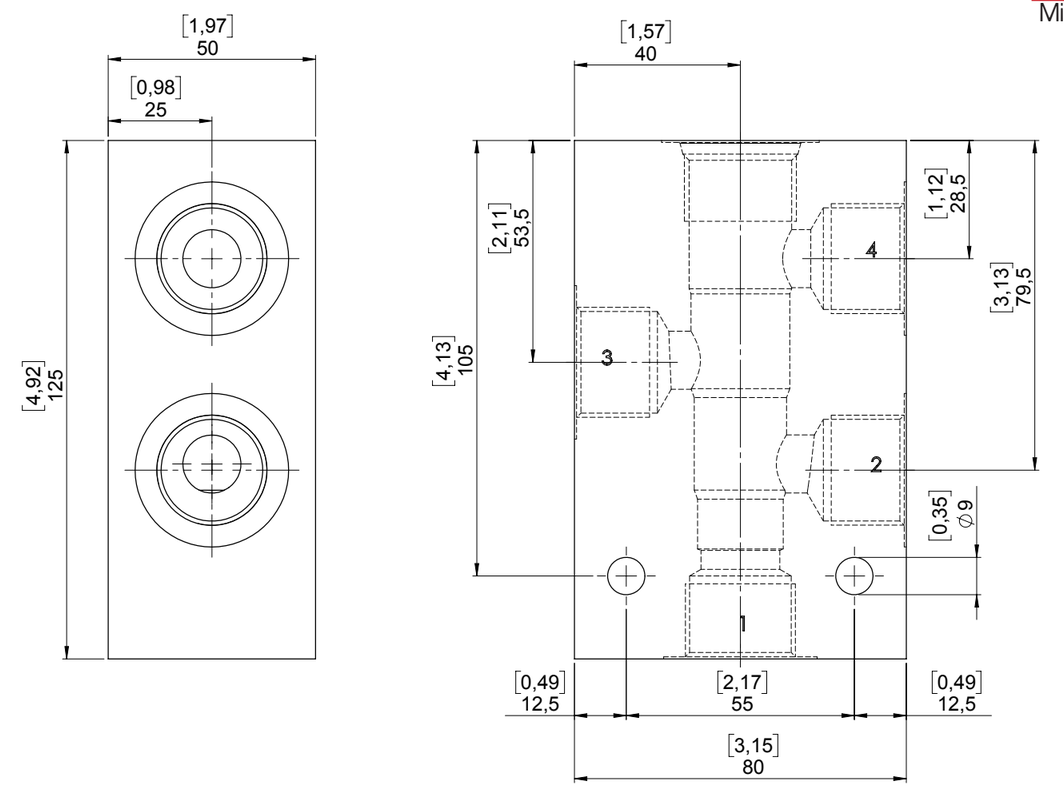

Ordering code	Ports	Material	Weight Kg (lbs)
B12S-4L-5B-A	G 3/4" BSPP	Aluminium	1 (2,2)
B12S-4L-5B-S	G 3/4" BSPP	Steel	3,15 (6,95)

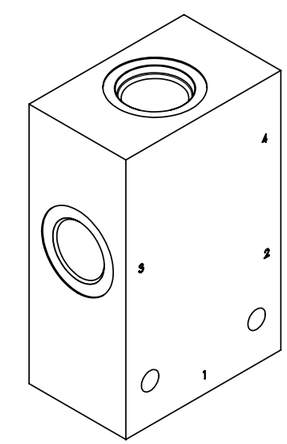

Body SAE 16/2 standard

Inches
Millimeters

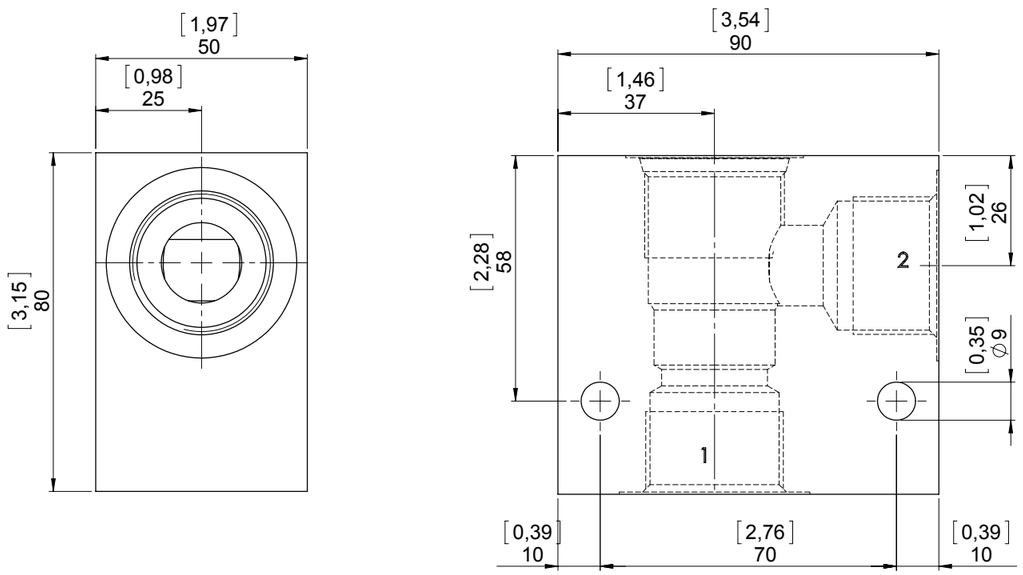

Ordering code	*Ports*	*Material*	*Weight Kg (lbs)*
B16S-2L-6B-A	G 1" BSPP	Aluminium	0,75 (1,65)
B16S-2L-6B-S	G 1" BSPP	Steel	2,11 (4,65)

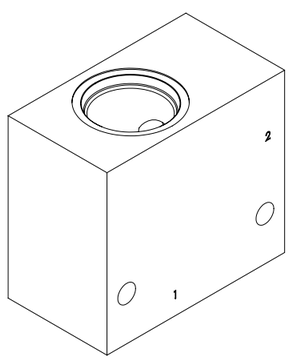

Body SAE 16/3 short

Inches
Millimeters

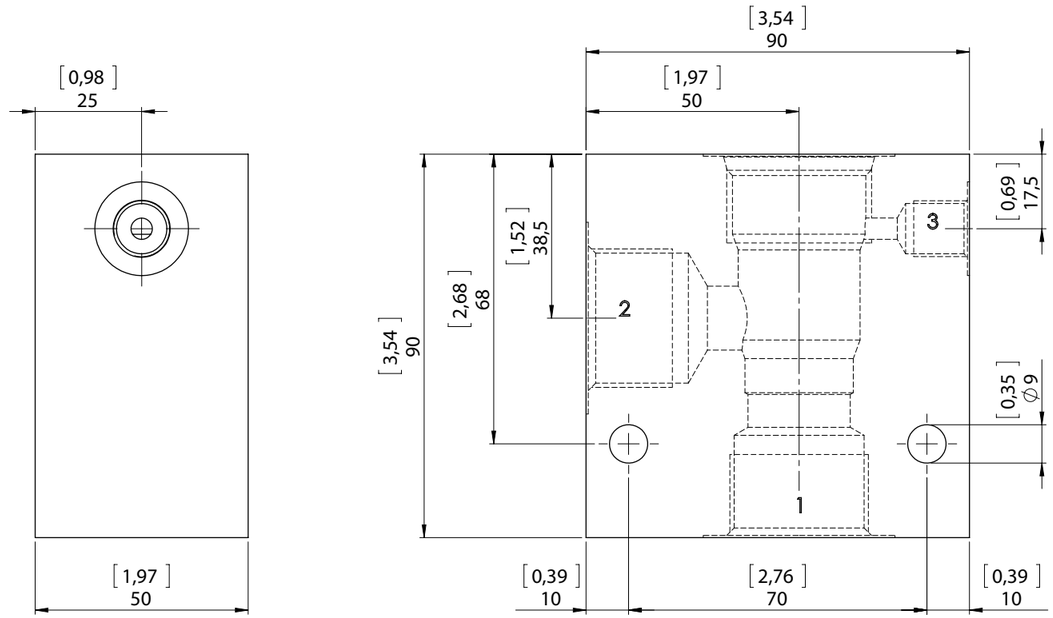

Ordering code	*Ports 1-2*	*Port 3*	*Material*	*Weight Kg (lbs)*
B16S-3C-6B-A	G 1" BSPP	G 1/4" BSPP	Aluminium	0,85 (1,87)
B16S-3C-6B-S	G 1" BSPP	G 1/4" BSPP	Steel	2,5 (5,51)

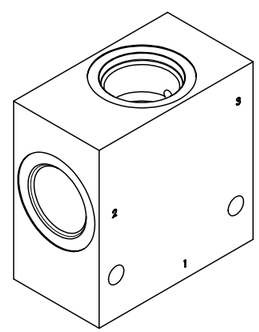

Body SAE 16/4 standard

Inches
Millimeters

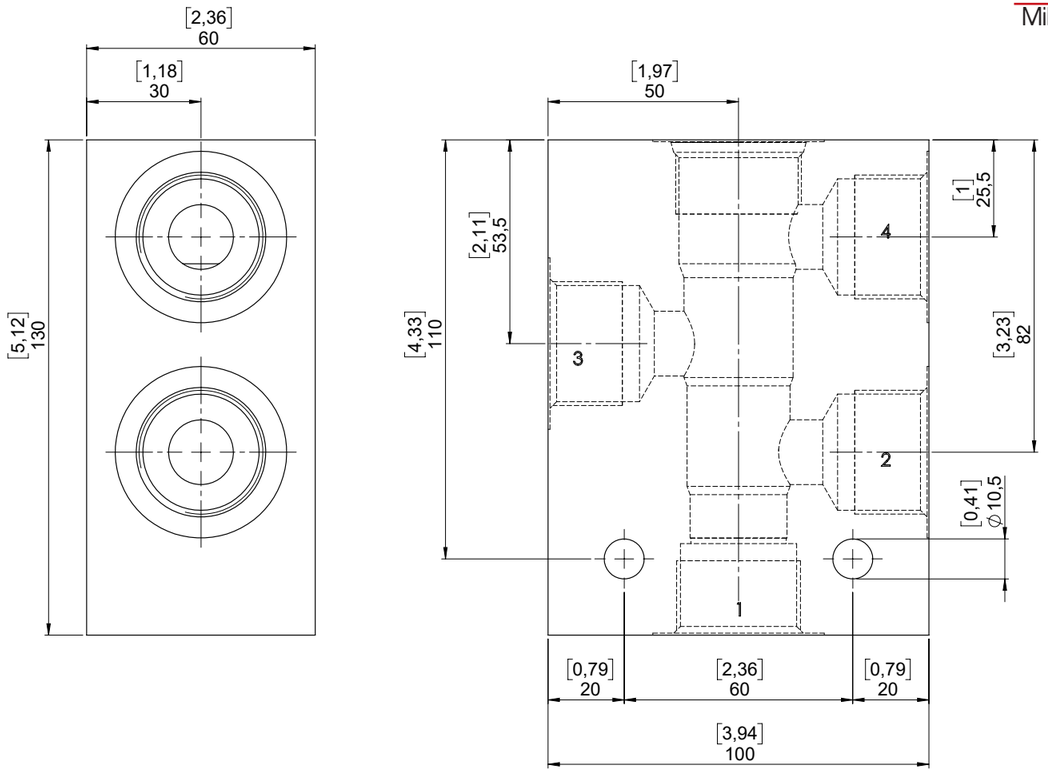

Ordering code	Ports 1-2	Port 3	Material	WeightKg (lbs)
B16S-4L-6B-A	G 1" BSPP	G 1/4" BSPP	Aluminium	0,85 (1,87)
B16S-4L-6B-S	G 1" BSPP	G 1/4" BSPP	Steel	2,5 (5,51)

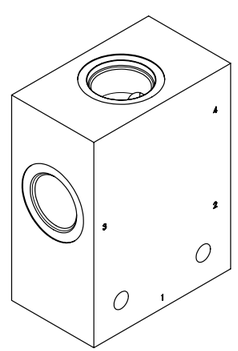

Body SAE 20/2 standard

Inches
Millimeters

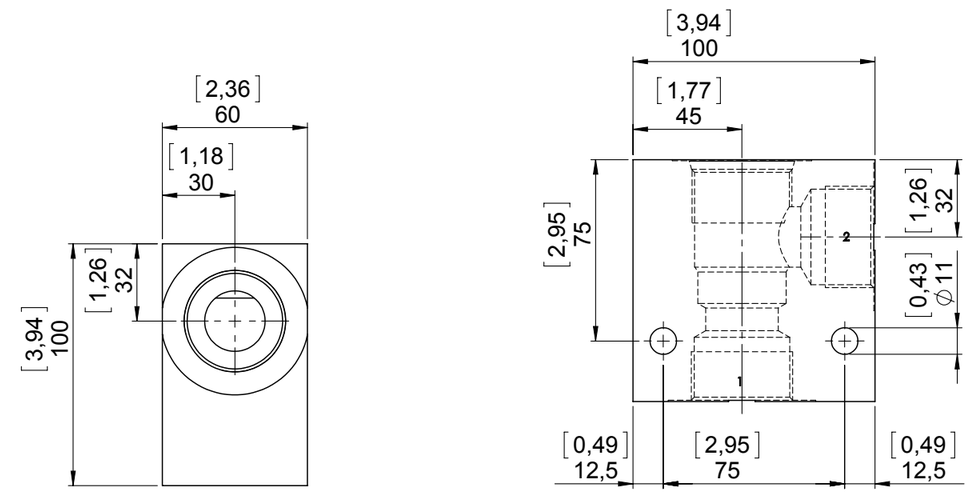

Ordering code	Ports	Material	Weight Kg (lbs)
B20S-2L-7B-A	G 1-1/4" BSPP	Aluminium	1,21 (2,67)
B20S-2L-7B-S	G 1-1/4" BSPP	Steel	3,4 (7,49)

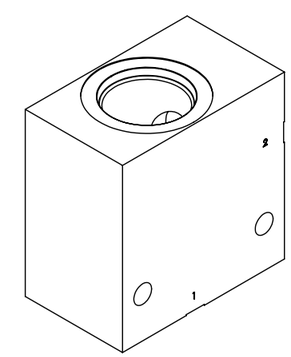

Body G 3/4” standard

Inches
Millimeters

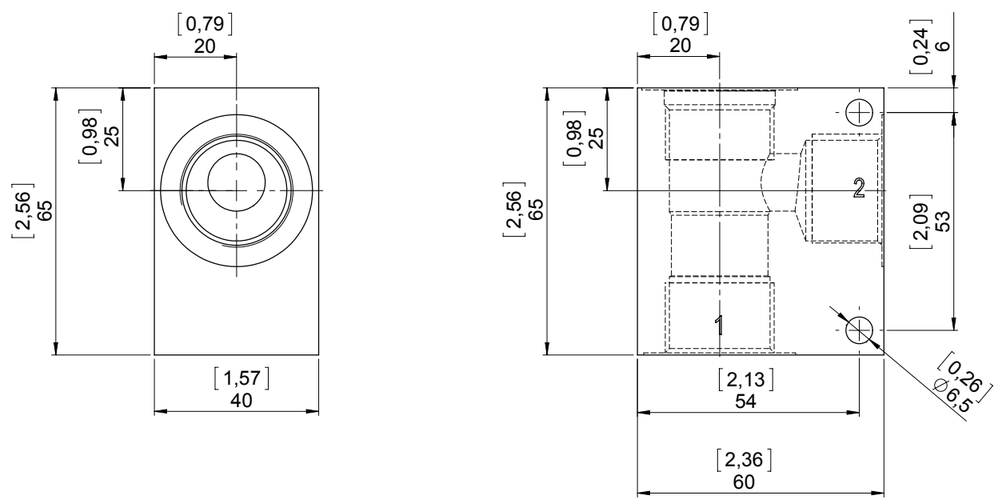

Ordering code	*Ports*	*Material*	*Weight Kg (lbs)*
B11S-2L-4B-A	G 1/2” BSPP	Aluminium	0,33 (0,73)
B11S-2L-4B-S	G 1/2” BSPP	Steel	0,94 (2,08)
B11S-2L-5B-A	G 3/4” BSPP	Aluminium	0,3 (0,67)
B11S-2L-5B-S	G 3/4” BSPP	Steel	0,88 (1,96)

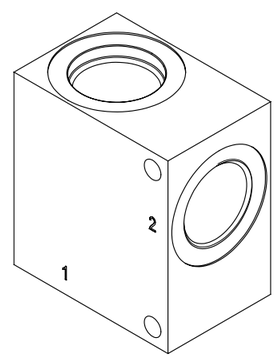

Body G 1” standard

Inches
Millimeters

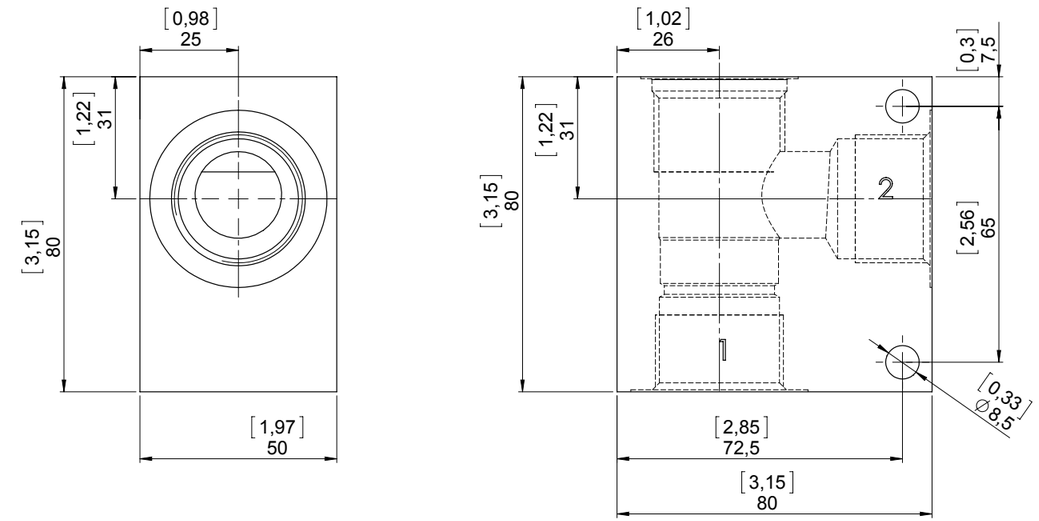

Ordering code	*Ports*	*Material*	*Weight Kg (lbs)*
B13S-2L-5B-A	G 3/4” BSPP	Aluminium	0,67 (1,49)
B13S-2L-5B-S	G 3/4” BSPP	Steel	1,96 (4,36)
B13S-2L-6B-A	G 1” BSPP	Aluminium	0,63 (1,4)
B13S-2L-6B-S	G 1” BSPP	Steel	1,8 (4)

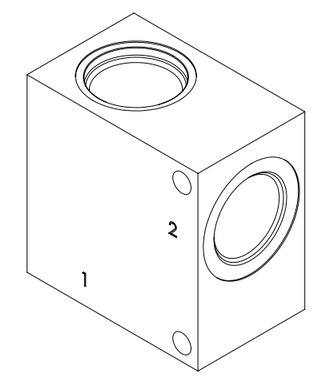

1. Electric valves On-Off

2. Electro-proportional valves

3. Pressure control valves

4. Flow control valves

5. Directional control valves

6. Load control valves

7. Special solutions

8.
9.
10. Coils Standard bodies Cavity

S. Service (Emergency manual override, general conditions, technical specifications)

SCN0620 Cavity SAE 06/2 standard

Inches
Millimeters

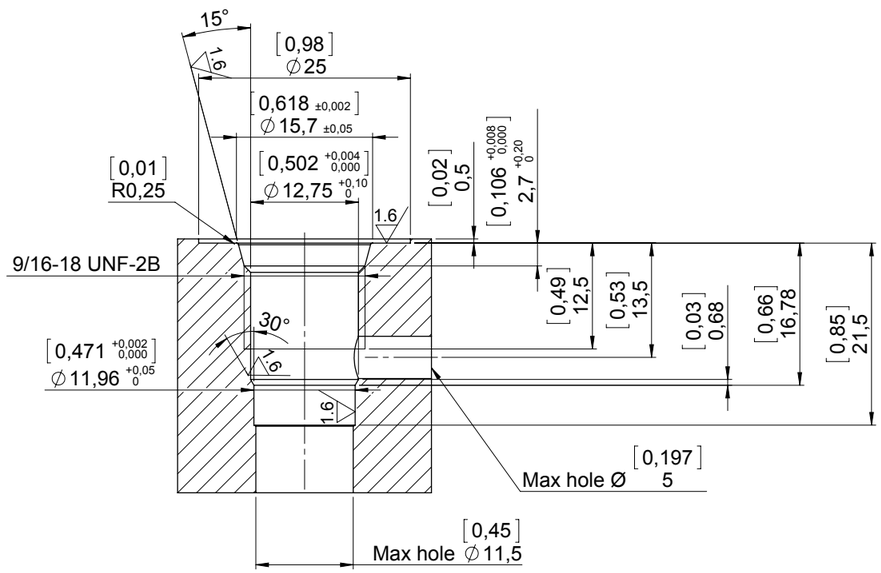

General tolerance: +/- [0,01] 0,2

Geometric tolerance Inches	
◎	0.001
⊥	0.001

Geometric tolerance Millimeters	
◎	0.025
⊥	0.025

SCN0820 Cavity SAE 08/2 standard

Inches
Millimeters

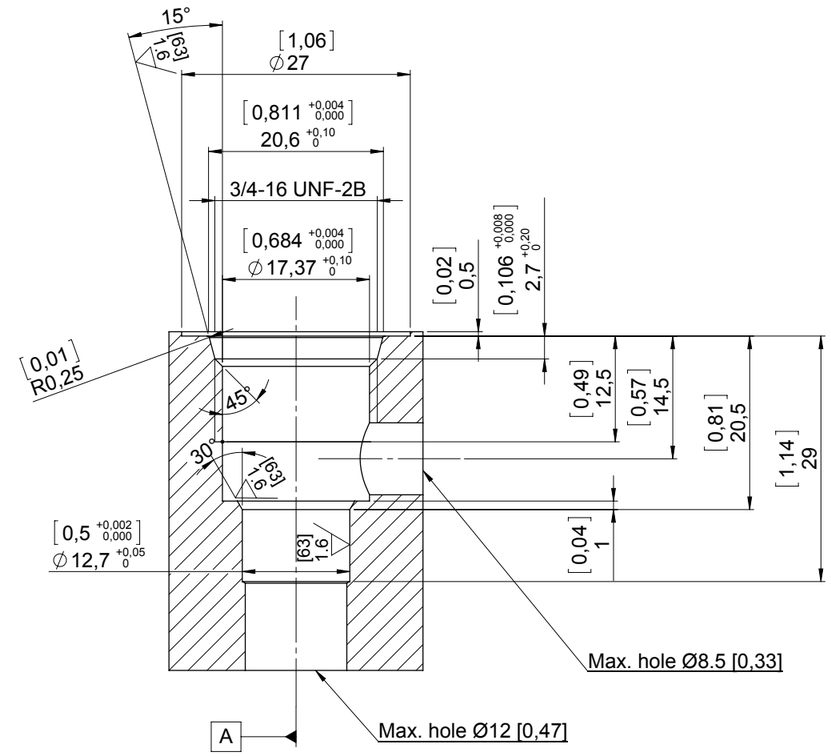

General tolerance: +/- [0,01] 0,2

Geometric tolerance Inches	
◎	0.001
⊥	0.001

Geometric tolerance Millimeters	
◎	0.025
⊥	0.025

SCN0830 Cavity SAE 08/3 standard

Inches
Millimeters

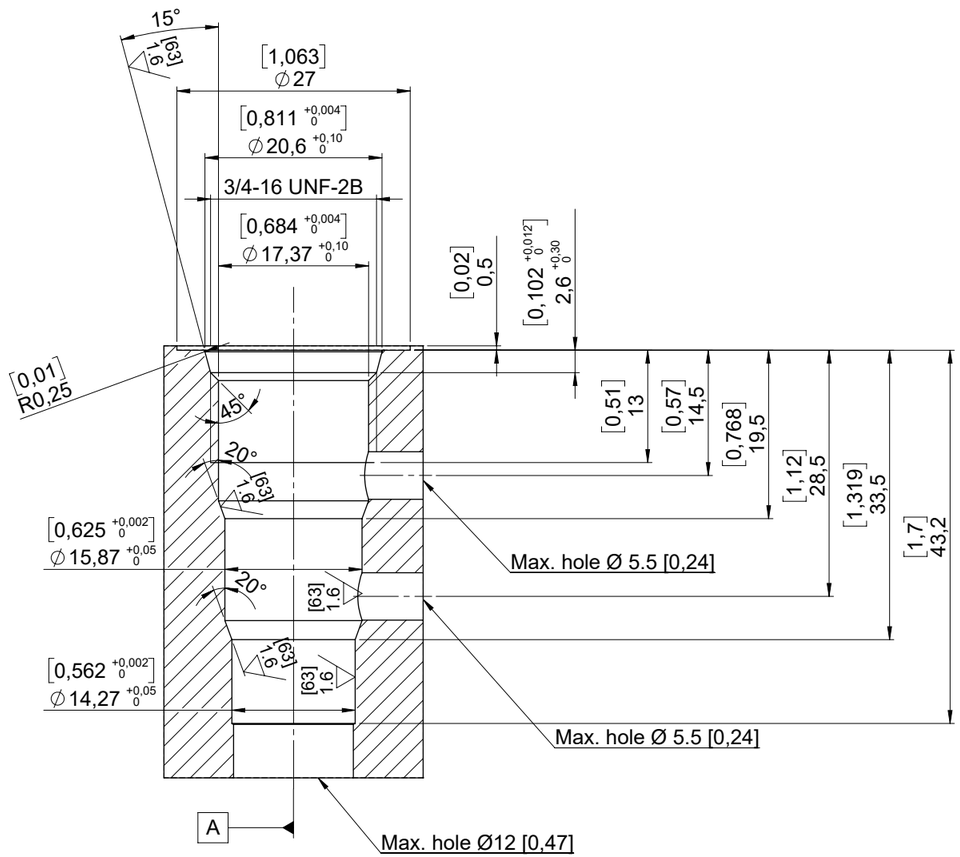

General tolerance: +/- [0,008] 0,2

Geometric tolerance Inches

◎	0.001
⊥	0.001

Geometric tolerance Millimeters

◎	0.025
⊥	0.025

SCS0830 Cavity SAE 8/3 short

Inches
Millimeters

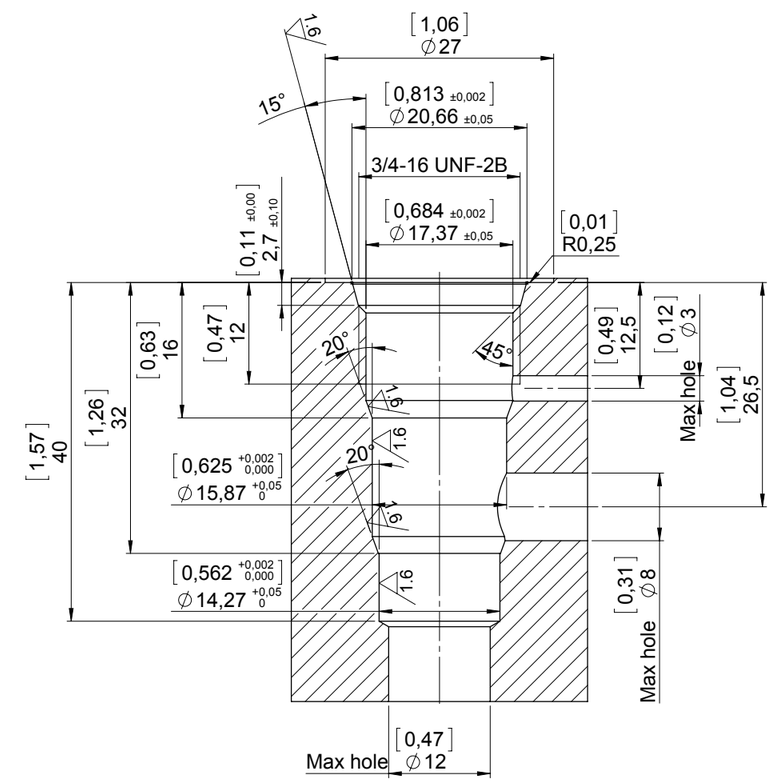

General tolerance: +/- [0,01] 0,2

Geometric tolerance Inches

◎	0.001
⊥	0.001

Geometric tolerance Millimeters

◎	0.025
⊥	0.025

SCN0840 Cavity SAE 08/4 standard

Inches
Millimeters

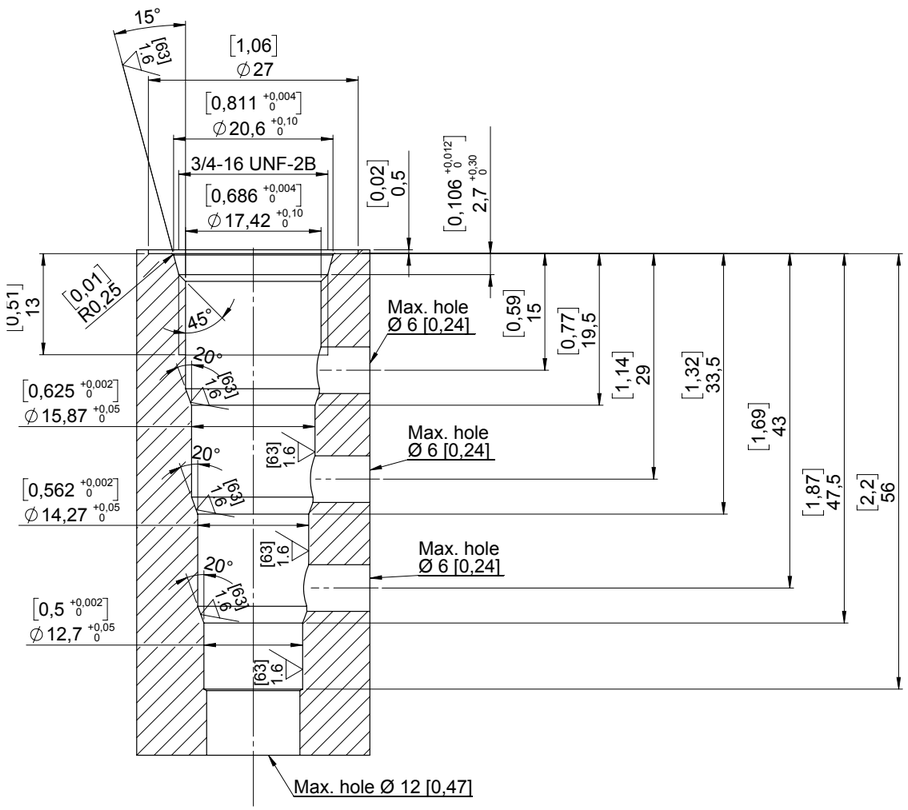

General tolerance: +/- [0,008] 0,2

	Geometric tolerance Inches	Geometric tolerance Millimeters
◎	0.001	0.025
⊥	0.001	0.025

SCN0850 Cavity SAE 8/5 standard

Inches
Millimeters

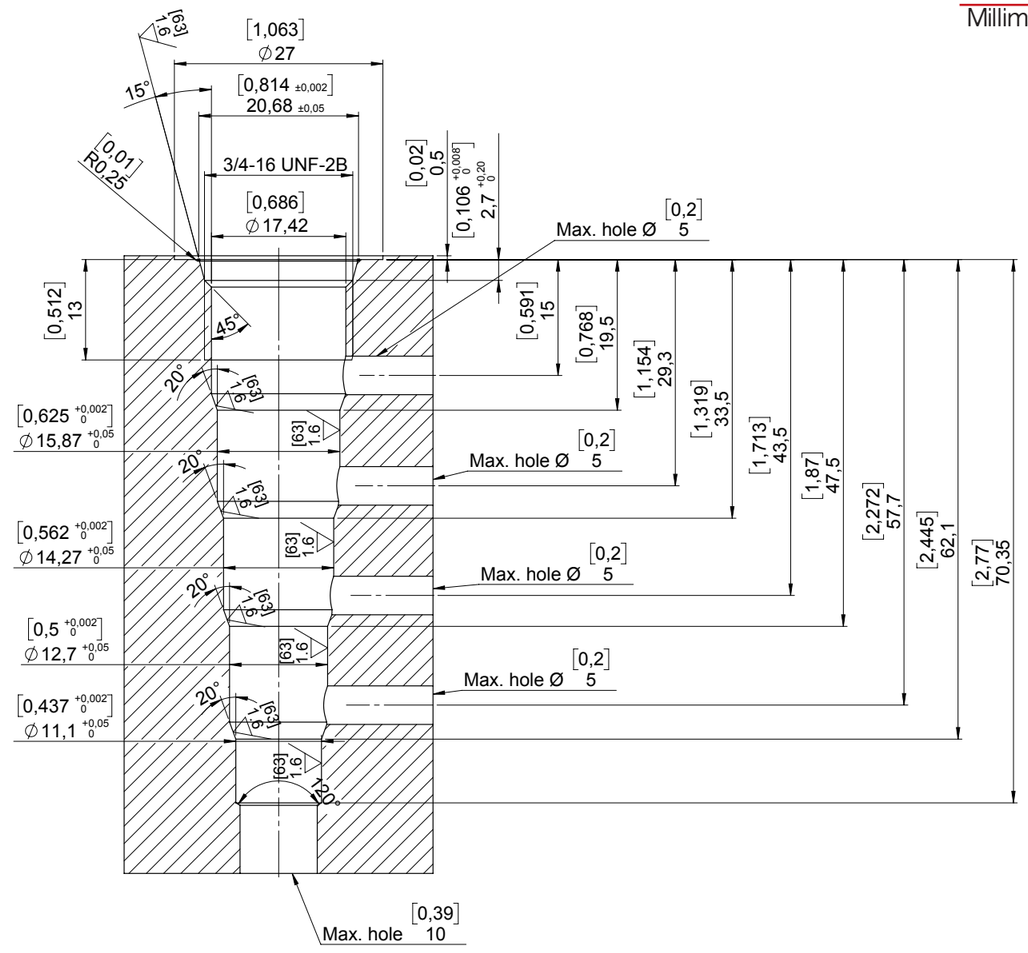

General tolerance: +/- [0,008] 0,2

	Geometric tolerance Inches	Geometric tolerance Millimeters
◎	0.001	0.025
⊥	0.001	0.025

SCN1020 Cavity SAE 10/2 standard

Inches
Millimeters

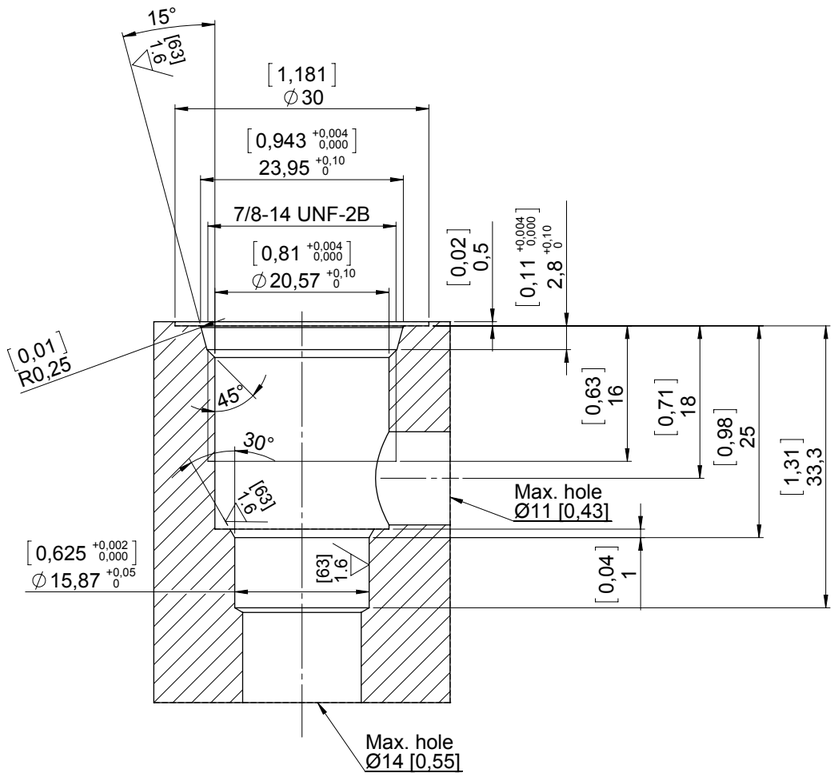

General tolerance: +/- [0,01] 0,2

Geometric tolerance Inches	
◎	0.001
⊥	0.001

Geometric tolerance Millimeters	
◎	0.025
⊥	0.025

SCN1021 Cavity SAE 10/2 special

Inches
Millimeters

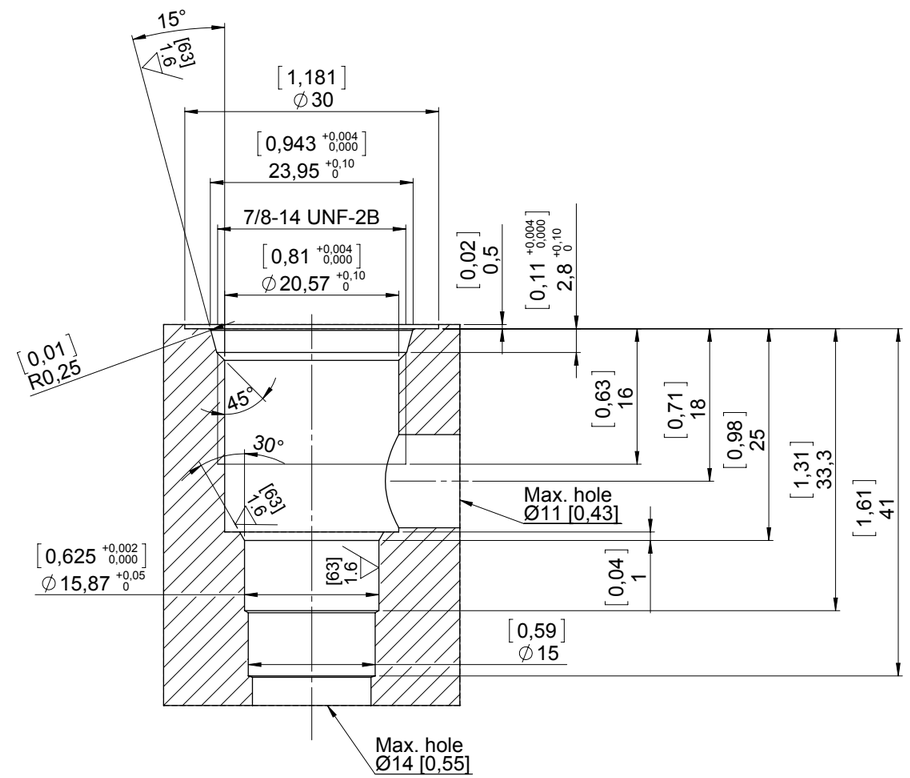

General tolerance: +/- [0,01] 0,2

Geometric tolerance Inches	
◎	0.001
⊥	0.001

Geometric tolerance Millimeters	
◎	0.025
⊥	0.025

SCN1030 Cavity SAE 10/3 standard

Inches
Millimeters

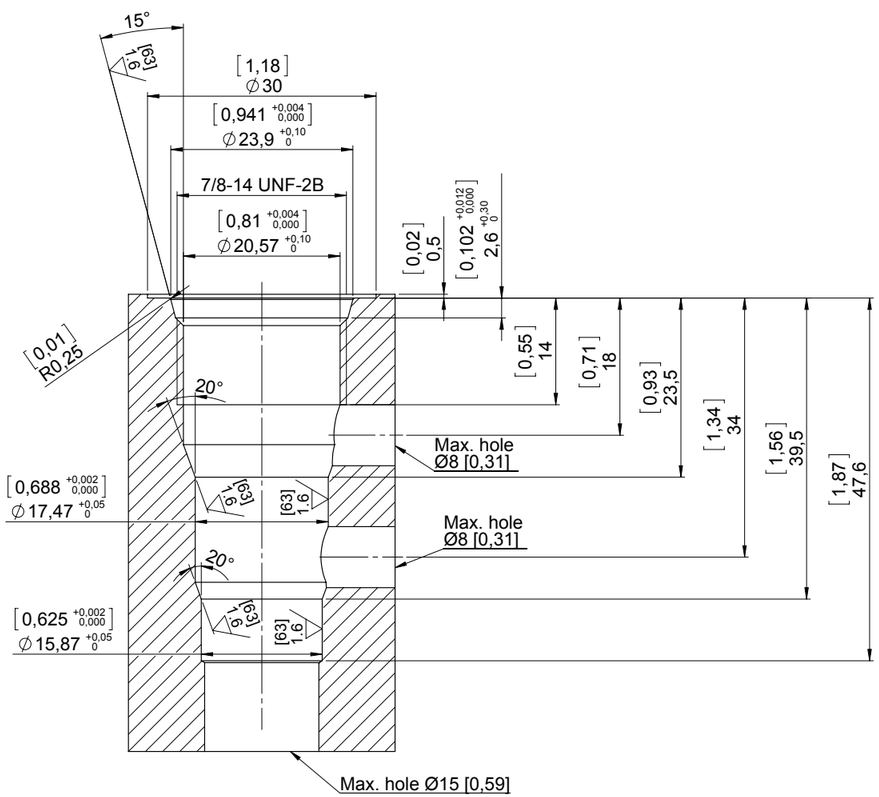

General tolerance: +/- [0,01] 0,2

	Geometric tolerance Inches	Geometric tolerance Millimeters
◎	0.001	0.025
⊥	0.001	0.025

SCS1030 Cavity SAE 10/3 short

Inches
Millimeters

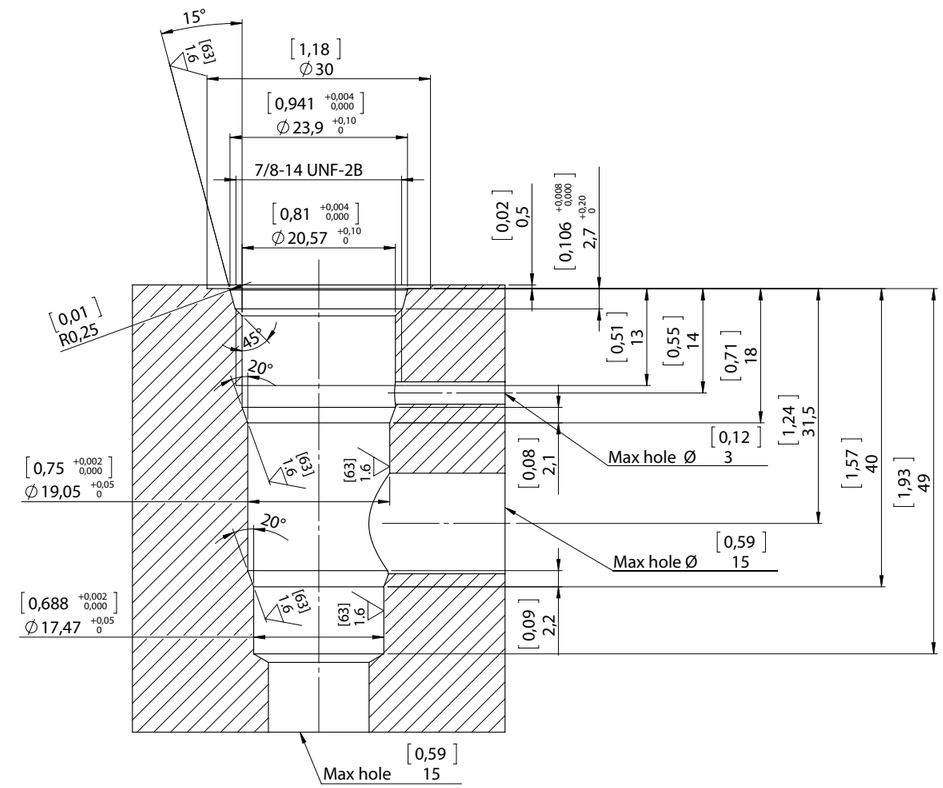

General tolerance: +/- [0,01] 0,2

	Geometric tolerance Inches	Geometric tolerance Millimeters
◎	0.001	0.025
⊥	0.001	0.025

SCN1040 Cavity SAE 10/4 standard

Inches
Millimeters

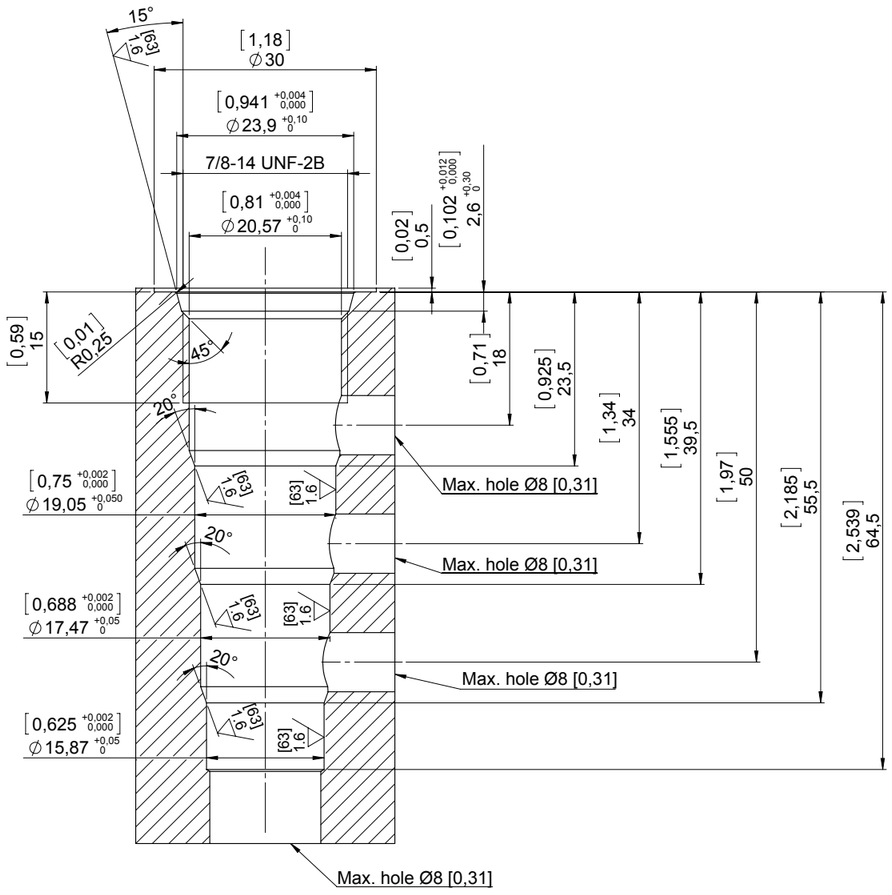

General tolerance: +/- [0,01] 0,2

	Geometric tolerance Inches	Geometric tolerance Millimeters
◎	0.001	0.025
⊥	0.001	0.025

SCN1220 Cavity SAE 12/2 standard

Inches
Millimeters

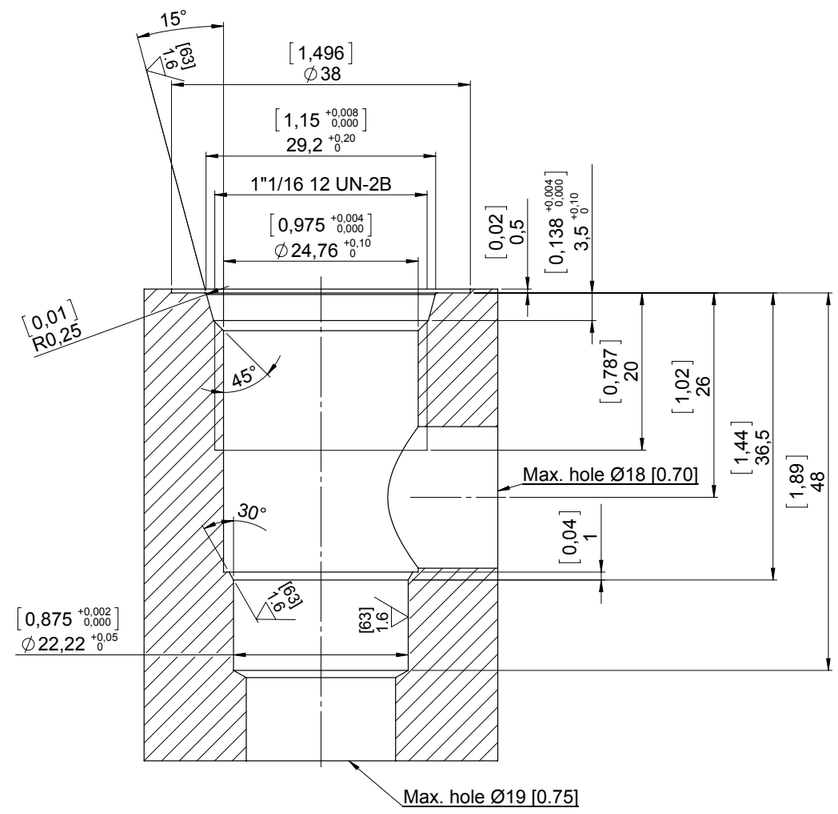

General tolerance: +/- [0,01] 0,2

	Geometric tolerance Inches	Geometric tolerance Millimeters
◎	0.001	0.025
⊥	0.001	0.025

SCN1221 Cavity SAE 12/2 special

Inches
Millimeters

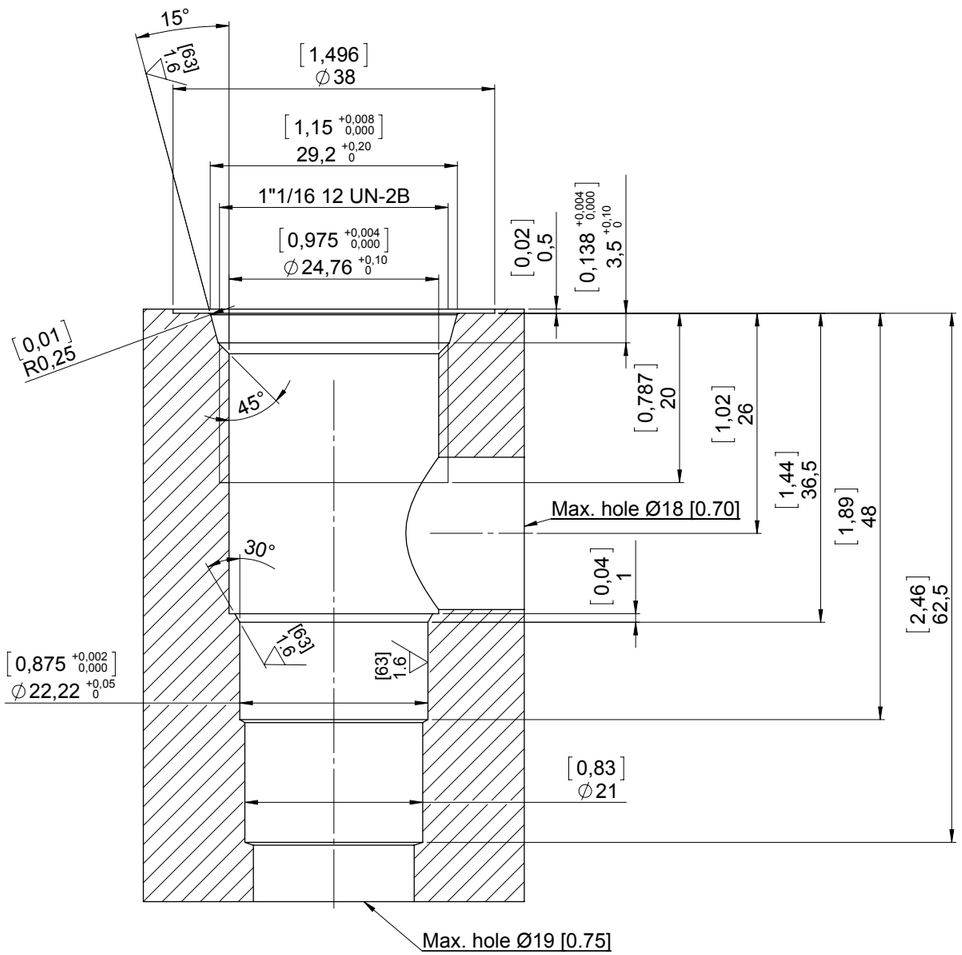

General tolerance: +/- [0,01] 0,2

Geometric tolerance Inches	
◎	0.001
⊥	0.001

Geometric tolerance Millimeters	
◎	0.025
⊥	0.025

SCN1230 Cavity SAE 12/3 standard

Inches
Millimeters

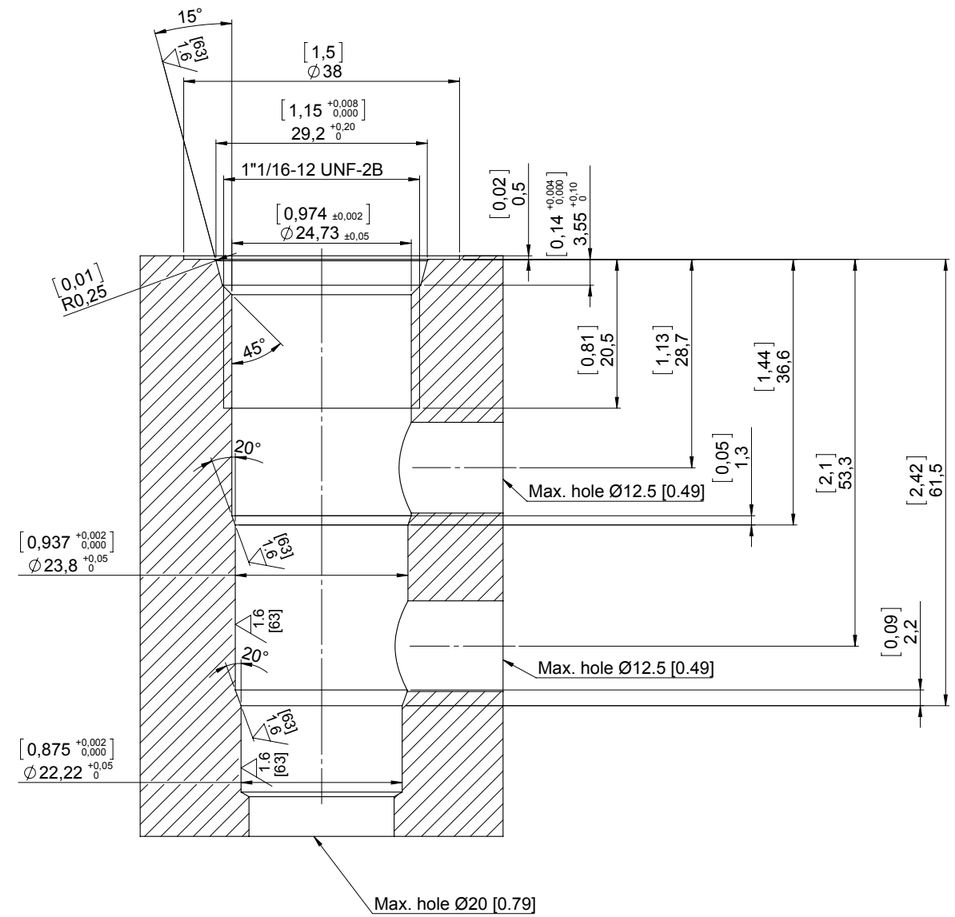

General tolerance: +/- [0,01] 0,2

Geometric tolerance Inches	
◎	0.001
⊥	0.001

Geometric tolerance Millimeters	
◎	0.025
⊥	0.025

SCS1230 Cavity SAE 12/3 short

Inches
Millimeters

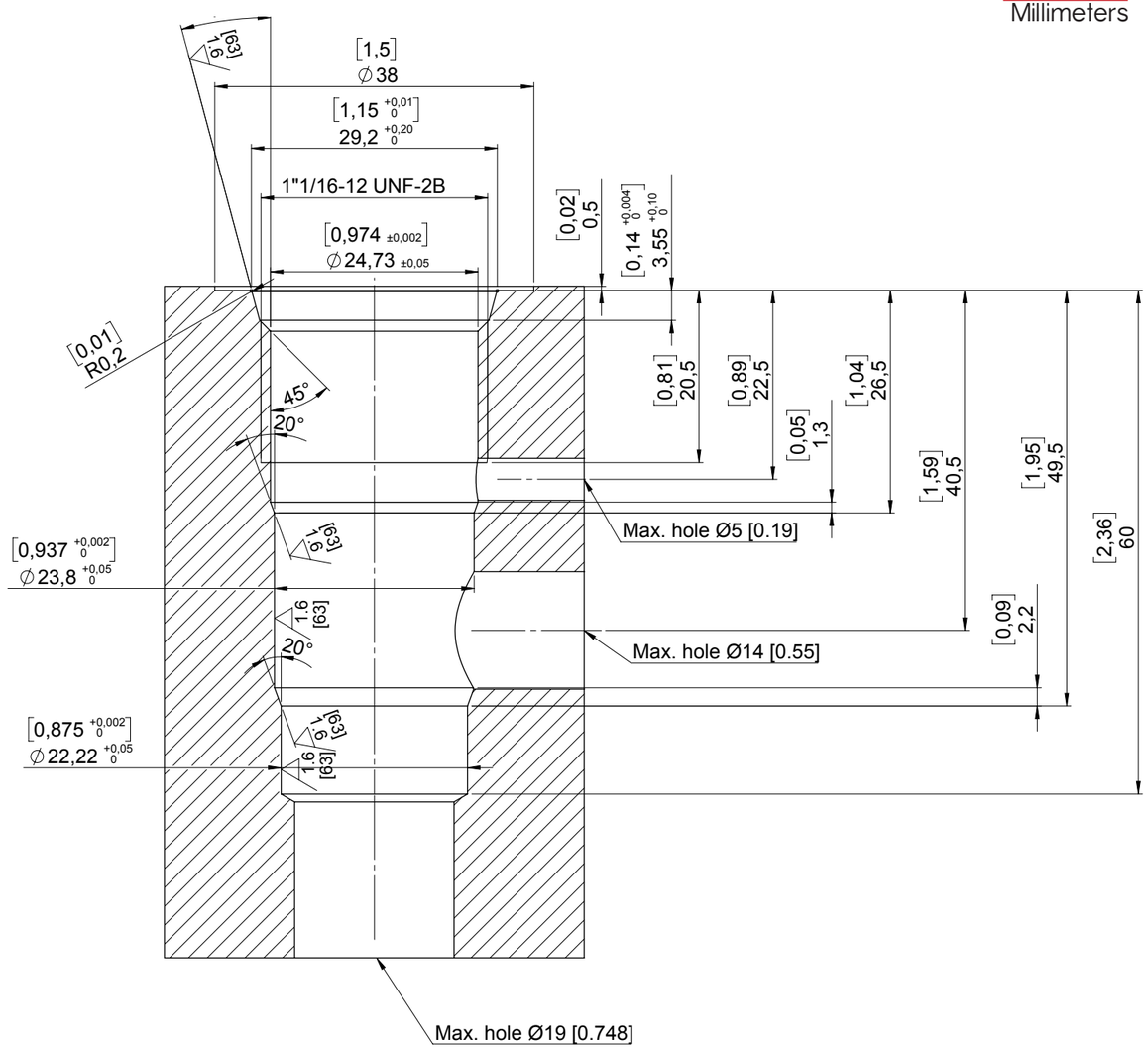

		Geometric tolerance Inches	Geometric tolerance Millimeters
General tolerance: +/-	[0,01] 0,2	◎ 0.001	◎ 0.025
		⊥ 0.001	⊥ 0.025

SCN1240 Cavity SAE 12/4 standard

Inches
Millimeters

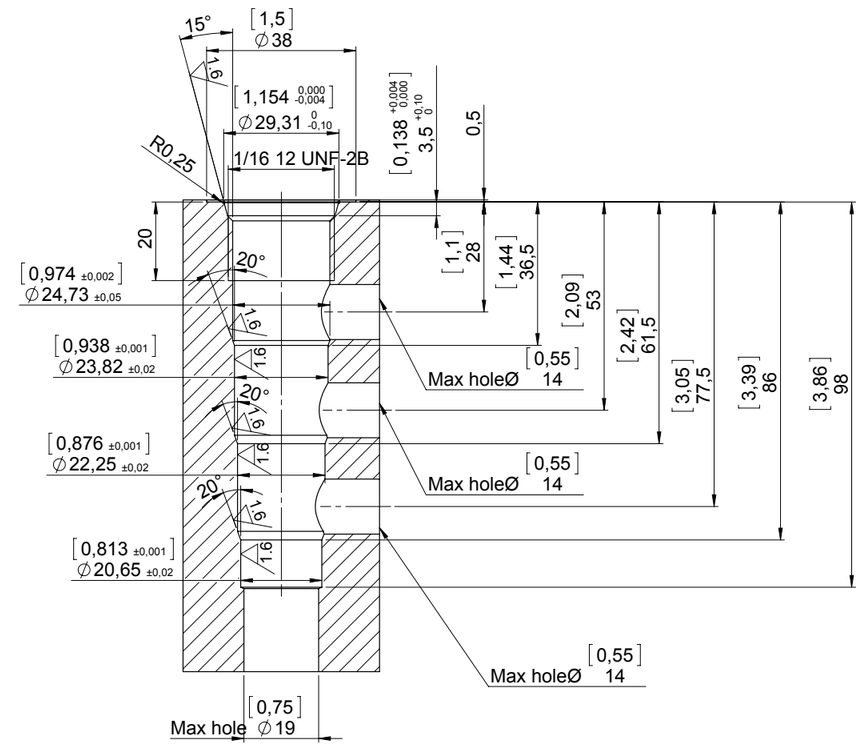

		Geometric tolerance Inches	Geometric tolerance Millimeters
General tolerance: +/-	[0,01] 0,2	◎ 0.001	◎ 0.025
		⊥ 0.001	⊥ 0.025

SCN1620 Cavity SAE 16/2 standard

Inches
Millimeters

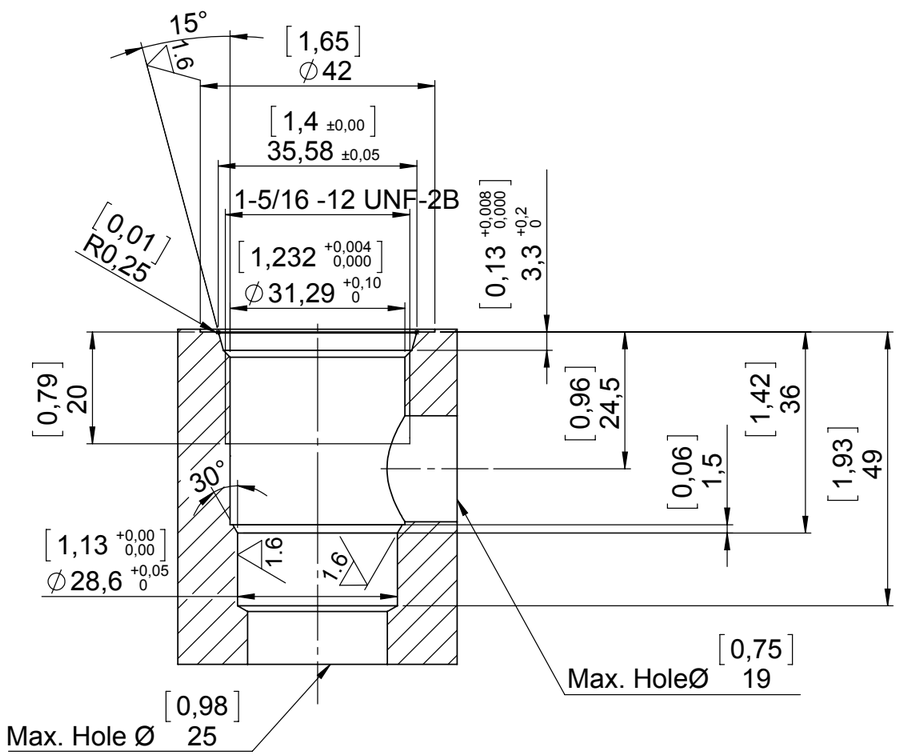

General tolerance: +/- [0,01] 0,2

Geometric tolerance Inches	
◎	0.001
⊥	0.001

Geometric tolerance Millimeters	
◎	0.025
⊥	0.025

SCS1630 Cavity SAE 16/3 short

Inches
Millimeters

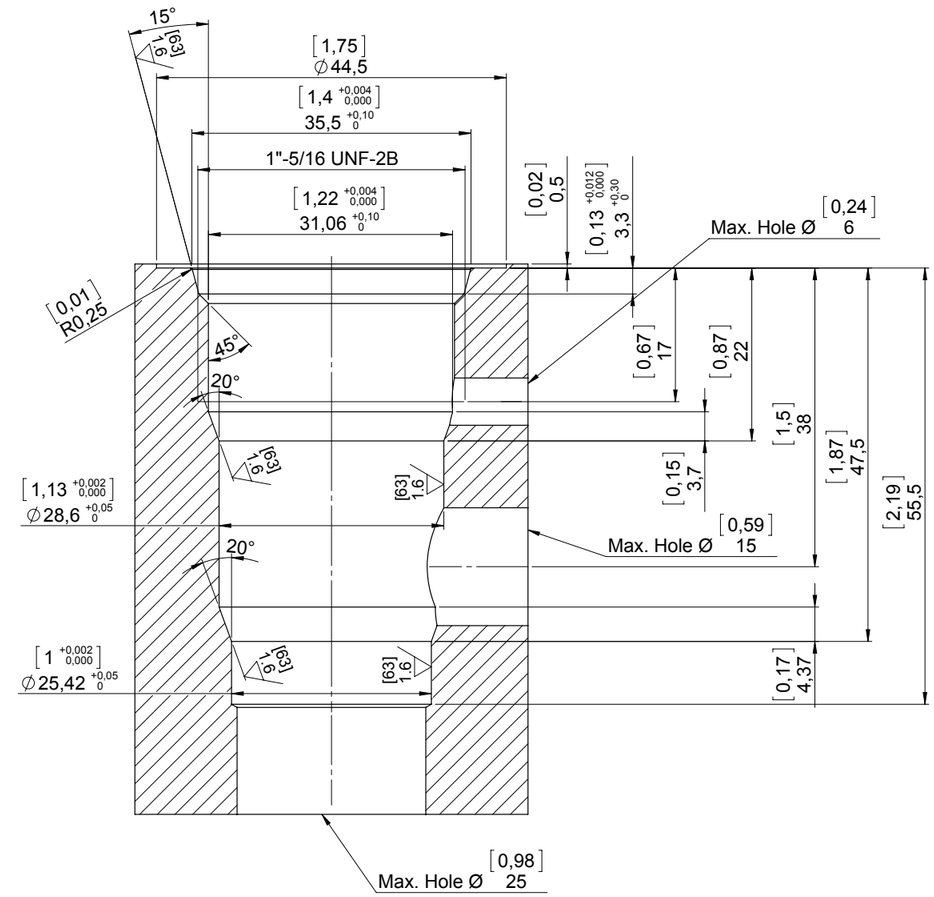

General tolerance: +/- [0,01] 0,2

Geometric tolerance Inches	
◎	0.001
⊥	0.001

Geometric tolerance Millimeters	
◎	0.025
⊥	0.025

SCN1640 Cavity SAE 16/4

Inches
Millimeters

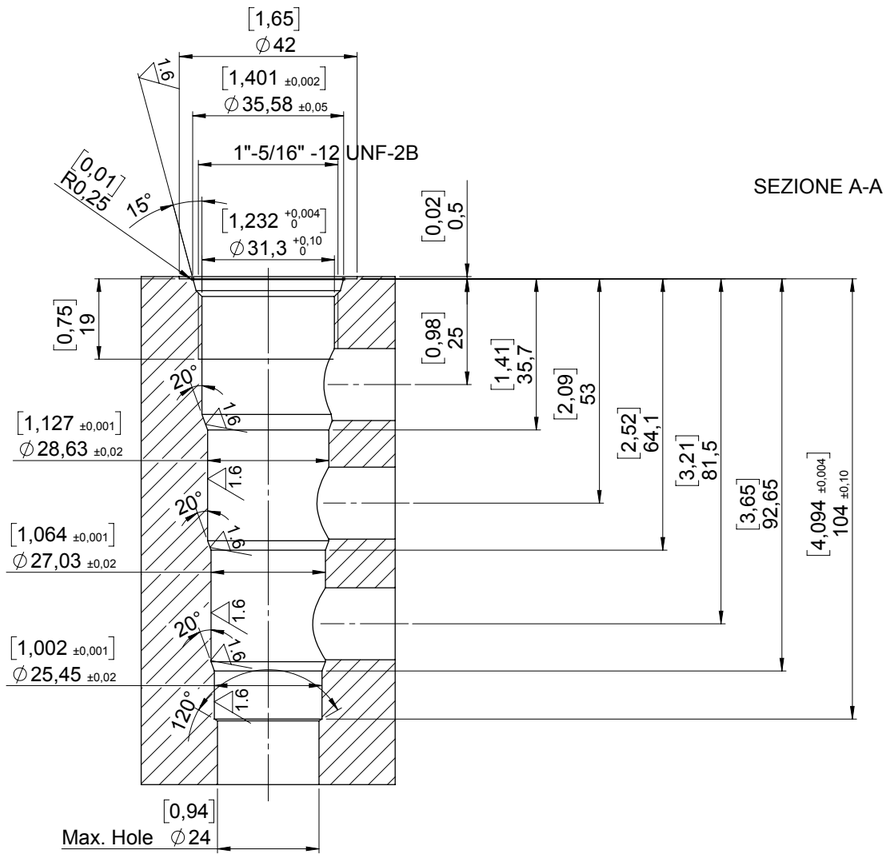

General tolerance: +/- [0,01] 0,2

Geometric tolerance Inches	
◎	0.001
⊥	0.001

Geometric tolerance Millimeters	
◎	0.025
⊥	0.025

SCN2020 Cavity SAE 20/2 standard

Inches
Millimeters

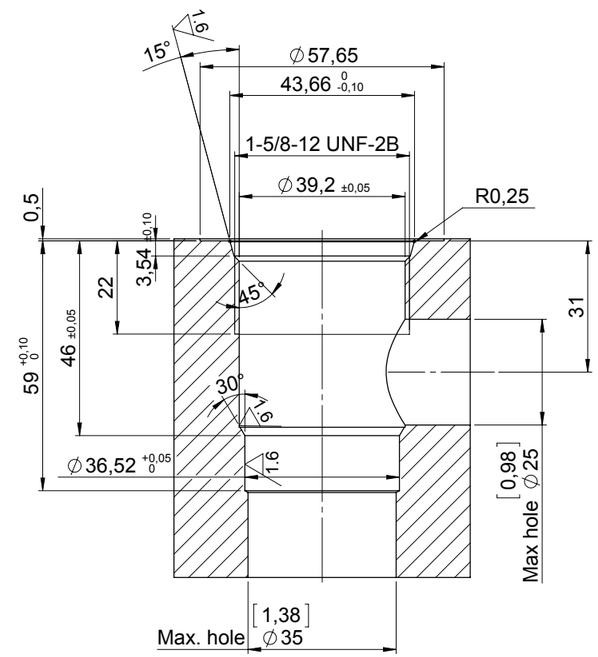

General tolerance: +/- [0,01] 0,2

Geometric tolerance Inches	
◎	0.001
⊥	0.001

Geometric tolerance Millimeters	
◎	0.025
⊥	0.025

GCZ1120 Cavity G 3/4"

Inches
Millimeters

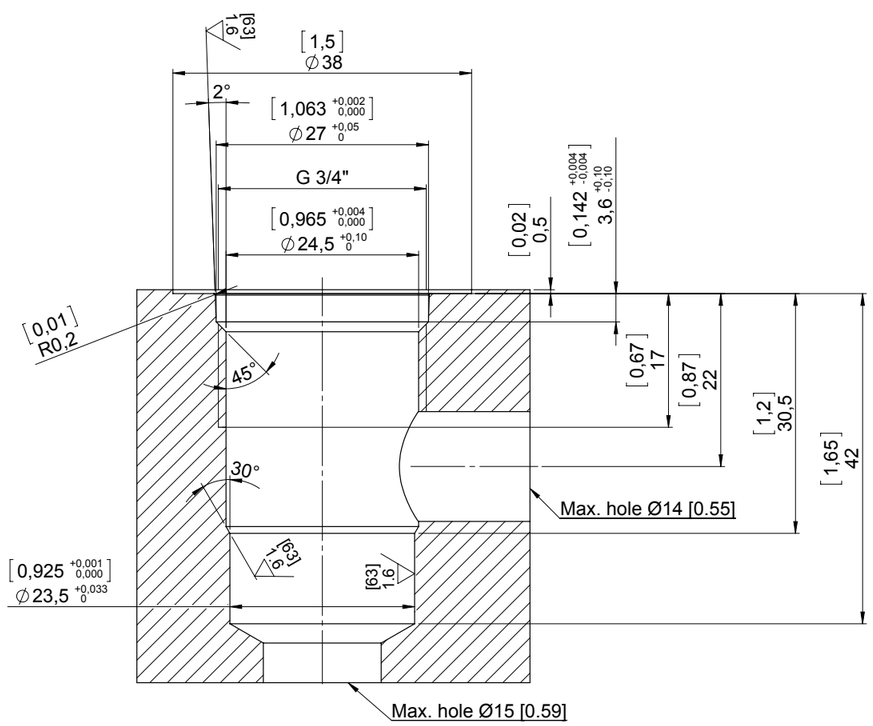

		Geometric tolerance Inches	Geometric tolerance Millimeters
General tolerance: +/-	[0,01] 0,2	◎ 0.001	◎ 0.025
		⊥ 0.001	⊥ 0.025

GCZ1320 Cavity G 1"

Inches
Millimeters

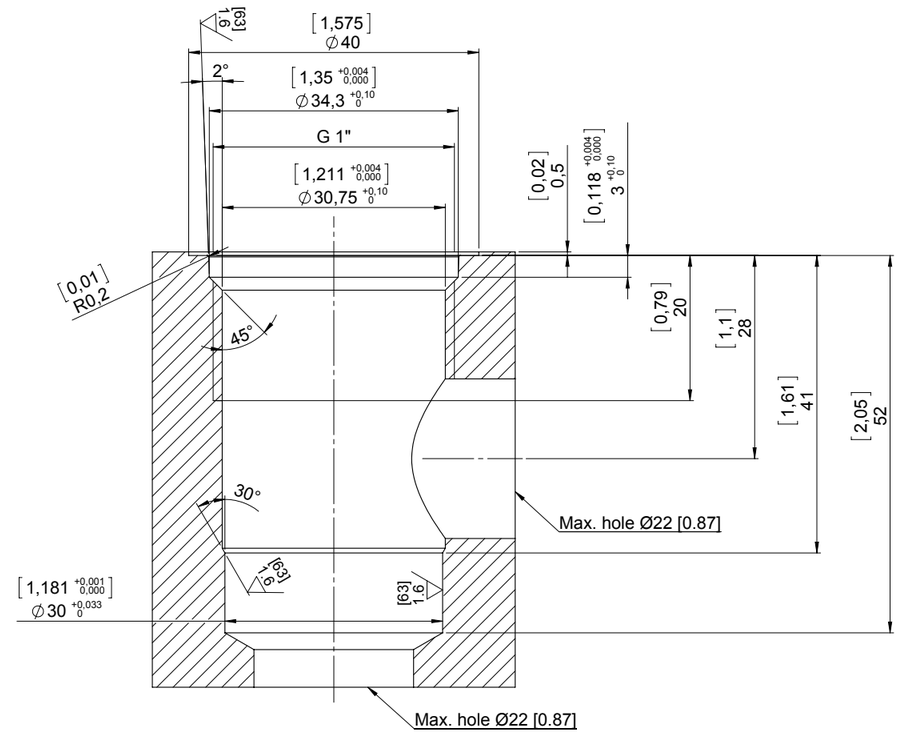

		Geometric tolerance Inches	Geometric tolerance Millimeters
General tolerance: +/-	[0,01] 0,2	◎ 0.001	◎ 0.025
		⊥ 0.001	⊥ 0.025

GCW0120

Inches
Millimeters

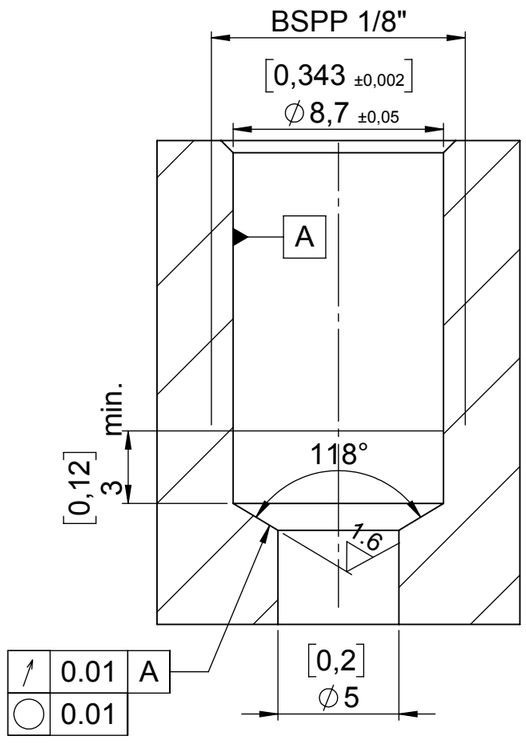

GCW0130

Inches
Millimeters

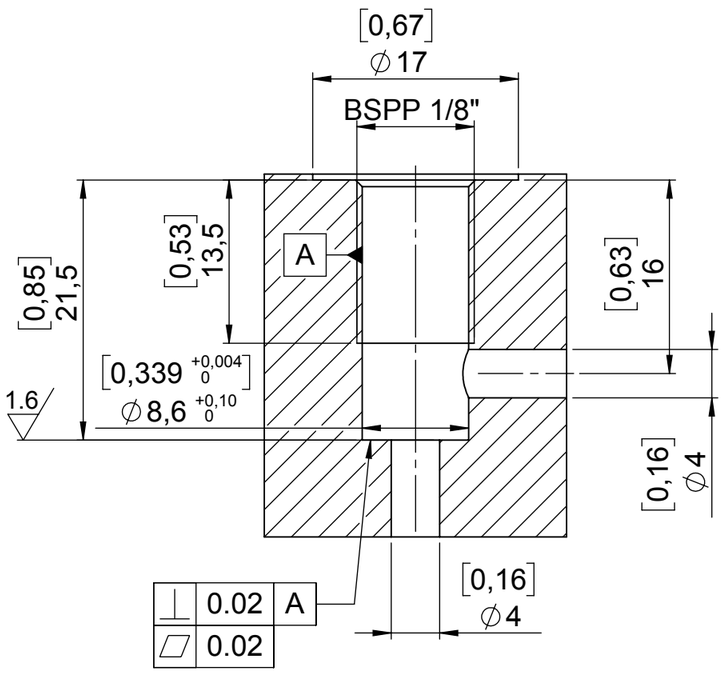

SCX0830 Cavity SAE 08/3

Inches
Millimeters

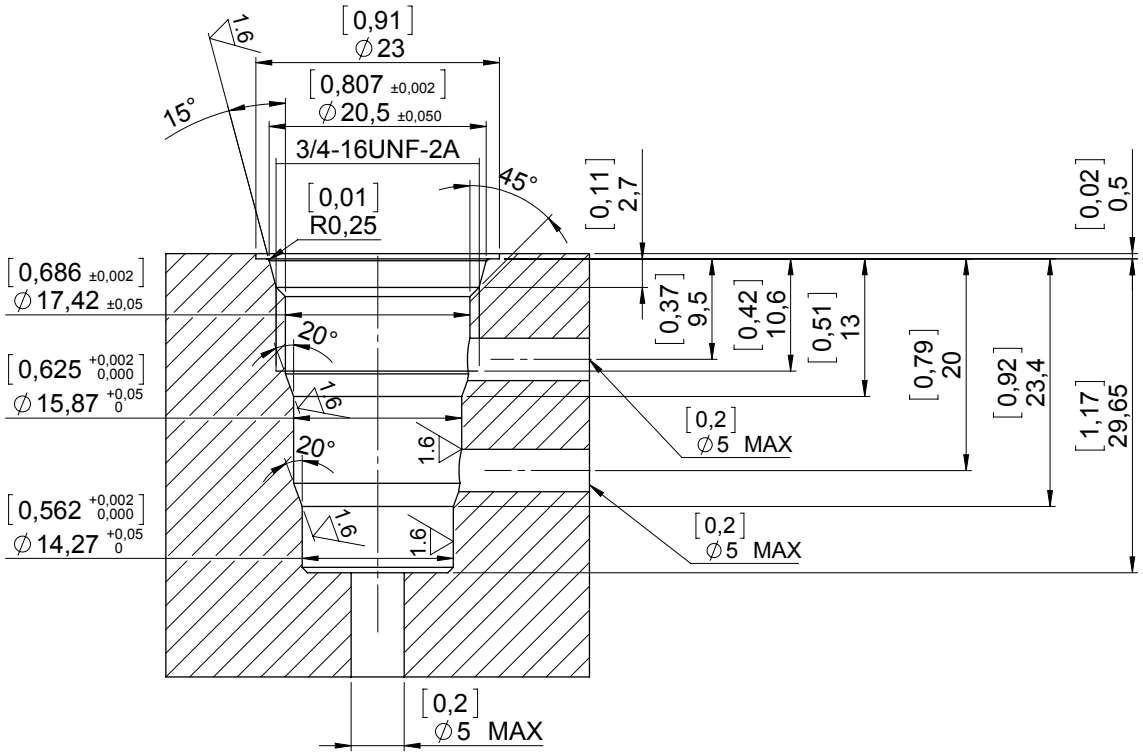

General tolerance: +/- [0,01] 0,2

Geometric tolerance Inches

◎	0.001
⊥	0.001

Geometric tolerance Millimeters

◎	0.025
⊥	0.025

Electric valves On-Off

1.

Electro-proportional valves

2.

Pressure control valves

3.

Flow control valves

4.

Directional control valves

5.

Load control valves

6.

Special solutions

7.

Coils Standard bodies Cavity

8.
9.
10.

Service
(Emergency manual override, general conditions, technical specfications)

S.

Manual override available for electric valves

The manual override described below are available for all versions of electric valves, size and dimensions do not vary according to the size of the solenoid valve.
It is important to know that these configurations are designed to perform emergency function only. Not recommended for frequent use.

Dimension and operating mode

For information on the functioning or on the various configuration options please contact our technical departement.

"Push" (P)

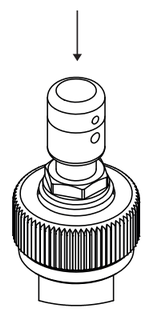

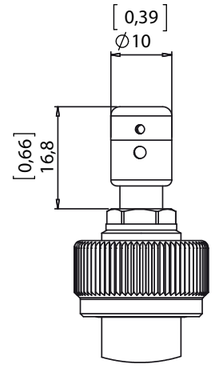

Pressing the button, the valve switches position.

"Push and Twist" (PT)

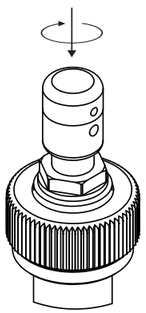

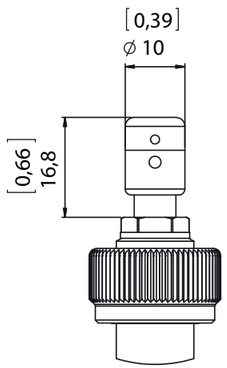

Pressing and turning the button of 90° the valve switches position and remains in position due to the detent.

"Push pin" (EC)

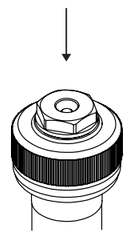

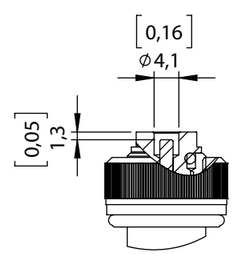

Pushing the pin, using a tool smaller than 4,1mm, the valve switches position.

"Screw in" (SV)

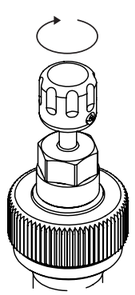

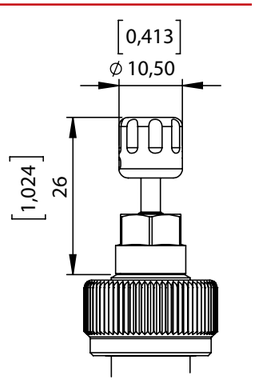

Rotating the knob clockwise the valve switches position.

"Screw out" (S)

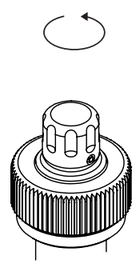

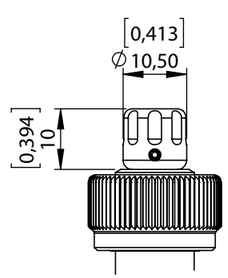

Rotating the knob anti-clockwise the valve switches position.

*"Pull" (T)**

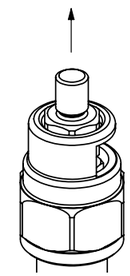

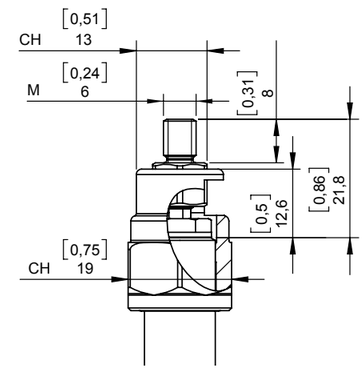

Pulling the nut the valve switches position.

***Note:** To avoid breakage do not apply a force greater than 40 N.

"Push pull" (PP)

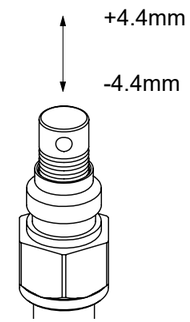

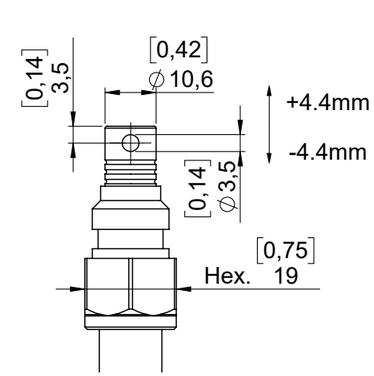

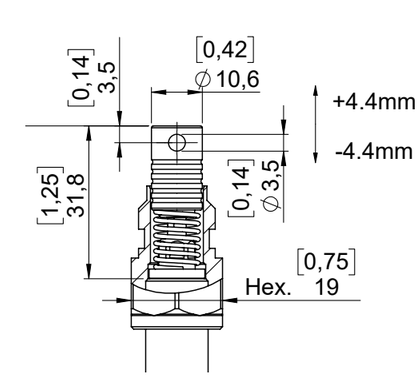

For 3 position cartridge valves, pushing or pulling the button makes the valve switch position

"Lever" (L)

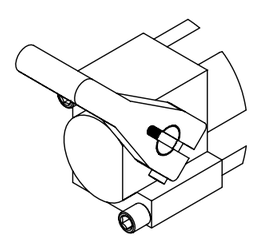

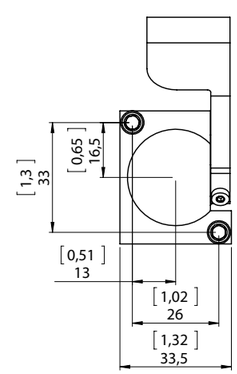

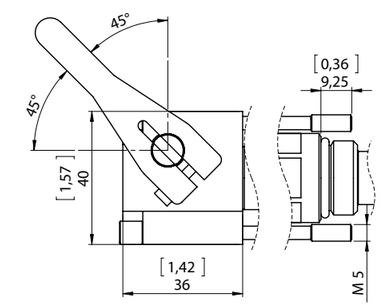

For 3 position cartridge valve, pushing or pulling the lever makes the valve switch position.

安全 / 舒适 / 节能

Safe / Comfortable / Energy-Saving

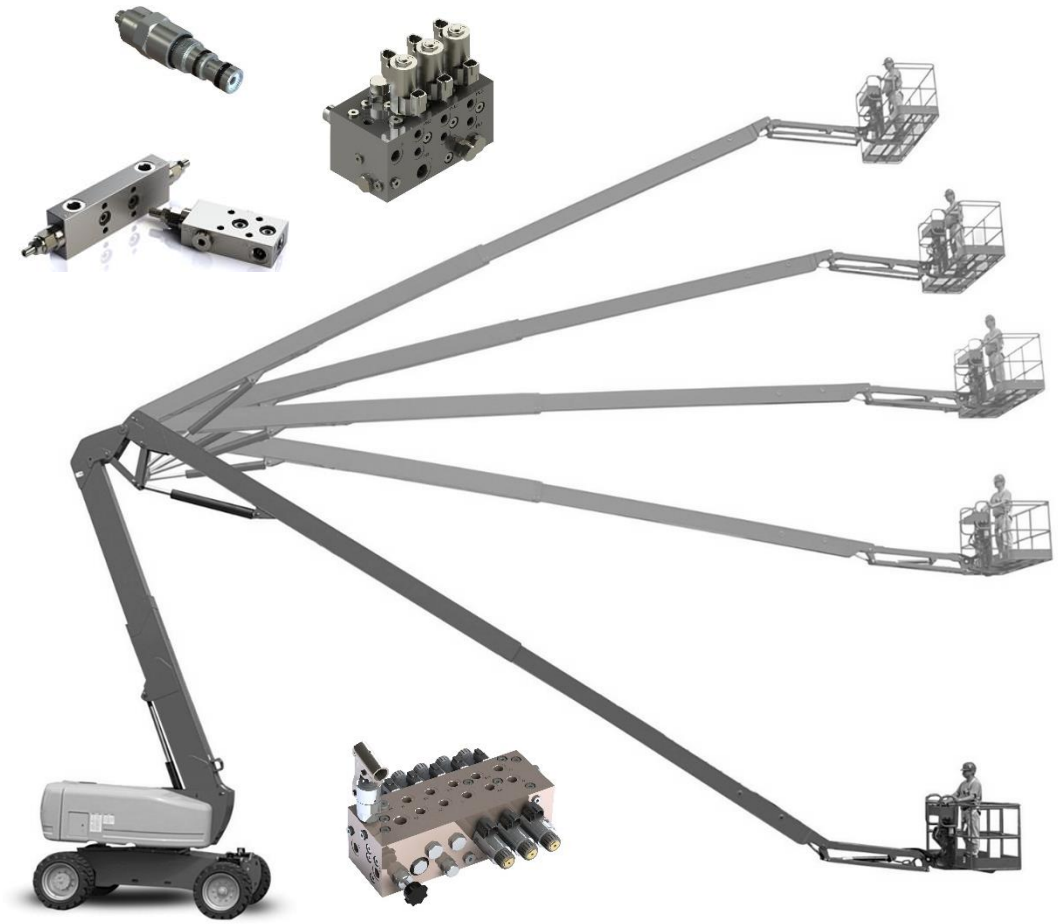

www.santhydraulic.com

www.eltfluid.com

Smart60 负载敏感电磁比例多路阀
Load Sensing Electro-Proportional Directional Valve

Smart70 流量共享电磁比例多路阀
Flow Sharing Electro-Proportional Directional Valve

www.santhydraulic.com

www.eltfluid.com